CBX800

DATALOGIC

CBX800 is an industrial gateway allowing connection of devices equipped with a standard RS232 communication interface to the most common fieldbus systems, by means of a complete range of optional modules, and to ID-NET™ high speed communication network.
CBX800 allows, with the same model, flexible interfacing of several devices (e.g. Datalogic Automation's 6K and 8K series, Hand Held Readers) to different networks.
Three serial ports and high speed ID-NET™ communication interface, always available, can be combined with a complete range of optional modules providing connectivity to standard Ethernet TCP/IP network or to the most common fieldbus systems.
CBX800 features IP65 (NEMA 4) protection class and 0 to 50 °C (32 to 122 °F) operating temperature.

HIGHLIGHTS

- Serial to Fieldbus, Ethernet TCP/IP or ID-NET™ industrial gateway
- Open architecture allows flexible interfacing to Ethernet TCP/IP, Profibus, DeviceNet, Ethernet/IP and other common networks.
- Flexible mounting and simplified wiring to speed up the installation.
- Visible Power, Communication and I/O indicators and Power On/Off switch
- Multi-language Genius™ SW Tool allows rapid device configuration.
- IP65 (NEMA 4) rated industrial design.

ADVANTAGES

- Modular and flexible industrial gateway designed to interface devices equipped with a standard RS232 communication port to several networks (e.g. Ethernet TCP/IP, industrial Fieldbus systems, ID-NET™).
- Extended connectivity to satisfy all the most common demands.
- Installation is simplified thanks to accessible through holes for mounting screws with closed box.
- Pinout standardization simplifies wiring to the appropriate terminal block
- IP65 (NEMA 4) protection class and 0 to 50 °C (32 to 122 °F) operating temperature.

APPLICATIONS

- Connection modules connect 2K, 4K, 6K, 8K and Matrix family to host system. Provide also connectivity to most important fieldbus network.

TECHNICAL DATA

Dimensions	193 x 180 x 71 mm (7.60 x 7.09 x 2.79 in.)
Weight	830 g. (29.28 oz.)
Power supply	10 to 30 VDC
Power consumption	2.5 W max
Operating temperature	0 to 50 °C (32 to 122 °F)
Storage temperature	-20 to 70 °C (-4 to 158 °F)
Humidity	90% non condensing
Protection class	IP65
Shock resistance	EN 60068-2-27 30G; 11ms; 3 shocks on each axis
Vibration resistance	EN 60068-2-6 1.5mm; 10 to 55 Hz; 2 hours on each axis
Diagnostic leds	Power On/Polarity Error, Trigger, IN2, OUT1, OUT2, Ready, Host Interface 1, Host Interface 2, ID-NET, OUT3
Communication interfaces	Auxiliary: RS232 up to 115.2 Kbit/s
	Data Source: RS232 up to 115.2 Kbit/s
	Host Interface: RS232/RS485 up to 115.2 Kbit/s
	ID-NET™ port up to 1 Mbps
	Optional Host Interface modules
Communication protocol	Datalogic Application Driver (DAD Driver)
Handshaking	Message fragmentation and flow control
Address setting	HW Switches, Genius™
Exchange memory for i/o data	Up to 128 bytes
Device programming	Windows™ based SW (Genius™) via Serial or Ethernet link
	Serial Host Mode Programming sequences
Compatible devices	All devices supporting standard RS232 communication interface

DIMENSIONS

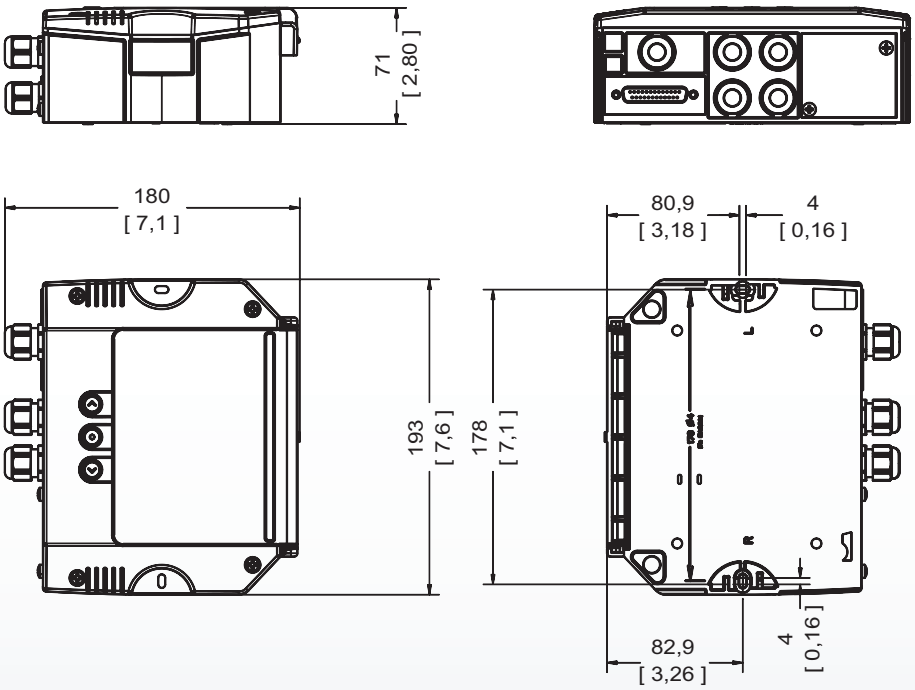

mm / inch

MODELS AND ACCESSORIES

MODELS	
Order No.	Description
93A301077	CBX800 GATEWAY
ACCESSORIES	
Order No.	Description
93ACC1851	BM200 ETHERNET TCP/IP MODULE
93ACC1852	BM210 ETHERNET TCP/IP IP65 MODULE
93ACC1810	BM300 PROFIBUS MODULE
93ACC1811	BM310 PROFIBUS IP65 MODULE
93ACC1814	BM400 DEVICENET MODULE
93ACC1812	BM500 ETHERNET/IP MODULE
93ACC1813	BM510 ETHERNET/IP IP65 MODULE
93ACC1840	BM520 ETHERNET/IP IP54 MODULE
93ACC1815	BM600 CAN OPEN MODULE
93ACC1816	BM700 PROFINET MODULE
93ACC1845	BM1100 CC-LINK MODULE
93ACC1848	BM1200 MODBUS TCP MODULE
93ACC1849	BM1210 MODBUS TCP IP65 MODULE
93ACC1821	BA100 DIN RAIL ADAPTERS
93ACC1822	BA200 BOSCH ADAPTERS
93ACC1847	BA900 TWO CABLE GLANDS PANEL
93ACC1827	ADP-FF1 GENDER CHANGER 25P F/F (5PCS)

Rev. 02, 11/2014

The company endeavours to continuously improve and renew its products; for this reason the technical data and contents of this catalogue may undergo variations without prior notice. For correct installation and use, the company can guarantee only the data indicated in the instruction manual supplied with the products. Product and Company names and logos referenced may be either trademarks or registered trademarks of their respective companies. We reserve the right to make modifications and improvements.