Smart-VS

DATALOGIC

AI enabled
MLAS - Machine Learning Assisted Setting

THE SMART VISION SENSOR ENABLED WITH A.I. AND EMPOWERED BY MACHINE LEARNING ASSISTED SETTING ALGORITHMS. SIMPLY CLEVER SOLUTION FOR ALL YOUR PRESENCE AND ORIENTATION OBJECT DETECTION APPLICATIONS

- Machine Learning Assisted Setting
- No vision Tools programming required
- No inspection threshold adjustment
- No need of skilled installers and users
- Fast and Easy Setting like standard photosensor
- Deterministic response time 50ms
- Reduced cost of ownership and maintenance
- TEACH Button and comprehensive UI with 5 status LEDs
- Electronic focus control
- 50...150mm operating distance
- Bright and visible Red LED pointer
- Powerful white polarized light illuminator
- Green/Red LED Spot for GOOD/NO GOOD part
- Ethernet point to point communication available
- Easy and Intuitive WEB Server GUI for maintenance and job setting
- Easy output interface photosensor like

APPLICATIONS

- Processing and packaging machinery
- Transport and handling lines
- Assembly lines
- Food & Beverage
- Bottling lines
- Machines for the Cosmetic and Pharmaceutical sector

ELECTRICAL FEATURES	
Power *Supply Voltage (Vdc)* *Consumption (A) Max.*	10 to 30 Vdc 0.40 - 0.14 A (4.2 W)
Communication Interface ***Ethernet*** [1]	10/100 Mbit/s
Inputs	Opto-coupled and polarity insensitive
Max. Voltage	30 Vdc
Max. Input Current	10 mA
Output Type	Push-pull, NPN or PNP, short circuit protected
Outputs	3 Outputs (DATA VALID, GOOD, NO GOOD)
V_{OUT} (I_{LOAD} = 0 mA) Max.	30 Vdc
V_{OUT} (I_{LOAD} = 100 mA) Max.	3 Vdc
I_{LOAD} Max.	100 mA

1 The embedded Ehternet interface is intended for configuration only through connection to the device IP. Point-to-Point connection is recommended.

TECHNICAL DATA

Optical and Detection Features	
Operating distance	50...150 mm
View angle	19°
FOV area @ 50 mm	22 mm (H) x 16 mm (V)
FOV area @ 150 mm	55 mm (H) x 41 mm (V)
Response Time	50 ms
Max. Image to handle (GOOD+NO GOOD)	6 images
Max pcs per second	20 pcs per second
Active Area Resolution	320x240 pixels
Illuminator	White LED polarized
Phisical Features	
Dimensions *Std SPH connector at 0°* *Std SPH connector at 90°*	H x W x L 78 x 47 x 38 mm (3.1 x 1.9 x 1.5 in) 58 x 47 x 58 mm (2.3 x 1.9 x 2.3 in)
Weight	173 g (6.1 oz)
Material	Aluminum with plastic PMMA protective window
Environmental Features	
Operating Temperature [2]	-10 to 50 °C (14 to 122 °F)
Storage Temperature	-20 to 70 °C (-4 to 148 °F)
Max. Humidity	90% non-condensing
Vibration Resistance	14 mm @ 2 to 10 Hz; 1.5 mm @ 13 to 55 Hz; 2 g @ 70 to 500 Hz; 2 hours on each axis
Shock Resistance	30 g; 11 ms; 3 shocks on each axis
Protection Class [3]	IP65 and IP67

1 The embedded Ehternet interface is intended for configuration only through connection to the device IP. Point-to-Point connection is recommended.
2 High ambient temperature applications should use metal mounting bracket for heat dissipation.
3 When correctly connected (fully tightened) to IP67 cables with seals.

DIMENSIONS

Smart-VS STRAIGHT CONNECTORS

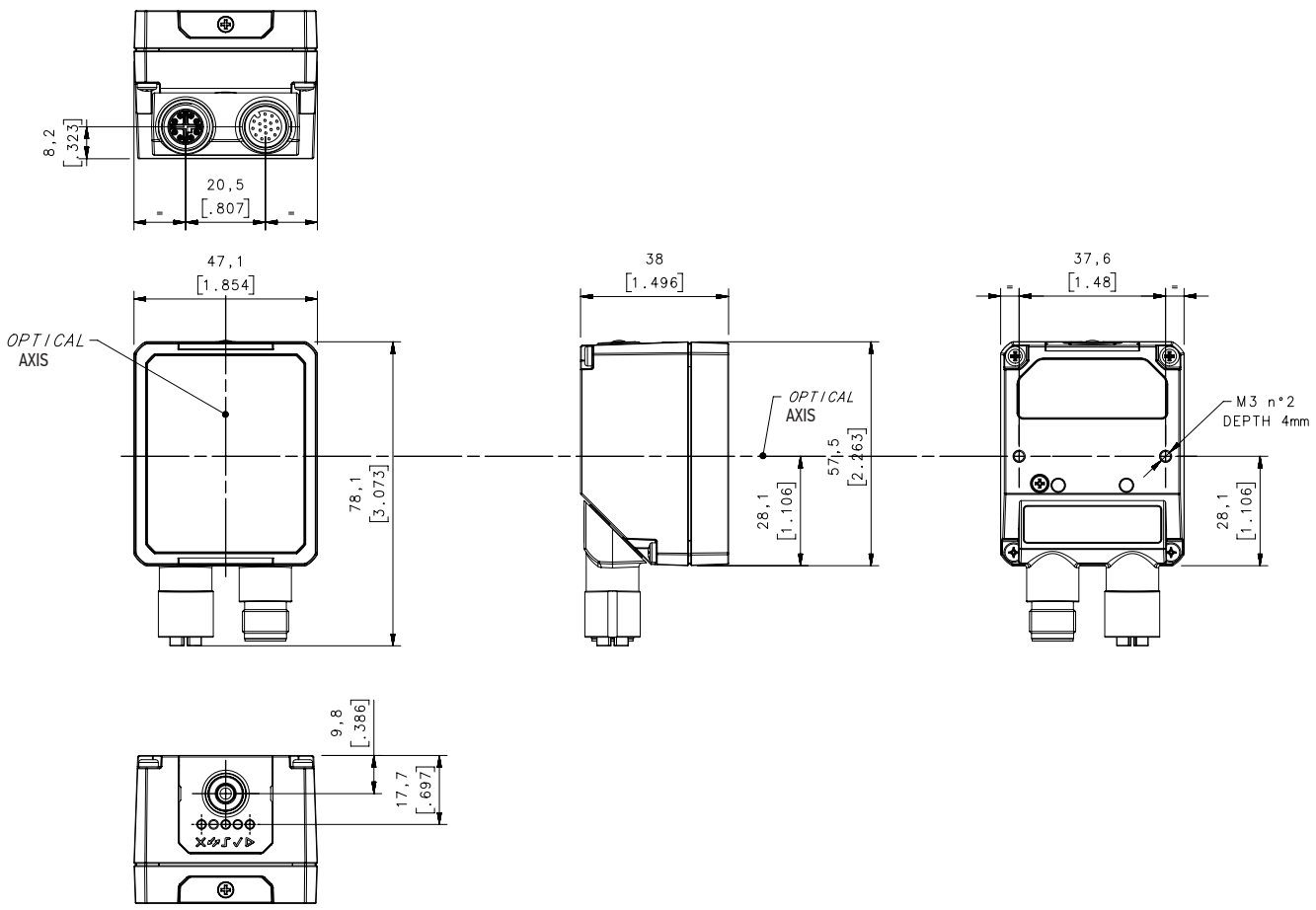

SMART-VS 90° CONNECTORS

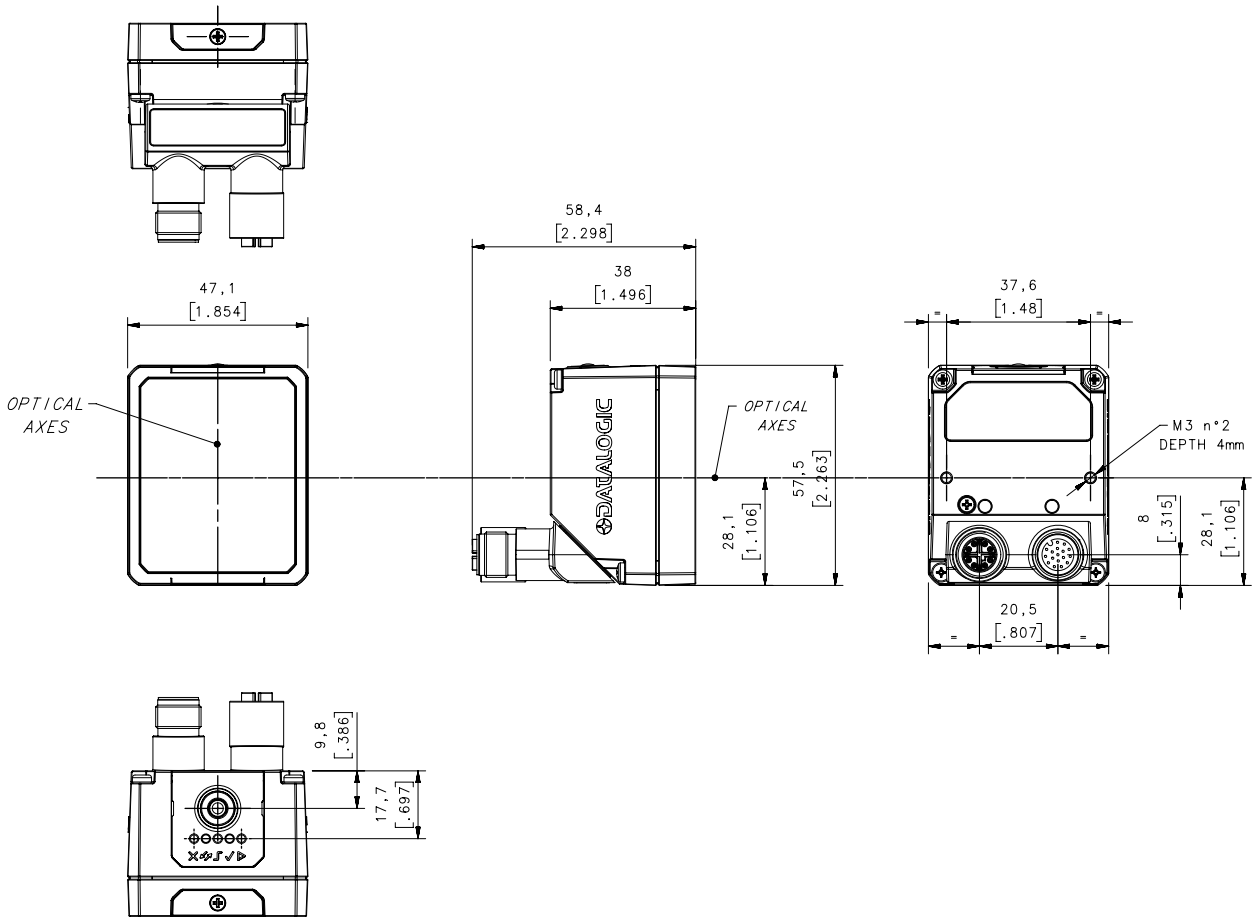

CONNECTIONS

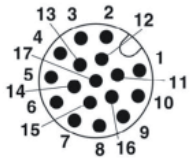

M12 17-pin Power, COM, and I/O Connector Pinout			
Pin	**Nome**	**Colore**	**Funzione**
1 2 Connector case	Vdc GND Chassis	Marrone Blu	Power supply input voltage + Power supply input voltage - Connector case provides electrical connection to the chassis
6 5 13 3	I1A I1B I2A I2B	Yellow Pink White/Green White	I1A Trigger Input A (Polarity Insensitive) I1B Trigger Input B (Polarity Insensitive) I2A Remote Teach A (Polarity Insensitive) I2B Remote Teach A (Polarity Insensitive)
9	O1*	Red	Data Valid PP
8	O2*	Grey	GOOD Output PP
16	O3*	Yellow/Brown	NO-GOOD Output PP

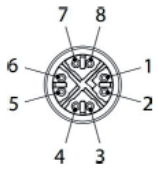

M12 8-pin Standard Ethernet Network Connector Pinout		
Pin	**Name**	**Function**
1	TX+	Transmit data (positive pin)
2	TX-	Transmit data (negative pin)
3	RX+	Receive data (positive pin)
4	RX-	Receive data (negative pin)
5	nc	Not Connected
6	nc	Not Connected
7	nc	Not Connected
8	nc	Not Connected

INDICATORS AND SETTINGS

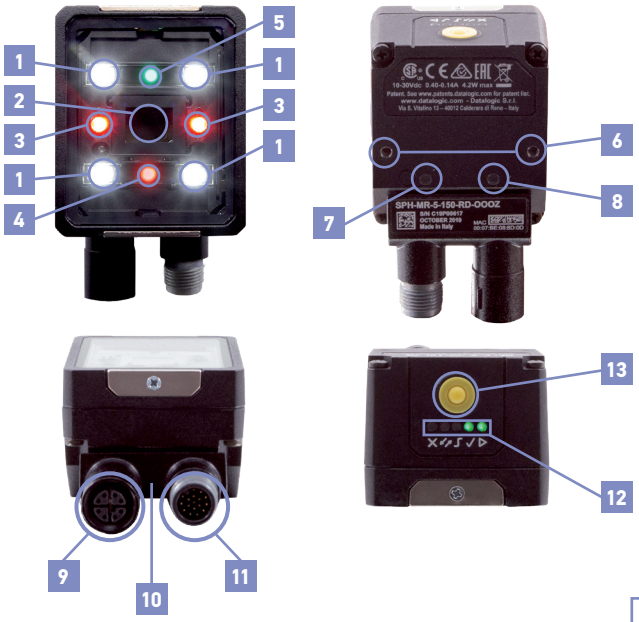

ITEM N.	DESCRIPTION
1	Illuminator with 4 powerful White LEDs with polaroid filter
2	7mm lens with automatic focus system
3	Aiming system with 2 powerful Red LEDs
4	Red Spot illuminator LED for NO GOOD detection object
5	Green Spot illuminator for GOOG detection object
6	2 holes for direct mounting or bracket
7	Blue Power Supply LED
8	Yellow Ethernet connection LED
9	M12 Ethernet X-coded female connector
10	Rotating connector block
11	M12-17 Pin Power Supply and I/O male connector
12	5 bright LED for User Interface signalization
13	Yellow TEACH-IN button for sensor set-up

HMI CONFIGURATION	
	NO GOOD object • blinking: NO GOOD object teaching • in Run phase: NO GOOD object detected
	For future use
	Trigger • trigger received
	GOOD object • blinking: GOOD object teaching • in Run phase: GOOD object detected
	Run • device in RUN phase

DETECTION DIAGRAMS

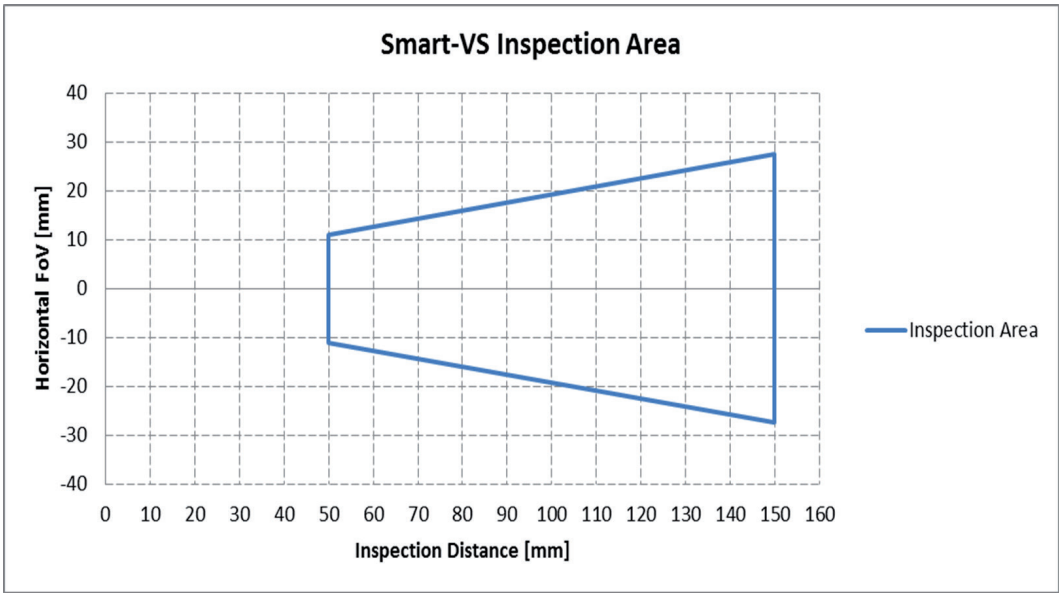

FIELD OF VIEW CALCULATION

Use the data in the following table to calculate the FOV for your application, referring to the draw and the formula below.

D_0	View angle horizontal	View angle vertical	View angle diagonal	Min Reading Distance mm
11 mm	19°	14,5°	24°	50 mm

The viewing angle has a tolerance of ±1° depending on the reading distance.

$$FOVx = 2\ [\ (d + d0) * \tan(\alpha x/2)\ ]$$

where:
FOVx = horizontal, vertical or diagonal FOV
αx = horizontal, vertical or diagonal viewing angles.
d = reading distance (in mm) from window surface to code surface
d_0 = offset (in mm) from center of lens to external window surface

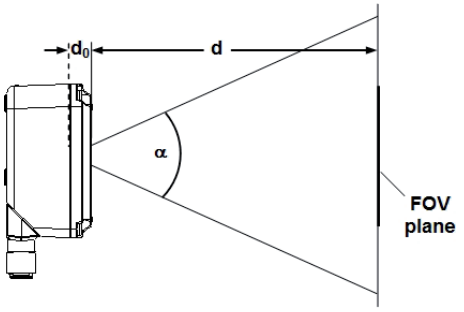

Example:
The FOV at a **reading distance of 100 mm** is:
FOVH = 2[(100mm + 11mm)*tan(19°/2)] ≅ **37mm**
FOVV = 2[(100mm + 11mm)*tan(14,5°/2)] ≅ **28mm**

OPERATING PRINCIPLES AND APPLICATIONS

Smart-VS simply clever

The Smart-VS is a Smart vision sensor simple and clever. It is simple outside since it can be handled and used like a standard photoelectric sensor but powerful and smart inside with a multiprocessor platform supporting and embedding the Artificial Intelligence technology. Its customized machine learning algorithms are empowering the detection system core enabling very complex and accurate object classification ensuring at same time a very simple setting procedure by the user

The user does not have to take care about programming or setting threshold of different vision tools, all these complex functionalities are operated by the Smart-VS "brain".

The detection function will be accomplished with three easy and fast steps. The quick step is the GOOD condition teaching the second step is no good condition teaching the third will turn the sensor in learning and normal run status ready to detect GOOD or NO GOOD objects. The user will just present the objects in front of sensor eye and push the button to change acquisition steps until the sensor will start to think and act.

The sensor is especially suited for all the applications where it is needed to solve detection between two well specified object condition classes, like presence or absence of a specific feature or object orientation respect two sides, teaching the sensor with GOOD and NO GOOD condition.

The Smart-VS principle of working is to teach the sensor with GOOD and NO GOOD object condition, this is the basic rule for any application.

This is the reason why it can be used in an effective and reliable way for the presence/absence of object features for side orientation of objects referring to proper object attributes.

This working principle makes the sensor setting easy and independent by the type, material, color of the object that needs to be detected.

Application name		Solved cases (OK / NOT OK)	
Check label presence			
Cap orientation			
Cap presence			
Check printing on label			

The main application targeted for the best use of the Smart-VS is mainly related to print and apply application where it is needed to detect presence or absence of Labels or text printing.

Liquid filler machineries where it is needed to detect the presence/absence of any kind of cap on any kind of bottles, vials, flasks, phials of any material, does not matter if made of glass, plastic or with bright dark color shiny surfaces and different dimensions. Just make the sensor teach and learn the GOOD/NO GOOD condition and it will work. You do not need to set vision tools, sensitivity thresholds, image exposition, focus, sensor positioning or sensor sensitivity.

Bottling machines where it is needed to check if the label is present or not on the object making the sensor learning the presence/absence and then make it work immediately without additional settings, just pressing a push button or building up different receipts for different formats with an effective and easy WEB GUI interface.

Application name	
Check label presence	
Cap orientation	
Cap presence	
Check printing on label	

A great value for all the applications

The Smart-VS redefines the standard detection eliminating all the concerns regarding the use of standard sensors about unstable detection or complex installation layouts to perform the presence/absence or orientation applications, a Smart-VS based system will ensure:

- more stability in terms of different object materials and shape
- excellent stability on glass and metal parts
- more simple system installation
- more flexibility and adaptability about different production format
- easy setting avoiding more expensive and complex devices
- lower cost of ownership and maintenance

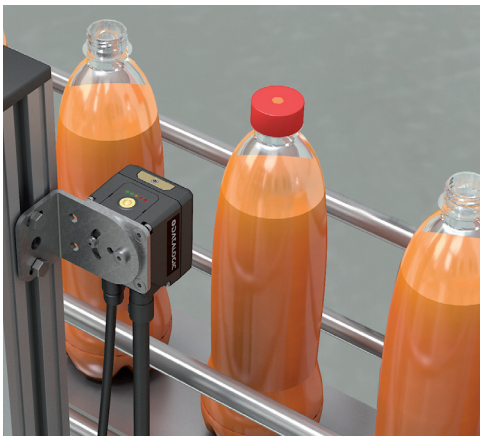

SMART-VS SETTING METHODS

Easy and Comprehensive system integration

The Smart-VS is very easy and simple to integrate in any application, it can be implemented like a sensor product, but it is much simpler than a smart camera or an ordinary smart sensor.

It is needed to provide a trigger signal by machine electrical phase or an external simple sensor or an encoder. The PC or Ethernet based terminal is an option needed to change configuration of the sensor (once a time) or for more complex set-up where it is needed to change and/or add job setting through the web interface with a browser, in most cases the need to have this connection is not necessary.
The web interface can be a useful tool in case of trouble shooting

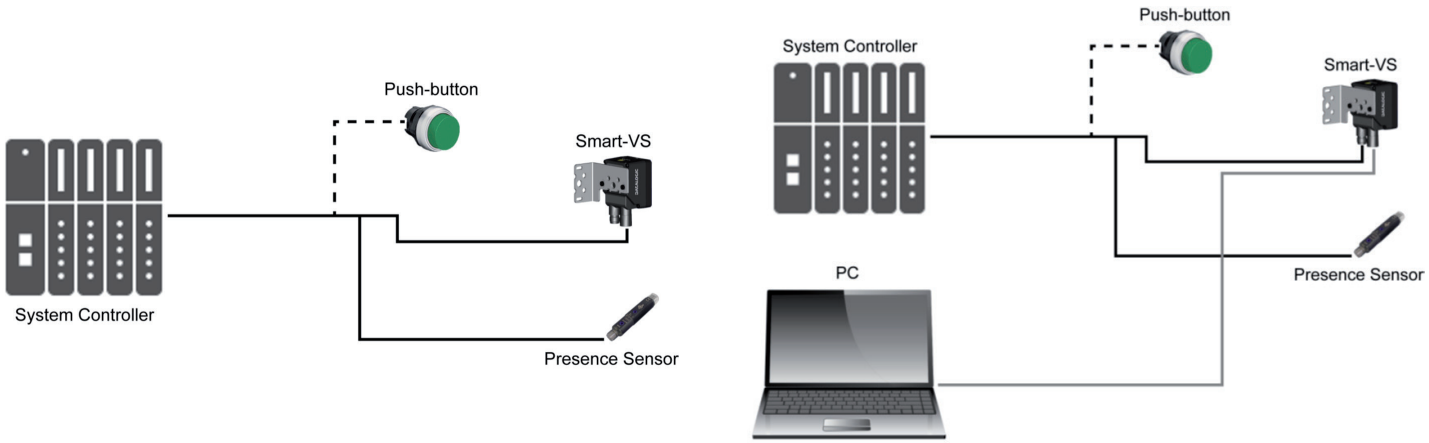

WEB INTERFACE

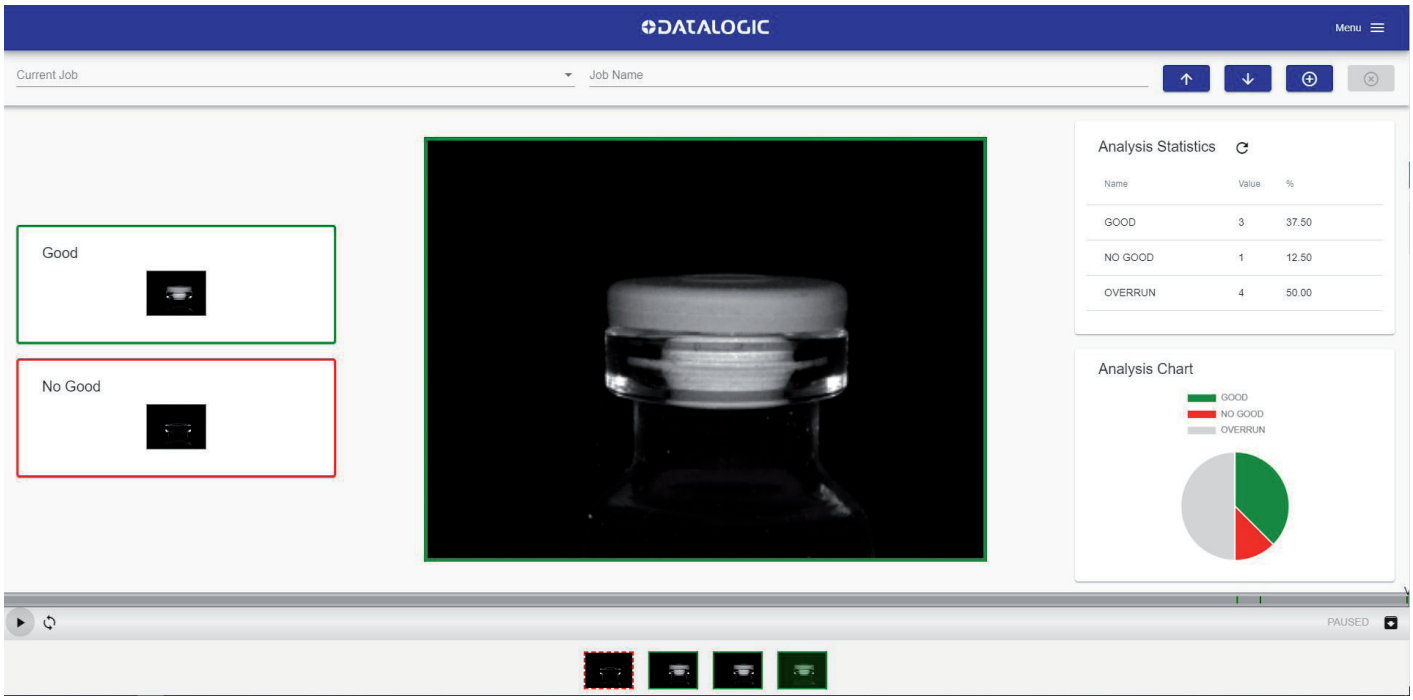

The Smart-VS is provided of a WEB Server User interface for an easy set-up and setting. This is a good option feature when it is needed to setup and change different production jobs depending on variable production format. The information are complete and shown in a clear layout.

MODEL SELECTION AND ORDER INFORMATION

MODEL	DESCRIPTION	OPTIC	ILLUMINATOR	I/O	ORDER N°
Smart-VS-MR-5-150-WH-O	SVS WP 150mm OUT	7mm	White polarized	3Out + 2In + ETH	959971320

ACCESSORIES

CATEGORY	PART NUMBER	DESCRIPTION
Cables	93A050076	CAB-GD03 M12 F/L 3M Free wires
	93A050077	CAB-GD05 M12 F/L 5M Free wires
	93A050122	M12-IP67 GIGA Ethernet Cable X-Coded (1M)
	93A050123	M12-IP67 GIGA Ethernet Cable X-Coded (3M)
	93A050124	M12-IP67 GIGA Ethernet Cable X-Coded (5M)
	93A050128	Adapter Cable GIGA Ethernet X-Coded M12 to RJ45
	93A050129	Adapter Cable GIGA Ethernet X-Coded M12 to D-Coded
Bracket	93ACC0230	BK-22-000 Fixing Bracket M220 Body

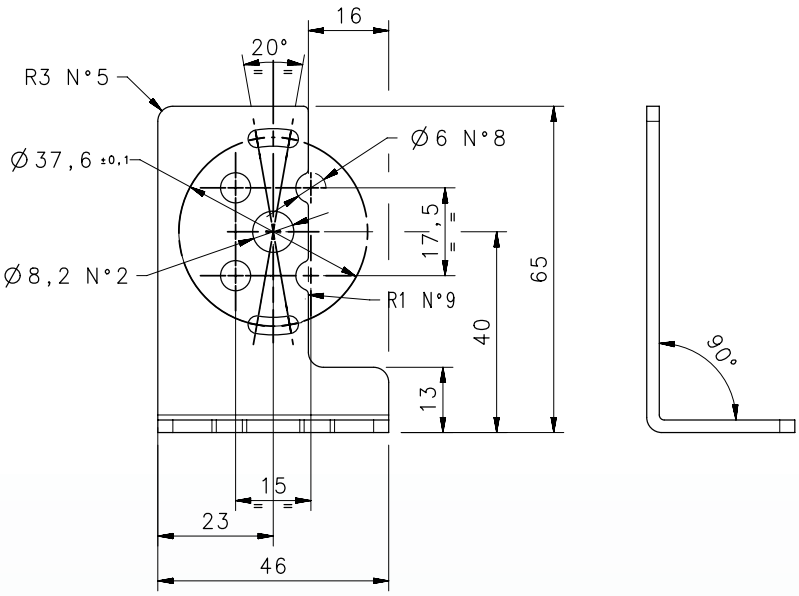

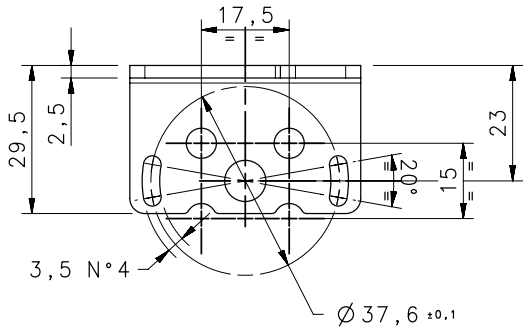

BK-22-000 Fixing Bracket

Rev. 00, 04/2020

DATALOGIC PRODUCT OFFERING

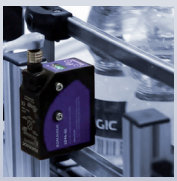
Sensors

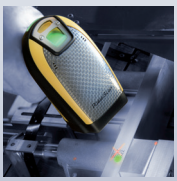
Hand Held scanners

Mobile Computers

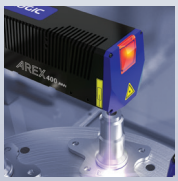
Laser Marking Systems

Safety Laser Scanner

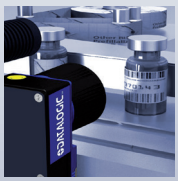
Vision Systems

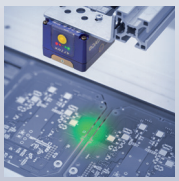
Stationary Industrial Scanners

Safety Light Curtains

The company endeavours to continuously improve and renew its products; for this reason the technical data and contents of this catalogue may undergo variations without prior notice. For correct installation and use, the company can guarantee only the data indicated in the instruction manual supplied with the products. Product and Company names and logos referenced may be either trademarks or registered trademarks of their respective companies. We reserve the right to make modifications and improvements.