MATRIX 320™

Top performing 2D reader to empower shop floor and intralogistic traceability

Matrix 320 image based code reader has been designed to EMPOWER TRACEABILITY applications providing benefits for End Users and Machine Builders. Matrix 320 brilliantly solves traceabilityapplications in intralogistics, distribution, 3PL, retail logistics and shop floor.

Matrix 320 offers a COMPLETE SOLUTION and TOP PERFORMANCE to achieve higher productivity at the best price/performance ratio thanks to its superior 2MP sensor (1920×1080 pixels with a 16:9 form factor), achieving an extra large Field of View (FOV) on horizontal axis that competes against 3MP readers.

Matrix 320 has excellent reading performance on label and high resolution DPM thanks to powerful Smart configurable lighting allowing 3 color options able to solve extreme challenging traceability applications.
To boost productivity in Intralogistics and Logistics segments, hands free operations enjoy higher performance thanks to Matrix 320 snappy reactivity and its outstanding Depth of Field (DOF).
Matrix 320 provides highest market application flexibility thanks to a modular design, a reduced number of models complemented by a complete portfolio of lenses, lightings, filters, accessories.

Embedded electronic focus dramatically reduces installation time and allows easy reconfiguration improving production flexibility in line with Industry 4.0 requirements. Matrix 320 is very easy to install thanks to its improved integrated aiming system, X-Press button HMI and DL.Code software powered by easy and intuitive autolearning/autosetup features.
Full industrial connectivity, overall compactness, rotating connectors and top industrial grade make Matrix 320 extremely easy to fit into every industrial environment. New configurable 360-degree multicolor read feedback and Green/Red Spot technology provide an outstanding visual feedback.
Performance Analysis is also simplified by a new Web interface to monitor the reader with a complete suite of Diagnostics that leverages a new generation of FTP image saving.

Matrix 320 2MP models compliment the current Matrix family of Matrix 120 and Matrix 220, once again establishing the Datalogic leadership in Stationary Industrial Scanners.

HIGHLIGHTS

- Innovative 2MP sensor (1920 × 1080 pixels with 16:9 form factor) performs outstanding Depth of Field (DOF) and Horizontal Field of View (FOV_H)
- Smart configurable lighting solutions allowing 3 color options in two formats
- Electronic focus adjustment
- Covers and filters accessories for easy stock management
- New Generation FTP Image saving
- Full industrial connectivity
- New configurable 360 degree multicolor visual feedback
- Top Industrial grade

APPLICATIONS

Manufacturing
Automotive, Food & Beverage, Pharmaceutical, Electronics, General Manufacturing
- Direct Part Marking Reading
- Component and Part Traceability
- Wip Traceability (Automatic)
- Print & Apply
- Secondary Packaging Traceability
- End of Line Traceability

Manufacturing, Transportation and Logistics, Retail
Intralogistics Automation, Automated Warehouse, Distribution Center
- Inbound, Pallet Picking (Fork Lift)
- Print & Apply verification (Re-labelling)
- Depalletizing, Part Traceability
- Order Fulfillment (Automatic, Manual)
- Palletizing (Automatic, Manual), Cage Preparation
- Pallet Traceability, Pallet Wrapping
- Retrieval for outbound (Forklift)
- Reverse Logistics

TECHNICAL DATA

	14 Led Illuminator Model	36 Led Illuminator Model
Sensor	Image resolution 2.0 Mpixel (1920 x 1080) 16:9 form factor - 1/3'' CMOS global shutter	
Frame Rate	60 frames/s	
Reading range	Minimum: 35 mm Maximum: 1000 mm	Minimum: 70 mm Maximum: 1500 mm
Optical models (Viewing angles)	Liquid Lens 9mm (34°), Liquid Lens 16mm (20°)	
Optical Focus Control	Electronic focus control	
Illumination	Internal illuminators colors: Blue, Red, White lights Internal illuminators power: High Power 14 LEDs, Very High Power 36 LEDs	
Readable Symbologies	1D Codes: all standard 1 dimensional symbologies 2D Codes: Data Matrix, QR Code, Micro QR, MAXICODE, Aztec, Dot code Postal Codes: Australia Post, Royal Mail, Kix code, Japan Post, PLANET, POSTNET (+BB), Intelligent Mail, Swedish Post and many more	
Code Quality Metrics	1D CQ Standard: ISO/IEC 15416 2D CQ Standard: ISO/IEC 16022/18004, ISO/IEC 29158 (AIM-DPM), ISO/IEC 15415	
Power Supply	24 Vdc ± 10%	
Max Power Consumption	0.42 A, 10 W max	0.62 A, 15 W max.
Protection Class EN60529	IP65 and IP67	
Operating Temperature	-0 to 45°C (32 to 113 °F)	
Storage Temperature	-20 to 70 °C (-4 to 158 °F)	
Case Material	Aluminium case and plastic protective window cover	
Dimensions	H 108,7 x W 54 x L 55,5 mm (4.3 x 2.1 x 2.2 in) Connector at 0° H 88 x W 54 x L 75,6 mm (4.3 x 2.1 x 2.2 in) Connector at 90°	H 115,5 x W 126 x L 70,3 mm (4.6 x 4.9 x 2.8 in) Connector at 0° H 101 x W 126 x L 90,7 mm (4.6 x 4.9 x 2.8 in) Connector at 90°
Weight	380 gr (13.4 oz)	
Sulfur gas resistance	Available for all models according to ISO EN 60068-2-43	
ESD Safe	YES, will be available as front cover accessory	
YAG Laser Protection	YES, available as filter accessory (compatible with ESD cover)	
Flexible cables	YES, available as accessories	
Polarizing Filter	Polarizer cover accessory	
Embedded communication interfaces	- Ethernet 10/100/1000 Mbit/s: TCP/IP, UDP, FTP and Fieldbus PROFINET IO, Ethernet IP, Modbus TCP - Serial RS232/RS422FD up to 115.2 Kbit/s + Serial Aux RS232 up to 115.2 Kbit/s - OPC UA	
Reader Networking	Datalogic ID-NET™	
Connectivity Modes	Pass Through, Master/Slave, Ethernet point to point	
Digital Inputs	2 inputs opto-coupled and polarity insensitive Max. Voltage 30 Vdc Max. Input Current 10 mA	
Digital Outputs	3 Outputs: configurable NPN, PNP and PP short-circuit protected VOUT (ILOAD = 0 mA) max. 24 Vdc VOUT (ILOAD = 100 mA) max. 3 Vdc ILOAD max. 100mA Using CBX connection box the first 2 outputs are opto-coupled	
Aiming System	Laser cross red projection aiming	
User Interface	Configurable 360 degree multicolor visual feedback Green spot and Red spot LEDs X-PRESS™ Human Machine Interface Beeper, X-PRESS™ Push Button, 7 LEDs (Status, Communication , Trigger, Good Read, Ready, Power on, Network) Web Monitoring Interface	
Device Programming	DL.CODE™ Windows-based software (programming via Ethernet or Serial Interface) with Javascript output formatter Serial Host Mode programming X-PRESS™ Human Machine Interface	
Warranty	2-Year Factory Warranty	

DIMENSIONS

MATRIX 320 14 LED ILLUMINATOR - STRAIGHT 0° CONNECTORS

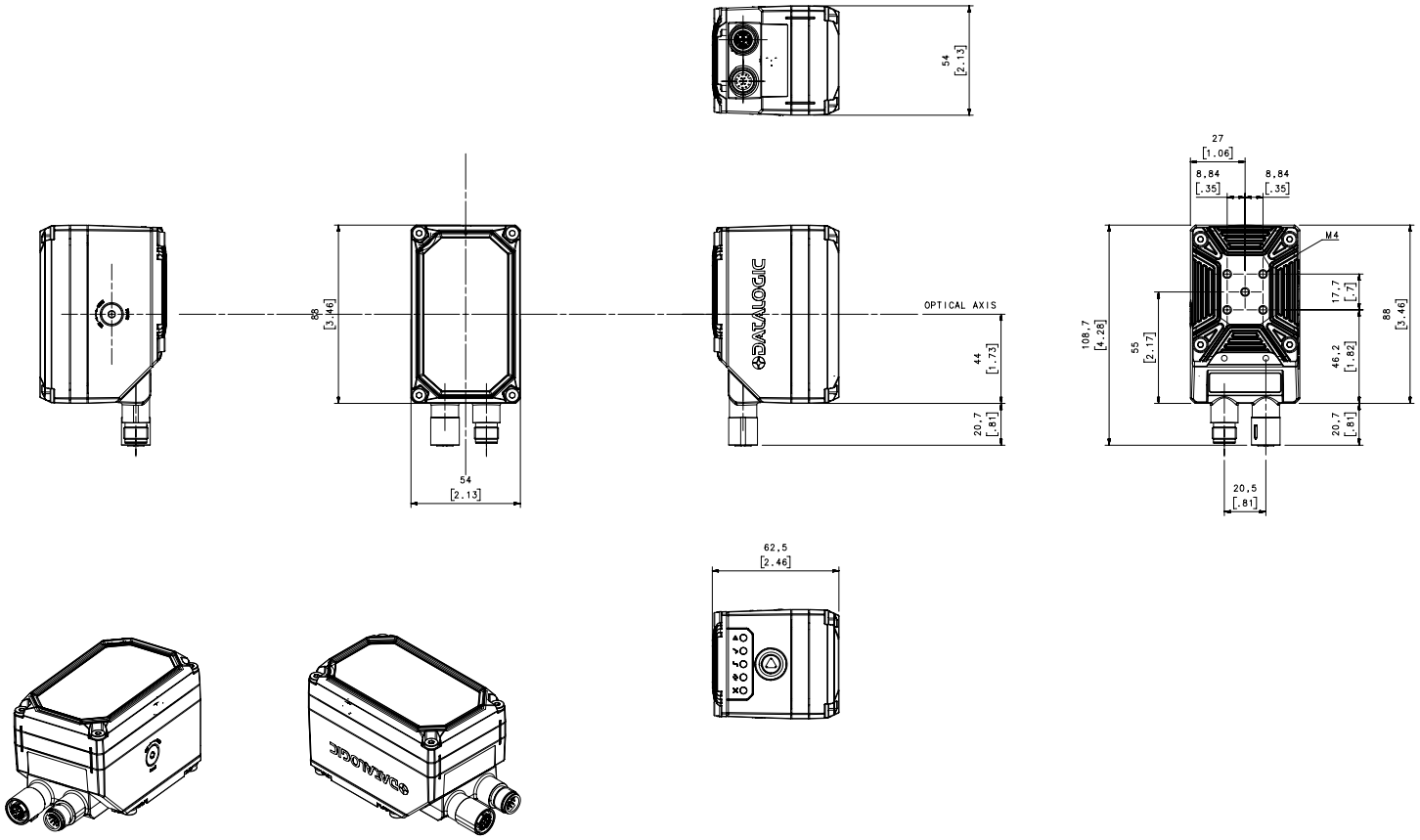

MATRIX 320 14 LED ILLUMINATOR - 90° CONNECTORS

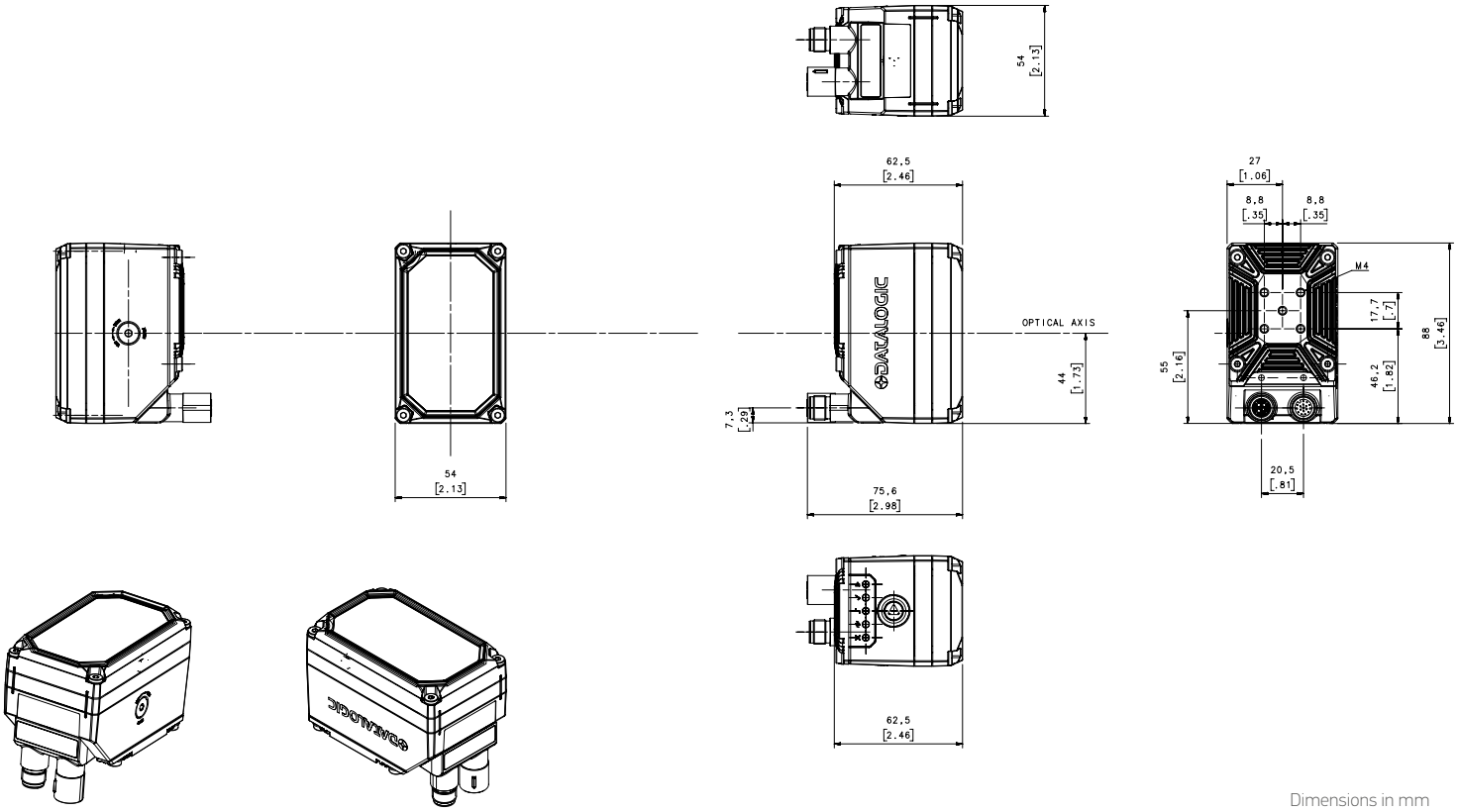

Dimensions in mm

DIMENSIONS

MATRIX 320 36 LED ILLUMINATOR - STRAIGHT 0° CONNECTORS

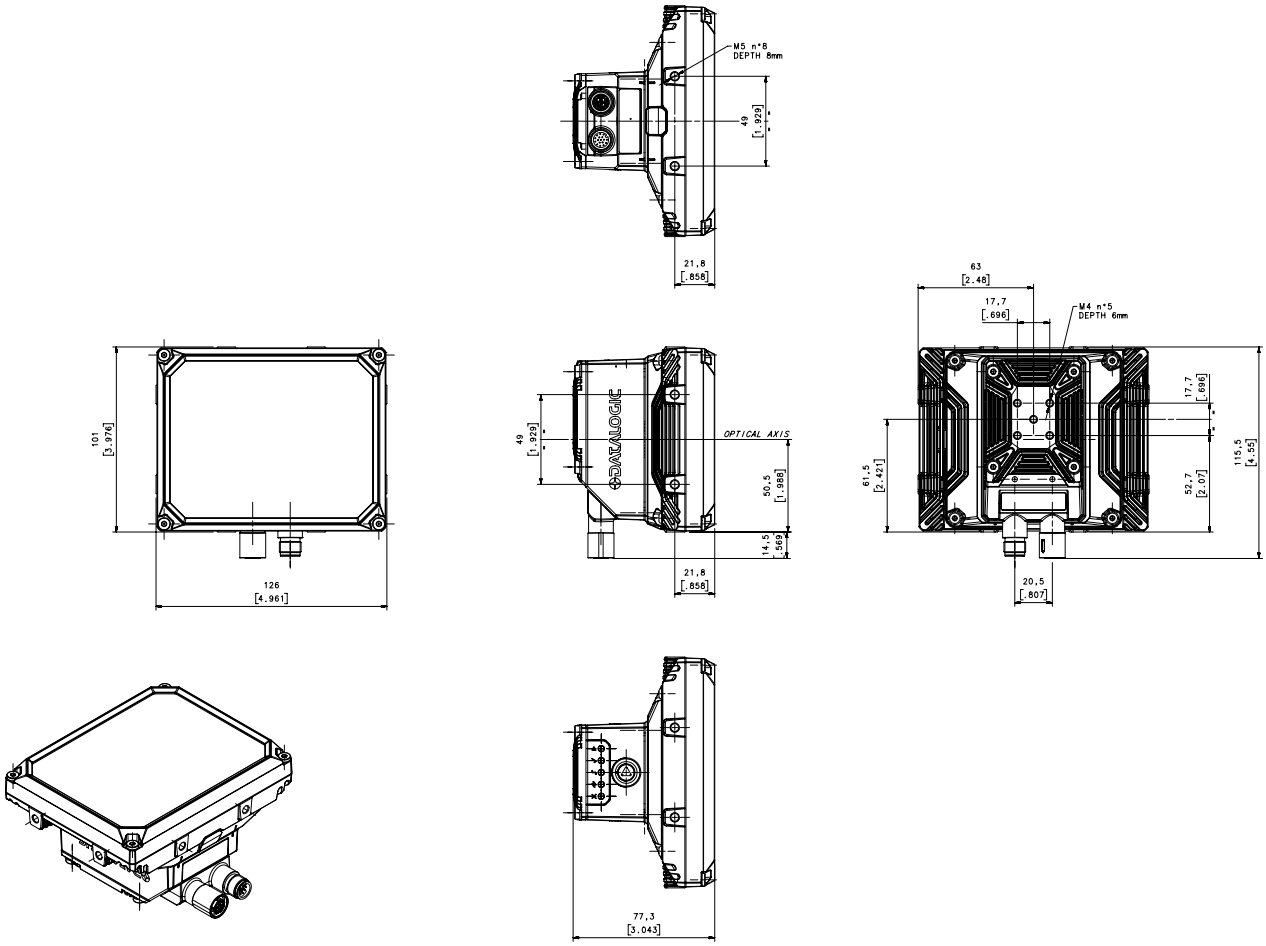

MATRIX 320 36 LED ILLUMINATOR - 90° CONNECTORS

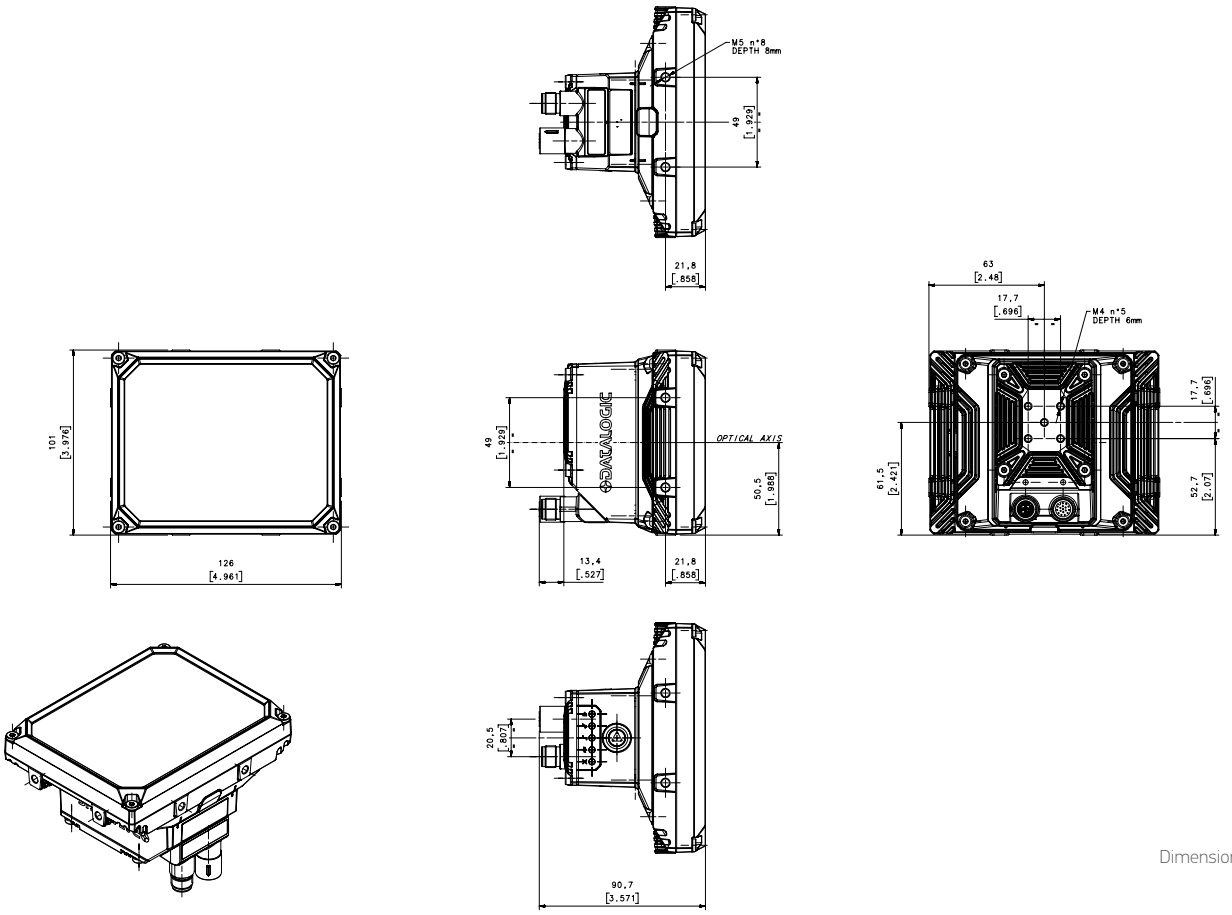

Dimensions in mm

MODELS

P/N	DESCRIPTION	OPTICAL MODELS		ILLUMINATOR POWER		ILLUMINATOR LIGHT COLOR		
		Liquid lens 9 mm	Liquid lens 16 mm	14 Led high power	36 Led very high power	Blue	Red	White
938100020	Matrix 320 705-330 LL9 14L 45D RED	x		x			x	
938100021	Matrix 320 706-330 LL9 14L 45D WHT	x		x				x
938100022	Matrix 320 707-330 LL9 14L 45D BLU	x		x		x		
938100023	Matrix 320 709-430 LL16 14L 25D RED		x	x			x	
938100024	Matrix 320 710-430 LL16 14L 25D WHT		x	x				x
938100025	Matrix 320 711-430 LL16 14L 25D BLU		x	x		x		
938100029	Matrix 320 721-330 LL9 36L 45D RED	x			x		x	
938100030	Matrix 320 722-330 LL9 36L 45D WHT	x			x			x
938100031	Matrix 320 723-330 LL9 36L 45D BLU	x			x	x		
938100032	Matrix 320 725-430 LL16 36L 25D RED		x		x		x	
938100033	Matrix 320 726-430 LL16 36L 25D WHT		x		x			x
938100034	Matrix 320 727-430 LL16 36L 25D BLU		x		x	x		

Matrix 320 7 X X - X X 0

Sensor
7 = 2MP

Internal Illuminators
05 = 14 LED TIR Lens Aperture 45 Degree Red Light
06 = 14 LED TIR Lens Aperture 45 Degree White Light
07 = 14 LED TIR Lens Aperture 45 Degree Blue Light
09 = 14 LED TIR Lens Aperture 25 Degree Red Light
10 = 14 LED TIR Lens Aperture 25 Degree White Light
11 = 14 LED TIR Lens Aperture 25 Degree Blue Light
21 = 36 LED TIR Lens Aperture 45 Degree Red Light
22 = 36 LED TIR Lens Aperture 45 Degree White Light
23 = 36 LED TIR Lens Aperture 45 Degree Blue Light
25 = 36 LED TIR Lens Aperture 25 Degree Red Light
26 = 36 LED TIR Lens Aperture 25 Degree White Light
27 = 36 LED TIR Lens Aperture 25 Degree Blue Light

Options
0 = Standard

Interface
3 = Gigabit Ethernet (GIGE)

Optics
3 = 9mm electronic focus control (liquid lens)
4 = 16mm electronic focus control (liquid lens)

14 LED ILLUMINATOR MODELS AND LED CHAIN CONFIGURATION	
Lights ON	LEDs COLOR
All Chains	White, Red, Blue
Central Chain	White, Red, Blue
Top/Bottom Chain	White, Red, Blue

36 LED ILLUMINATOR MODELS AND LED CHAIN CONFIGURATION	
Lights ON	LEDs COLOR
All Chains	White, Red, Blue
Top Left	White, Red, Blue
Top right	White, Red, Blue
Bottom left	White, Red, Blue
Bottom right	White, Red, Blue
Left	White, Red, Blue
Right	White, Red, Blue
Any combination of the above chain options	White, Red, Blue

ILLUMINATOR LEDS COLOR	
Illuminator Power	LEDs COLOR
14 LED	White, Red, Blue
36 LED	White, Red, Blue

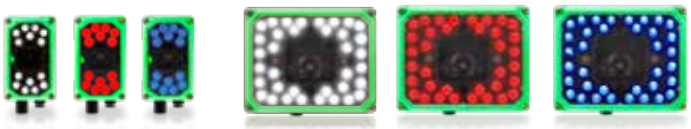

360 DEGREE VISUAL FEEDBACK DEFAULT COLOR	
Default configuration	LEDs COLOR
Good Read	Green
No Read	Red
Configuration	Blue

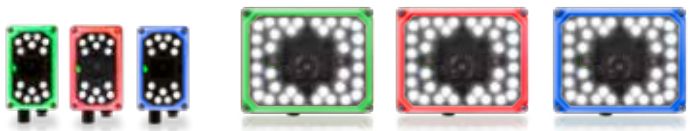

ACCESSORIES

CATEGORY	PART NUMBER	DESCRIPTION
Cable	93A050058	M12-IP67 Cable To CBX or QL (1m)
	93A050059	M12-IP67 Cable To CBX or QL (3m)
	93A050060	M12-IP67 Cable To CBX or QL (5m)
	93A051390	M12-IP67 Cable To CBX or QL (10m)
	93A050116	M12-IP67 17p Flexible Cable To CBX or QL (1m)*
	93A050117	M12-IP67 17p Flexible Cable To CBX or QL (3m)*
	93A050118	M12-IP67 17p Flexible Cable To CBX or QL (5m)*
	93A050122	M12-IP67 GIGA Ethernet Cable X-Coded (1m)
	93A050123	M12-IP67 GIGA Ethernet Cable X-Coded (3m)
	93A050124	M12-IP67 GIGA Ethernet Cable X-Coded (5m)
	93A050140	M12-IP67 GIGA Ethernet Cable X-Coded (10m)
	93A050125	M12-IP67 GIGA Ethernet Flexible Cable X-Coded (1m)*
	93A050126	M12-IP67 GIGA Ethernet Flexible Cable X-Coded (3m)*
	93A050127	M12-IP67 GIGA Ethernet Flexible Cable X-Coded (5m)*
Front cover	93ACC0271	Cover STD LT 14L M320/P2
	93ACC0272	Cover STD LT 36L M320/P2
	93ACC0273	Cover Polarizer LT 14L M320/P2
	93ACC0274	Cover Polarizer LT 36L M320/P2
Filter	95A900018	Filter YAG Cut LT 14L M320/P2
	95A900022	Filter YAG Cut LT 36L M320/P2
Bracket	93ACC0282	BK-32-000 STD FIX BRACKET M320/P2 BODY
	93ACC0283	BK-32-010 PIVOT FIX BRACKET M320/P2 BODY

** Suitable for robotic arms applications*

DATALOGIC PRODUCT OFFERING

Sensors

Hand Held scanners

Mobile Computers

Laser Marking Systems

Safety Laser Scanner

Vision Systems

Stationary Industrial Scanners

Safety Light Curtains

Rev. 00, 10/2020

© 2020 Datalogic S.p.A. and/or its affiliates. • All rights reserved. Without limiting the rights under copyright, no part of this documentation may be reproduced, stored in or introduced into a retrieval system, or transmitted in any form or by any means, or for any purpose, without the express written permission of Datalogic S.p.A. and/or its affiliates. • Datalogic and the Datalogic logo are registered trademarks of Datalogic S.p.A. in many countries, including the U.S. and the E.U. • Matrix 320 is a trademark of Datalogic S.p.A. • All other trademarks and brands are property of their respective owners. • Product specifications are subject to change without notice. •