Matrix 220™

Image Based Reader

Product Reference Guide

Datalogic S.r.l.
Via S. Vitalino, 13
40012 Calderara di Reno (BO)
Italy
Tel. +39 051 3147011
Fax +39 051 3147205

Matrix 220™ Product Reference Guide
Original Instructions
Ed.: 07/2019

This manual refers to software version 1.8.0 and later.

© 2018 - 2019 Datalogic S.p.A. and/or its affiliates

◆ ALL RIGHTS RESERVED. ◆ Without limiting the rights under copyright, no part of this documentation may be reproduced, stored in or introduced into a retrieval system, or transmitted in any form or by any means, or for any purpose, without the express written permission of Datalogic S.p.A. and/or its affiliates.

Datalogic and the Datalogic logo are registered trademarks of Datalogic S.p.A. in many countries, including the U.S.A. and the E.U.

Matrix 220, ID-NET, DL.CODE and X-PRESS are trademarks of Datalogic S.p.A.and/or its affiliates. Digimarc® and DWCODE™ are trademarks of Digimarc Corporation. All other trademarks and brands are property of their respective owners.

This is an OPC UA-based product.

Datalogic shall not be liable for technical or editorial errors or omissions contained herein, nor for incidental or consequential damages resulting from the use of this material.

Table Of Contents

REFERENCES VII
- Reference Documentation vii
- Support Through The Website vii
- Patents vii
- Conventions viii

COMPLIANCE IX
- General ix
- Power Supply ix
- EMC Compliance ix
- CE Compliance ix
- FCC Compliance x
- EAC Compliance x
- LED Safety x

HANDLING XI

GENERAL VIEW XIII

RAPID CONFIGURATION 1
- Step 1 - Connect the System 1
  - CBX100/CBX500 Pinout for Matrix 220 2
- Step 2 - Mount and Position the Reader 3
- Step 3 - Aim and Autofocus the Reader 5
- Step 4 - X-PRESS Configuration 6
  - Aim 6
  - Setup 6
  - Learn 6
  - Reset Reader to Factory Default Environment (Optional) 7
- Step 5 - Installing DL.CODE Configuration Program 8
  - Device Discovery 8
- Step 6 - Device Configuration 11
  - Automatic or Advanced Setup 11
  - Automatic Setup 12
  - Advanced Setup 15
  - Reading Phase 23
  - Good Read Setup 24
  - Data Formatting 25
  - Output Setup 26
- Step 7 - Test Mode 27
- Advanced Reader Configuration 28
  - Host Mode Programming 28

INTRODUCTION 29
- Product Description 29
  - Standard Application Program 30
  - Programmability 30
  - Excellent Performance 31
  - Ease of Setup 31
  - Ease of Use 31
  - Flexible Solution 31
  - Versatility 31
  - Industrial Strength 32

Indicator and Keypad Button **32**
Aiming System **34**
LED Spots **34**
ID-NET **35**
X-PRESS Human Machine Interface **36**
X-PRESS Functions 37
Test Mode 37
Focus/Aim 38
Setup 38
Learn 38
Diagnostic Indication 39
Model Description **39**
Internal Lighting Systems 40
Accessories **42**
Application Examples **44**
Document Handling 44
Deformed or Overprinted Code Reading 44
Direct Part Marking 45
Ink-Jet Printing Technology 45
Color Code/Background 46
Laser Marking/Etching Technology 46
Digimarc Barcode 47
High Dynamic Range (HDR) feature 49
INSTALLATION **52**
Package Contents **52**
Mechanical Dimensions **53**
Mounting And Positioning Matrix 220 ..... **58**
Mounting Accessory Covers **61**
Mounting Flexible Cables **62**
Flexible Cables Technical Data 65
ELECTRICAL CONNECTIONS **67**
CBX Connection Box Pinout **67**
Power Supply **68**
Standard Models 69
Power Over Ethernet (PoE) Models 69
Main Serial Interface **70**
RS232 Interface 70
RS422 Full Duplex Interface 71
ID-NET Interface **72**
ID-NET Cables 72
ID-NET Response Time 73
ID-NET Network Termination 74
ID-NET Connection Diagrams 74
Auxiliary RS232 Interface **77**
Inputs **78**
External Trigger Input Connections Using Matrix 220 Power 79
External Trigger Input Connections Using External Power 81
Input 2 Connections Using Matrix 220 Power 81
Input 2 Connections Using External Power 82
Input 3 Connections (CBX500 Only) 83
Outputs **83**
Output 1 and 2 Connections Using Matrix 220 Power 84
Output 3 Connections Using Matrix 220 Power (CBX500 Only) 86
On-Board Ethernet Interface **87**
User Interface - Serial Host **87**
OPC UA protocol **88**
OPC UA Companion Specifications 88
Available commands (methods) 88
Compatible OPC UA Clients 88
OPC UA on DL.CODE 89

TYPICAL LAYOUTS 90
Ethernet Connection 91
Serial Connection 93
Fieldbus Connection 94
Pass-Through 95
ID-NET Multidata Network (Pass-Through) 96
ID-NET Synchronized Network 97
READING FEATURES 100
FOV Calculation 100
Global FOV Diagrams 101
7 mm Models (38° Horizontal View Angle) 102
12 mm Models (24° Horizontal View Angle) 103
Reading Diagrams 105
Matrix 220 (7 mm models) 1D Codes 106
Matrix 220 (7 mm models) 2D Codes 108
Matrix 220 (12 mm models) 1D Codes 109
Matrix 220 (12 mm models) 2D Codes 111
Maximum Line Speed and Exposure Time Calculations 112
SOFTWARE CONFIGURATION 114
DL.CODE System Requirements 114
Reader Configuration 115
Auto-Calibration 115
Manual Calibration 117
Under-exposure 117
Over-exposure 118
Moving code out of the Field of View 119
Multi Image Acquisition Settings 120
Automatic Image Settings Selection 121
External Image Settings Selection 122
Image Cropping 124
Direct Part Marking Applications 127
Matrix 220 Recommended Illumination for DPM Applications 128
Color Contrast Considerations for DPM Applications 129
Illumination Examples for DPM Applications 131
Code Positioning with Respect to Illumination 131
Code Contrast 132
Image Filter 133
Pass-Through Configurations 137
Internal Network Configurations 139
Master Configuration 139
Multidata ID-NET Network Configurations 142
Synchronized ID-NET Network Configurations 147
Verify Master/Slave Synchronized Configuration 151
Backup and Restore Through DL.CODE 154
Backup 155
Restore 156
Replacement 157
Restore Defaults 157
Restore Default Startup Configuration 158
Restore Default Environment 159
Restore Factory Defaults 159
Diagnostic Alarms 160
Statistics 161
BM150 Display Module Configuration and Messages 162
Configuration Through DL.CODE 162
Accessing the HMI Interface Through Keypad and Display Menu 162
Display Messages 164
BM150 Backup and Restore Procedure 167
MAINTENANCE 169
Cleaning 169

TROUBLESHOOTING 170
General Guidelines 170
TECHNICAL FEATURES 173
Electrical Features 173
Optical Features 174
Environmental Features 174
Physical Features 175
Software Features 175
ALTERNATIVE CONNECTIONS 176
Power, Com and I/O Connector for Standard Models 176
Com and Trigger Connector for PoE Models 177
On-Board Ethernet Connector 178
Standard Models 178
Power over Ethernet (PoE) Models 179
ID-NET Network Termination 179
Inputs 180
Outputs 180
User Interface - Serial Host 183
GLOSSARY 184

References

Reference Documentation

The documentation related to the Matrix 220 is listed below:

- This Product Reference Guide
- DL.CODE User's Manual
- DL.CODE Help Online

Support Through The Website

Datalogic provides several services as well as technical support through its website. Log on to www.datalogic.com.

For quick access, from the home page click on the search icon , and type in the name of the product you are looking for. This allows you access to download Data Sheets, Manuals, Software & Utilities, and Drawings.

Hover over the Support & Service menu for access to Services and Technical Support.

Patents

See www.patents.datalogic.com for patent list.

This product is covered by one or more of the following patents:

Design patents: EP004735694

Utility patents: EP0996284B1, EP0999514B1, EP1014292B1, EP1128315B1, EP1396811B1, EP1413971B1, EP2517148B1, EP2649555B1, JP4435343B2, JP4571258B2, US6512218, US6616039, US6808114, US6997385, US7053954, US7387246, US7433590, US8058600, US8368000, US8888003, US8915443, US9268982, US9430689, US9798948, ZL200980163411.X

Conventions

WARNING

This symbol alerts the user they are about to perform a dangerous action that could result in personal injury as well as damage to the device if not performed correctly. Examples involve exposure to dangerous levels of voltage or electrical shock hazards.

CAUTION

This symbol identifies a hazard or procedure that, if incorrectly performed, could cause equipment damage. It is also used to bring the user's attention to details that are considered IMPORTANT.

NOTE

This symbol draws attention to details or procedures that may be useful in improving, maintaining, or enhancing the performance of the hardware or software being discussed.

Compliance

General

For installation, use and maintenance it is not necessary to open the reader.

Only connect Ethernet and dataport connections to a network which has routing only within the plant or building and no routing outside the plant or building

Power Supply

ATTENTION: READ THIS INFORMATION BEFORE INSTALLING THE PRODUCT

This product is intended to be installed by **Qualified Personnel** only.

This product is intended to be connected to a UL Listed Computer (LPS or “Class 2”) which supplies power directly to the reader, or a UL Listed Direct Plug-in Power Unit (rated 10 to 30 V, minimum 1 A) marked LPS or “Class 2”, or Power over Ethernet source Device supplied by UL Listed Direct Plug-in Power Unit marked LPS or “Class 2”.

EMC Compliance

In order to meet the EMC requirements:

- connect reader chassis to the plant earth ground by means of a flat copper braid shorter than 100 mm;
- connect pin "Earth" of the CBX connection box to a good Earth Ground;
- for direct connections, connect your cable shield to the locking ring nut of the connector.

CE Compliance

CE marking states the compliance of the product with essential requirements listed in the applicable European directive. Since the directives and applicable standards are subject to continuous updates, and since Datalogic promptly adopts these updates, therefore the EU declaration of conformity is a living document. The EU declaration of conformity is available for competent authorities and customers through Datalogic commercial reference contacts. Since April 20th, 2016 the main European directives applicable to Datalogic products require inclusion of an adequate analysis and assessment of the risk(s). This evaluation was carried out in relation to the applicable points of the standards listed in the Declaration of Conformity. Datalogic products are mainly designed for integration purposes into more complex systems. For this reason it is under

the responsibility of the system integrator to do a new risk assessment regarding the final installation.

Warning

This is a Class A product. In a domestic environment this product may cause radio interference in which case the user may be required to take adequate measures.

FCC Compliance

Modifications or changes to this equipment without the expressed written approval of Datalogic could void the authority to use the equipment.

This device complies with PART 15 of the FCC Rules. Operation is subject to the following two conditions: (1) This device may not cause harmful interference, and (2) this device must accept any interference received, including interference which may cause undesired operation.

This equipment has been tested and found to comply with the limits for a Class A digital device, pursuant to part 15 of the FCC Rules. These limits are designed to provide reasonable protection against harmful interference when the equipment is operated in a commercial environment. This equipment generates, uses, and can radiate radio frequency energy and, if not installed and used in accordance with the instruction manual, may cause harmful interference to radio communications. Operation of this equipment in a residential area is likely to cause harmful interference in which case the user will be required to correct the interference at his/her own expense.

EAC Compliance

Customs Union:

The CU Conformity certification has been achieved; this allows the Product to bear the Eurasian Mark of conformity.

LED Safety

LED emission according to EN 62471.

Handling

The Matrix 220 is designed to be used in an industrial environment and is built to withstand vibration and shock when correctly installed, however it is also a precision product and therefore before and during installation it must be handled correctly to avoid damage.

- avoid that the readers are dropped (exceeding shock limits)

- do not fine tune the positioning by striking the reader or bracket.

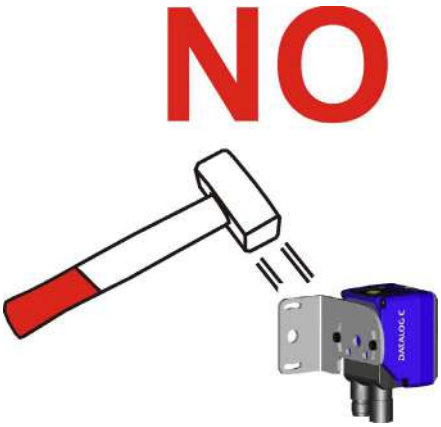

- do not weld the reader into position which can cause electrostatic, heat or reading window damage.

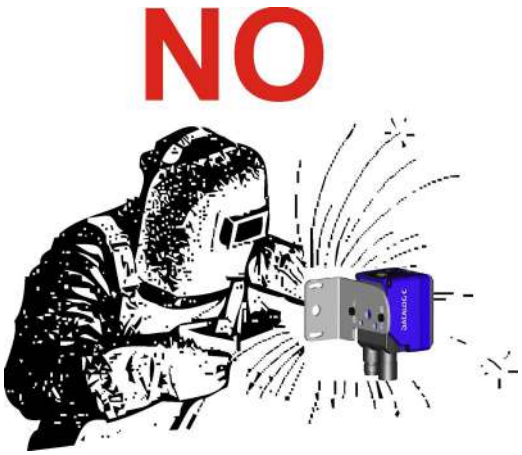

- do not spray paint near the reader which can cause reading window damage.

General View

General View of DPM Models

①	Reading Window	⑥	Accessory Window Cover
②	Mounting Holes (2)	⑦	X-PRESS Interface
③	Power On LED	⑧	Ethernet Connector
④	Ethernet Connection LED	⑨	Power, COM, I/O Connector
⑤	90° Rotating Connector Block	⑩	Power Over Ethernet Connector
		⑪	COM, Trigger Connector

General View of Standard Models

1	Reading Window	6	Accessory Window Cover
2	Mounting Holes (2)	7	X-PRESS Interface
3	Power On LED	8	Ethernet Connector
4	Ethernet Connection LED	9	Power, COM, I/O Connector
5	90° Rotating Connector Block	10	Power Over Ethernet Connector
		11	COM, Trigger Connector

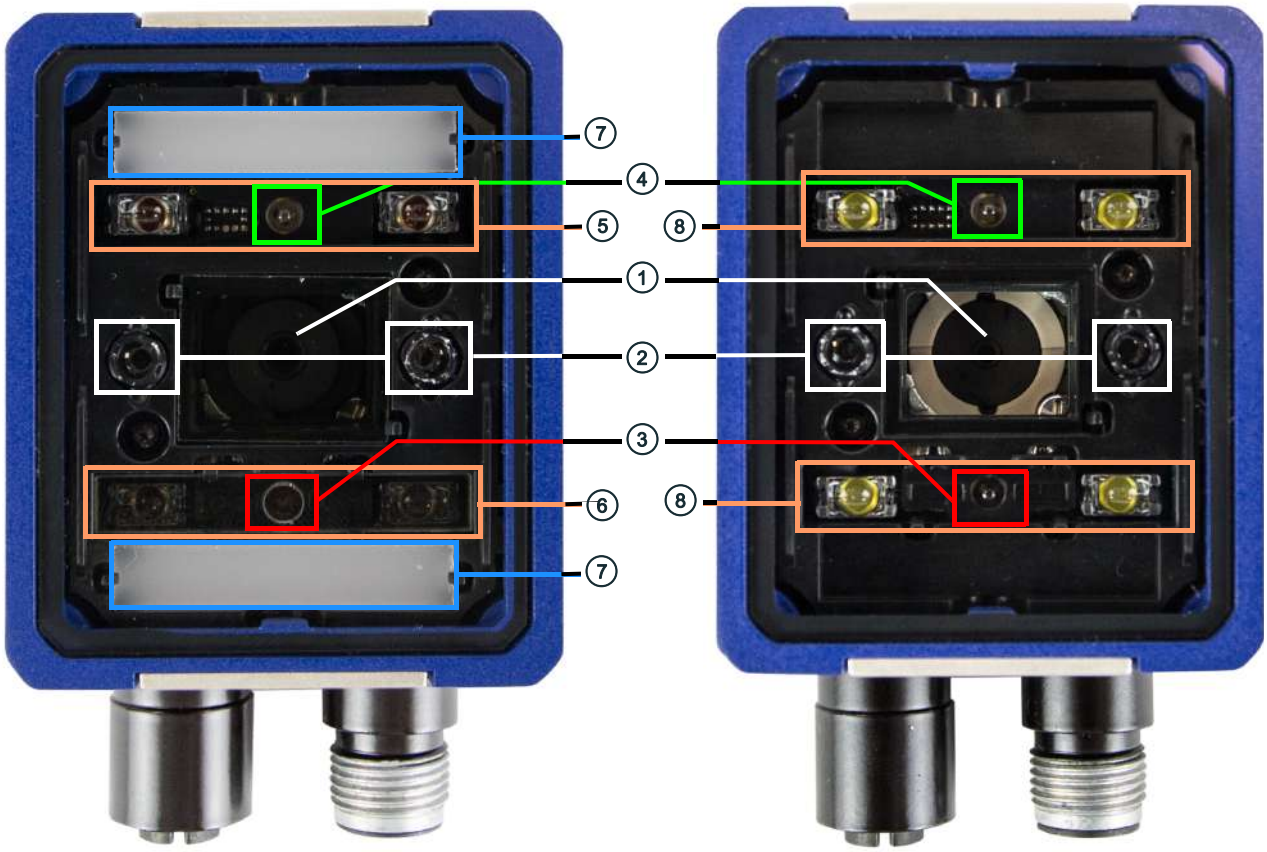

DPM Models

Standard Models

Reading Window Details

①	Lens	⑤	Non Polarized Illuminator
②	LED Aiming System	⑥	Polarized Illuminator
③	Red Spot (No Read)	⑦	Diffused Illuminators
④	Green Spot (Good Read)	⑧	Standard Illuminators (Top/Bottom)

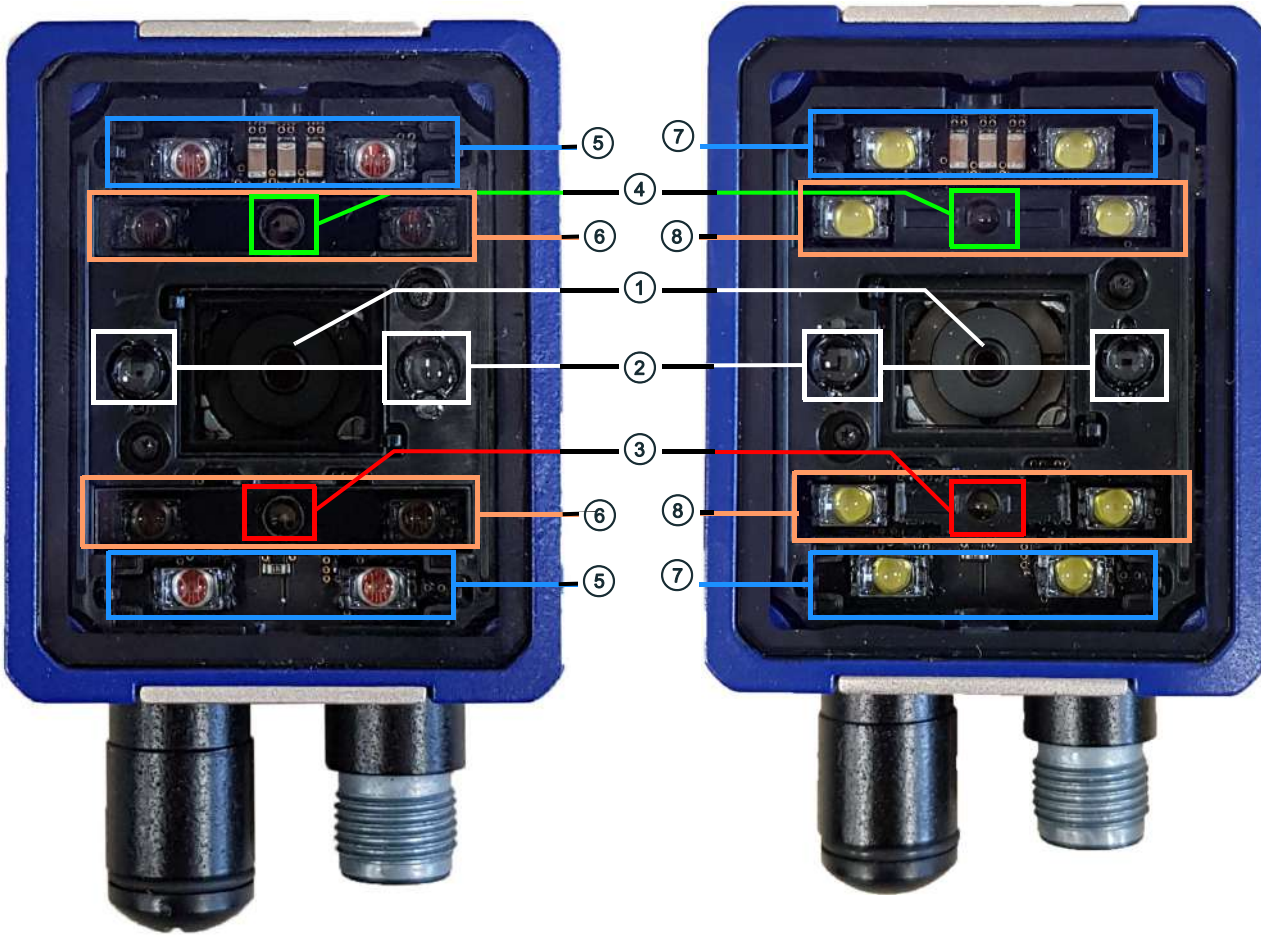

DPM High Power Illuminator Models

Standard High Power Illuminator Models

Reading Window Details for High Power Illuminator Models

1	Lens	5	Non Polarized Illuminator
2	LED Aiming System	6	Polarized Illuminator
3	Red Spot (No Read)	7	Standard HP Illuminators (Top/Bottom)
4	Green Spot (Good Read)	8	Central HP Illuminators

X-PRESS Interface Details

	Normal Operation	X-PRESS Configuration
1	Ready	Learn
2	Good	Setup
3	Trigger	Aim
4	COM	Test
5	Status	
6	Push-button	

Chapter 1
Rapid Configuration

Step 1 - Connect the System

To connect the system in a Stand Alone configuration, you need the hardware indicated in Figure 1. In this layout the data is transmitted to the Host on the Ethernet interface. Data can also be transmitted on the RS232 main and/or auxiliary interface independently from the Ethernet interface selection.

When One Shot or Phase Mode Operating mode is used, the reader is activated by an External Trigger (photoelectric sensor) when the object enters its reading zone.

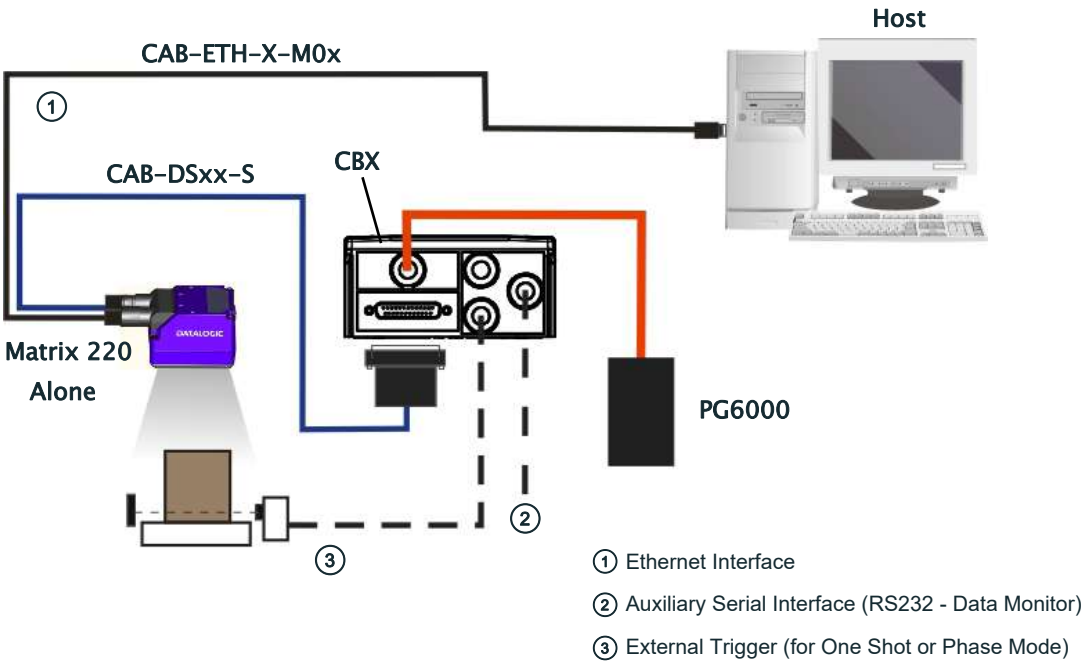

Figure 1 – Matrix 220 in Stand Alone Layout

CBX100/CBX500 Pinout for Matrix 220

The table below gives the pinout of the CBX100/CBX500 terminal block connectors. Use this pinout when the Matrix 220 reader is connected by means of the CBX100/CBX500:

Group	Label	Description
Input Power	Vdc	Power Supply Input Voltage +
	GND	Power Supply Input Voltage -
	Earth	Protection Earth Ground
Inputs	+V	Power Source - External Trigger
	I1A	External Trigger A (polarity insensitive)
	I1B	External Trigger B (polarity insensitive)
	-V	Power Reference - External Trigger
	+V	Power Source - Inputs
	I2A	Input 2 A (polarity insensitive)
	I2B	Input 2 B (polarity insensitive)
	-V	Power Reference - Inputs
Outputs	+V	Power Source - Outputs
	-V	Power Reference - Outputs
	O1+	Output 1 + opto-isolated and polarity sensitive
	O1-	Output 1 - opto-isolated and polarity sensitive
	O2+	Output 2 + opto-isolated and polarity sensitive
	O2-	Output 2 - opto-isolated and polarity sensitive
	O3A	Output 3 - opto-isolated (only available through CBX500)
Auxiliary Interface	TX	Transmit Data
	RX	Receive Data
	SGND	Auxiliary Interface Signal Ground
ID-NET	REF	Network Reference
	ID+	ID-NET network data +
	ID-	ID-NET network data -
	Shield	Network Cable Shield
Main Interface	**RS232**	**RS422 Full Duplex**
	TX	TX+
	RX	*RX+
	-	TX-
	-	*RX-
	SGND	SGND

* Do not leave floating, see "RS422 Full Duplex Interface" on page 71 for connection details.

CAUTION

Do not connect GND, SGND and REF to different (external) ground references. GND, SGND and REF are internally connected through filtering circuitry which can be permanently damaged if subjected to voltage drops over 0.8 Vdc.

Step 2 - Mount and Position the Reader

1. To mount the Matrix 220, use the mounting brackets to obtain the most suitable position for the reader. The most common mounting configuration is shown in the figure below.

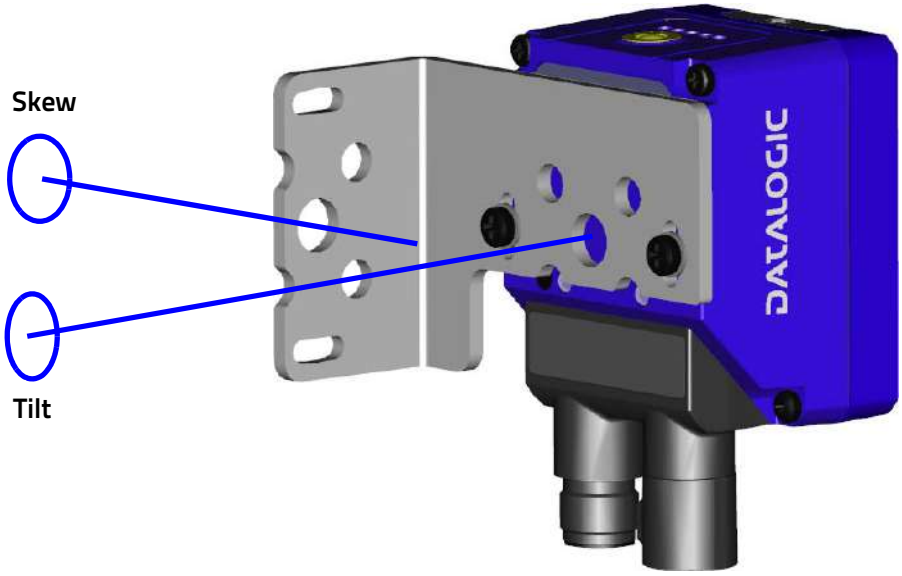

Figure 2 – Positioning with Mounting Bracket

2. When mounting the Matrix 220 take into consideration these three ideal label position angles: **Pitch or Skew 10° to 20° and Tilt 0°**, although the reader can read a code at any tilt angle provided the code fits into the Field Of View (FOV).

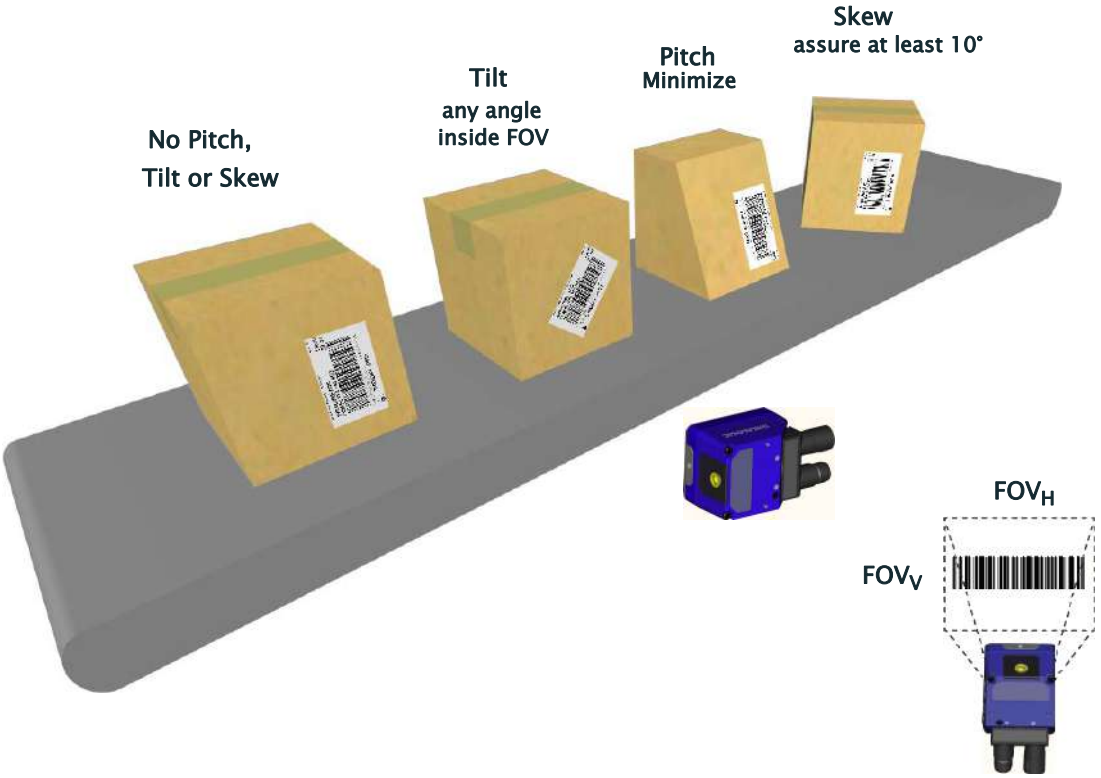

Figure 3 – Pitch, Skew and Tilt References

3. Refer to the reading diagrams in Chapter 6, to determine the distance your reader should be positioned at.

NOTE

Rapid Configuration of the Matrix 220 reader can be made either through the X-PRESS interface (steps 3-4) which requires no PC connection, or by using the DL.CODE Configuration Program (steps 5-6). Select the procedure according to your needs.

Step 3 - Aim and Autofocus the Reader

Matrix 220 provides a built-in LED aiming system to aid reader positioning. The autofocus feature is also incorporated into this function. The aiming system is accessed through the X-PRESS Interface.

1. Power the reader on. During the reader startup (reset or restart phase), all the LEDs blink for one second. On the reverse side of the reader near the bracket, the “POWER ON” LED (blue) indicates the reader is correctly powered.

2. Place the **Grade A Barcode Test Chart** in front of the reader at the correct reading distance for your application. See "Global FOV Diagrams" on page 101 for reference.

3. Enter the Aim/Autofocus function by pressing and holding the X-PRESS push button until the Aim LED is on.

4. Release the button to enter the Aim function. The aiming system turns on, and the Autofocus procedure begins, see Figure 4. The Aim LED will blink until the procedure is completed.

   Within 3 seconds (before the reader flashes), center one of the larger codes between the aiming system indicators (the code must not move during this procedure).

   The Autofocus procedure ends when the Reading Distance and PPI values are successfully saved in the reader memory, the Aim LED will stop blinking and Matrix 220 emits 3 high pitched beeps.

   If the Autofocus cannot be reached after a timeout of about 3 (three) minutes Matrix 220 will exit without saving the parameters to memory, the Aim LED will stop blinking and in this case Matrix 220 emits a long low pitched beep.

Figure 4 - X-PRESS Interface; Aim/Autofocus Function

NOTE

You can exit the Aim/Autofocus function at any time by pressing the X-PRESS push button once. After a short delay the autofocus procedure is cancelled and the aiming indicators turn off.

Step 4 - X-PRESS Configuration

Once Matrix 220 is focused at the correct reading distance, you must configure it for optimal code reading relative to your application.

Aim

1. Enter the Aim function by pressing and holding the X-PRESS push button until the Aim LED is on.
2. Release the button to enter the Aim function. The aiming system turns on.
3. **Select a single code from your application**. Position the code at the center of the FOV (equidistant from the aiming indicators.

   The reader may start flashing and try to perform autofocus however this will have no effect on the application specific code; it can be ignored.

   Exit the Aim function by pressing the X-PRESS push button once. After a short delay the Aim function is cancelled and the aiming indicators turn off.

Setup

4. Enter the Setup function by pressing and holding the X-PRESS push button until the Setup LED is on.
5. Release the button to enter the Setup function. The Setup LED will blink until the procedure is completed.

   The Setup procedure ends when the Image Acquisition parameters are successfully saved in the reader memory, the Setup LED will stop blinking and Matrix 220 emits 3 high pitched beeps.

   If the calibration cannot be reached after a timeout of about 5 (five) seconds Matrix 220 will exit without saving the parameters to memory, the Setup LED will stop blinking and in this case Matrix 220 emits a long low pitched beep.

Learn

6. Enter the Learn function by pressing and holding the X-PRESS push button until the Learn LED is on.
7. Release the button to enter the Learn function. The Learn LED will blink until the procedure is completed.

   The Learn procedure ends when the Image Processing and Decoding parameters are successfully saved in the reader memory, the Green Spot is activated, the Learn LED will stop blinking and Matrix 220 emits 3 high pitched beeps[1].

1. The Code Autolearn procedure will not recognize the following symbologies: Pharmacode, MSI, Standard 2 of 5, Matrix 2 of 5.

If the autolearning cannot be reached after a timeout of about 3 (three) minutes Matrix 220 will exit without saving the parameters to memory, the Learn LED will stop blinking and in this case Matrix 220 emits a long low pitched beep.

NOTE

The Grade A Barcode Test Chart cannot be used to set the Code 128 symbology (even though the reader successfully reads the code). Use the application specific code if you need to set this symbology.

NOTE

When using X-PRESS or the BM150 menu to perform Auto-Learn, only a single code can be configured (successive Learns will substitute the current code). To configure multiple codes, use the DL.CODE Auto-Learn procedure.

NOTE

You can always exit from any X-PRESS function at any time by pressing the X-PRESS push button once. After a short delay the procedure is cancelled.

NOTE

If you have used this procedure to configure Matrix 220, go to step 7.

Reset Reader to Factory Default Environment (Optional)

If it ever becomes necessary to reset the reader's Environment parameters to their factory default values, you can perform this procedure by holding the X-PRESS push button pressed while powering up the reader. **You must keep the X-PRESS push button pressed until all LEDs blink simultaneously for about 3 seconds. Release and re-press the button during this LED blinking sequence**.

All the device's Environment parameters are reset including the default IP Address. The Matrix 220 emits 3 high pitched beeps and after a few seconds enters run mode.

Any previously saved configurations on the device will remain in memory, but the Default configuration is set as the startup configuration.

NOTE

If you release the button while the LEDs are all on continuously (after the blinking phase), the reader will enter the Loader program sequence and the LEDs will begin to cycle through various patterns. Just cycle power to return to run mode.

Step 5 - Installing DL.CODE Configuration Program

CAUTION

DL.CODE does not currently support Windows Embedded (often used in industrial PCs and/or PLCs).

DL.CODE is a Datalogic reader configuration tool providing several important advantages:

- Intuitive Graphical User Interface for rapid configuration
- Defined configuration directly stored in the reader
- Discovery and IP address setting features to facilitate remote configuration
- Device Monitoring

To install DL.CODE:

1. On the PC that will be used for configuration, (running Windows 7, 8.1, or 10), download the DL.CODE mini-DVD.zip file. Extract the files maintaining the folder structure and run the **start.hta** file to access the installation pop-up. Click on the **Install DL.CODE** link to run the installation program and follow the installation procedure.

NOTE

To perform a "silent" installation (without user input), see the DL.CODE User's Guide.

2. When the installation is complete the DL.CODE entry is created in the Start>Programs bar under "Datalogic" as well as a desktop icon. Double-click the desktop icon to run it.

This configuration procedure assumes a laptop computer, running DL.CODE, is connected to a factory default reader through the Ethernet port.

Device Discovery

The User Interface opens and displays a list of all the devices belonging to the Local Area Network. DL.CODE has a discovery feature to accomplish this task.

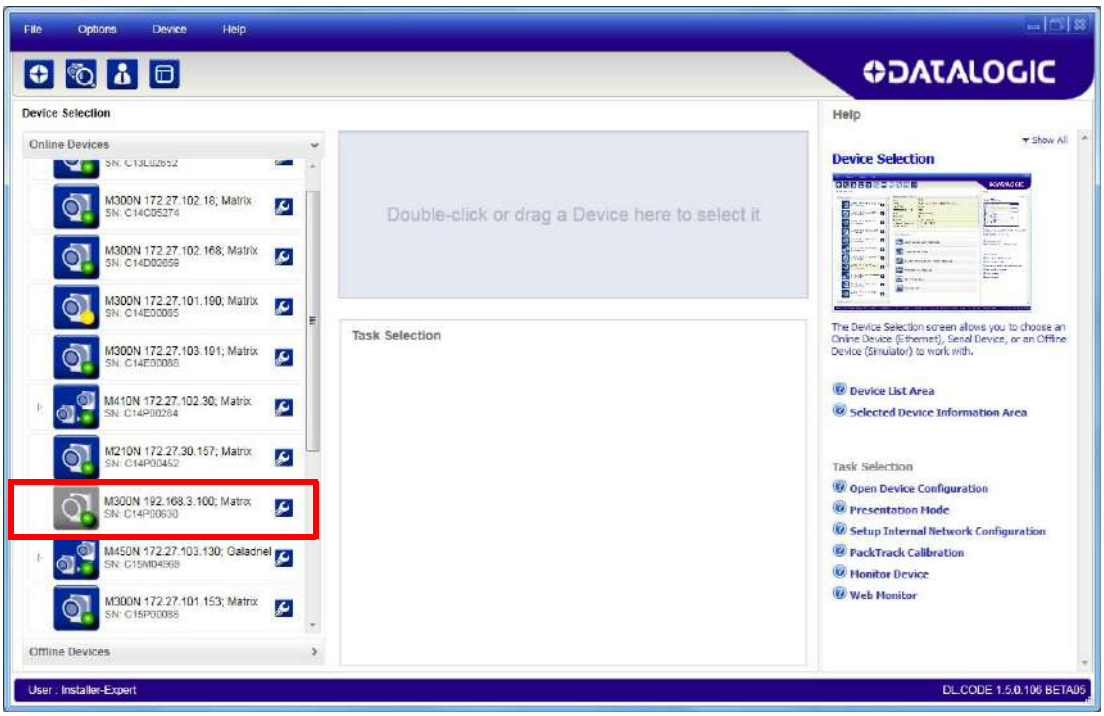

Figure 5 – Device Discovery

The discovery feature will also show devices not belonging to the LAN and display them in grey (see Figure 5).

3. First the device must be added to the LAN by aligning its IP Address to the network. The network administrator should provide valid LAN address(es).

4. Find your device in the list by matching its serial number (SN) then click on the device wrench icon to open the Device Environment Configuration window.

5. Change the Ethernet Settings (IP Address, Subnet Mask, Gateway Address etc.) according to the network requirements.

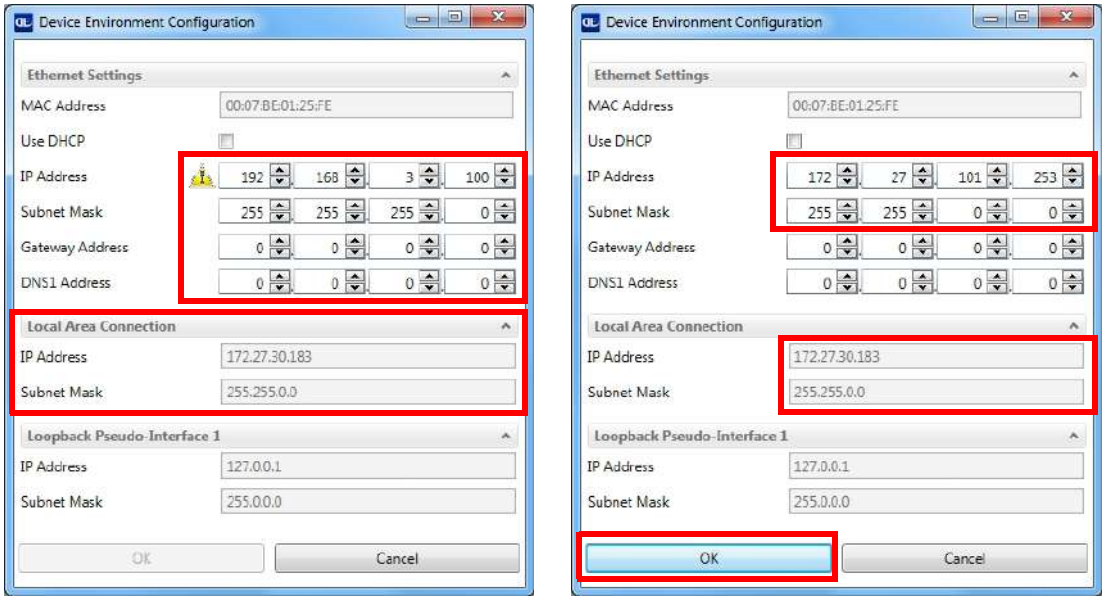

Figure 6 – Device Environment Configuration Window

6. Click OK; the device will reappear in the list of Online Devices (in color) meaning it is now part of the LAN and can be configured. The new IP address will also be displayed.

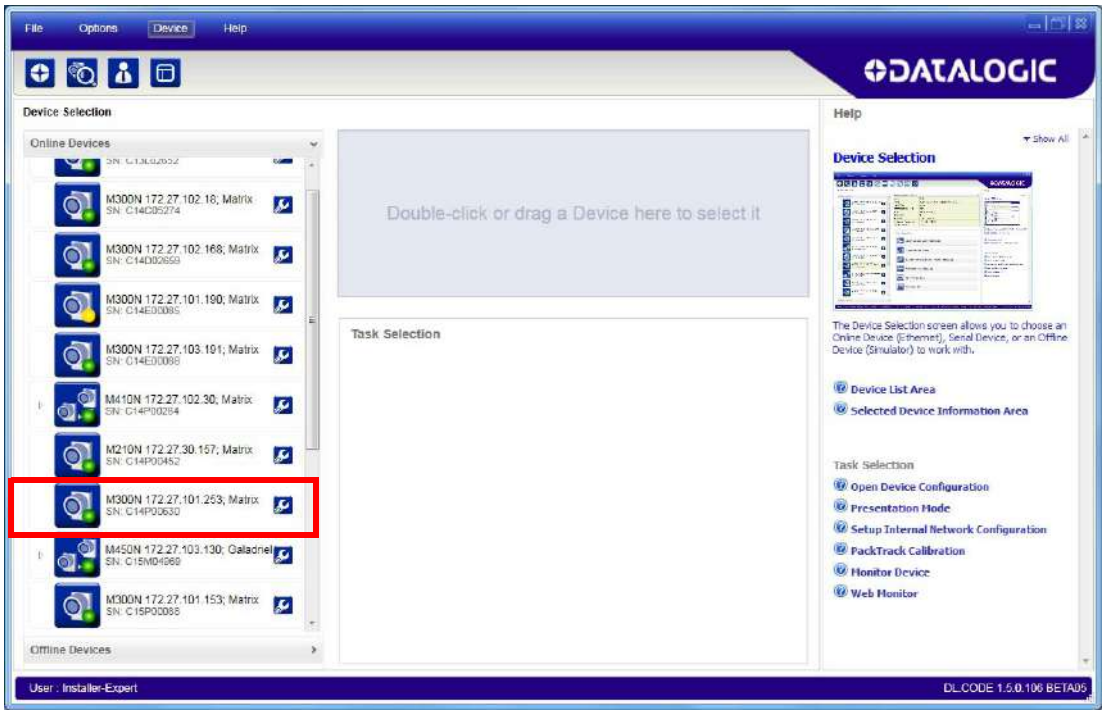

7. Double-click on or drag the device icon into the Selected Device Information Area. Details about the device will be displayed in this area.

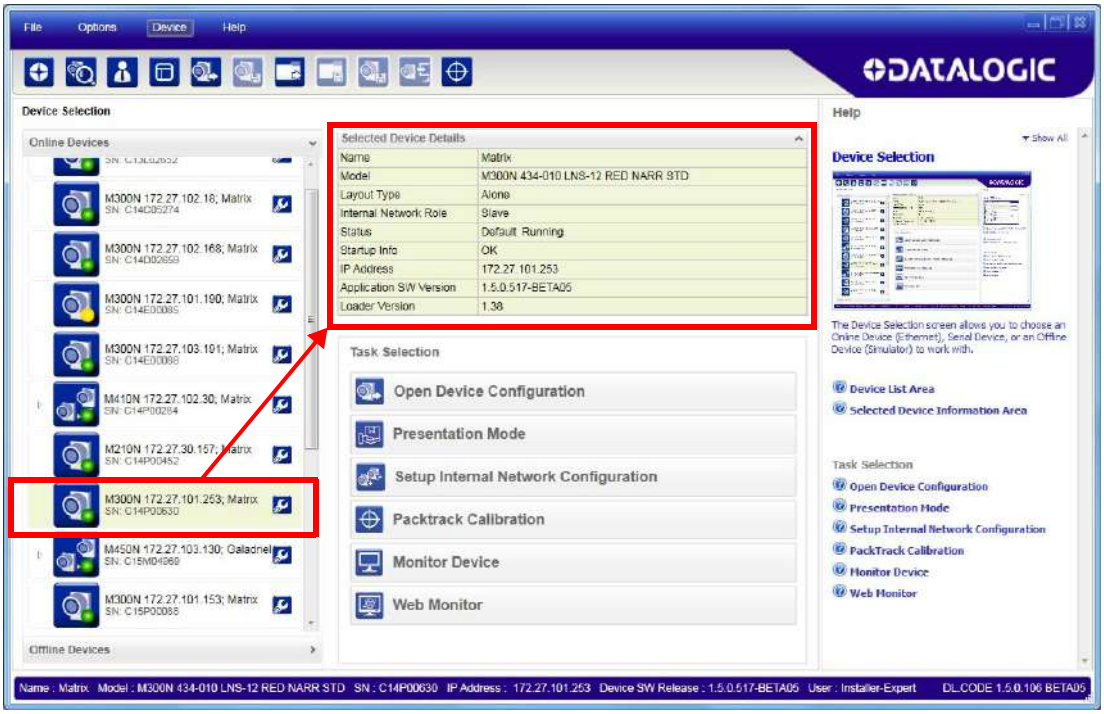

Figure 7 – DL.CODE Opening Window

Step 6 - Device Configuration

Automatic or Advanced Setup

Automatic Setup provides an automatic procedure for setting: optical/ illumination, reading distance, and code definition parameters to obtain the most stable decoding conditions for a single code symbology based on the images presented to the reader. It can be set to include Image Filters if necessary. See the table below for codes and filters managed by Automatic Setup. Automatic Setup is especially useful for DPM applications.

Enabled 1D Codes	Enabled 2D Codes	Enabled Filters
CODE 128	DATAMATRIX ECC 200	ERODE 3x3, 5x5 and 7x7
EAN 128	QR	DILATE 3x3, 5x5 and 7x7
CODE 39	MICRO QR	SMOOTHING
CODE 93	AZTEC	
CODABAR	MAXICODE	
PDF417	DOTCODE	
MICRO PDF417		
GS1 DATABAR		
GS1 DATABAR STACKED		
GS1 DATABAR LIMITED		
GS1 DATABAR EXPANDED		
GS1 DATABAR EXPANDED STACKED		
UPCEAN FAMILY EAN13		
UPCEAN FAMILY EAN8		
UPCEAN FAMILY UPCA		
UPCEAN FAMILY UPCE		

Advanced Setup provides access to the complete array of optical/illumination, focusing adjustment, and code definition parameters that can be fine-tuned semi-automatically and manually to obtain the best results for applications of any complexity.

NOTE

If your application requires multiple code symbologies, multiple image settings, Code Grading or other parameter settings for decoding, then use the Advanced Setup, see page 15.

Automatic Setup

To begin configuration, the reader must be correctly mounted so that its Field of View covers the application reading area.

1. From the Task Area select Open Device Configuration.

2. The Open Device Configuration window opens showing the list of currently saved configurations (jobs) saved on the device. For new devices, the only saved job is the Default configuration. Click OK. The device enters run mode and begins acquiring images.

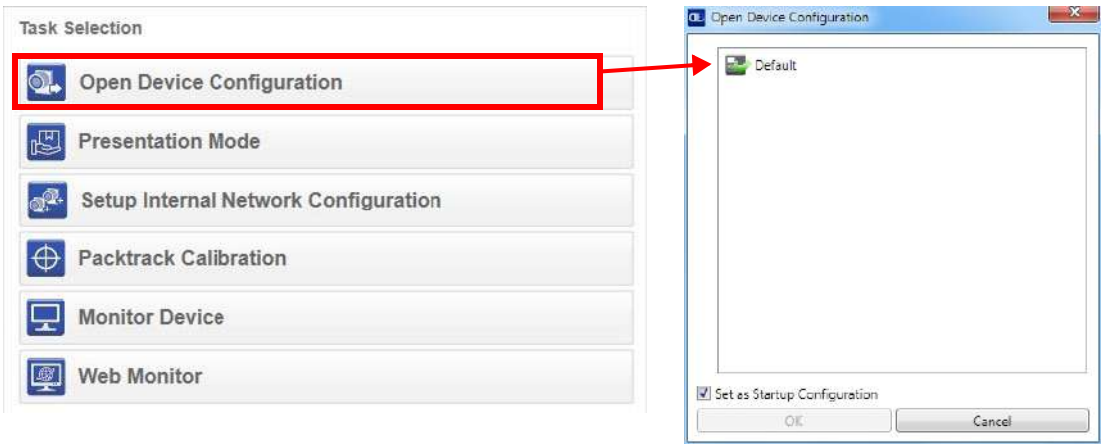

3. Place the application code in front of the reader at the correct application reading distance.

4. Click on the Pause button to stop image acquisition.

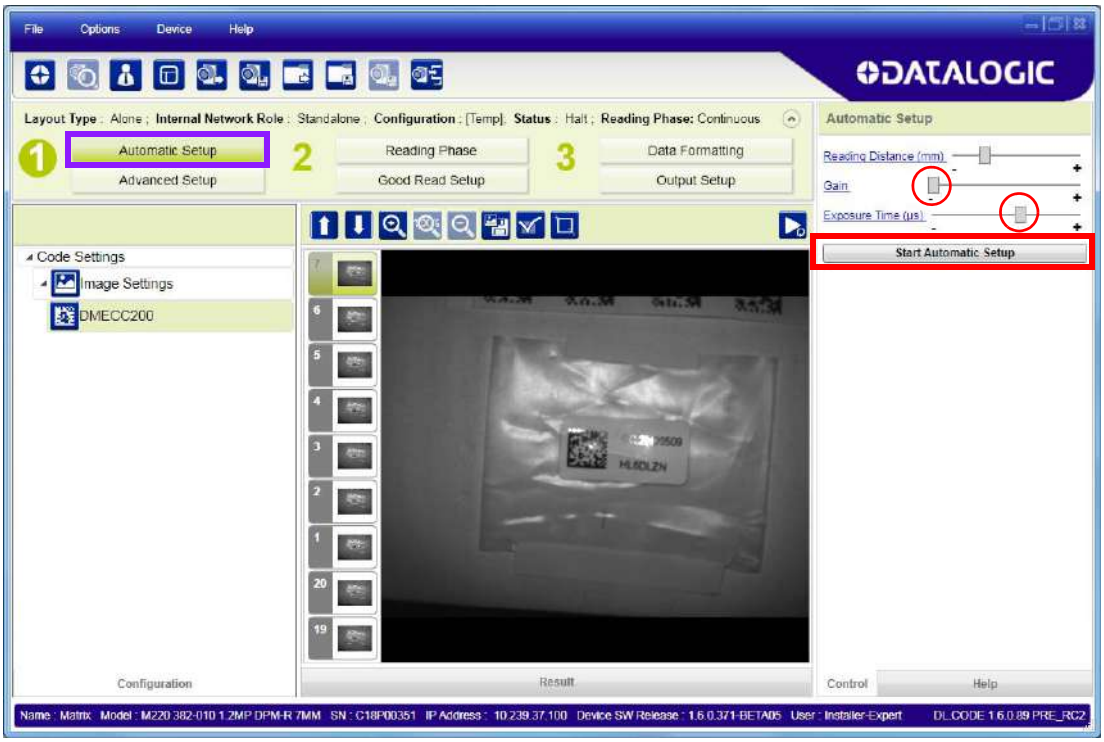

NOTE

If the image display area is too dark to see the images being captured, you can drag the Gain and Exposure Time sliders (circled in red in the figure above) to the right to increase visibility. This will not affect Automatic Setup.

5. Click on the **Start Automatic Setup** button. The following window is displayed:

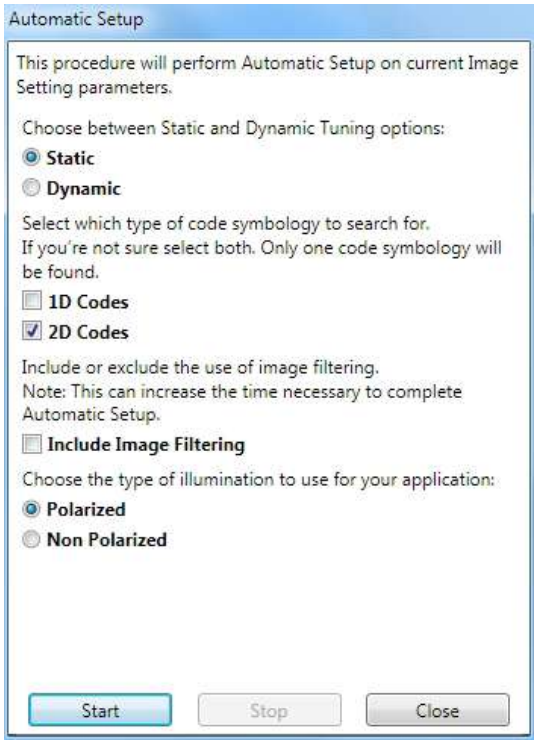

6. Select the correct reading conditions: Static or Dynamic Tuning, 1D or 2D code, Include Image Filtering (to find the best decoding condition). For DPM models you can select to use the Polarized or Non Polarized Illuminators.

7. Click Start to begin the procedure. The reader begins acquiring images. At the end of the procedure the **Status: Completed** message appears. You can Close the Automatic Setup window.

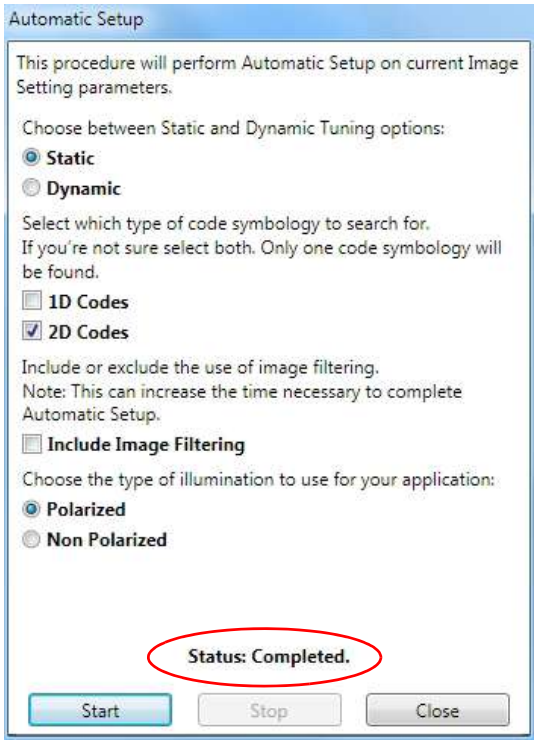

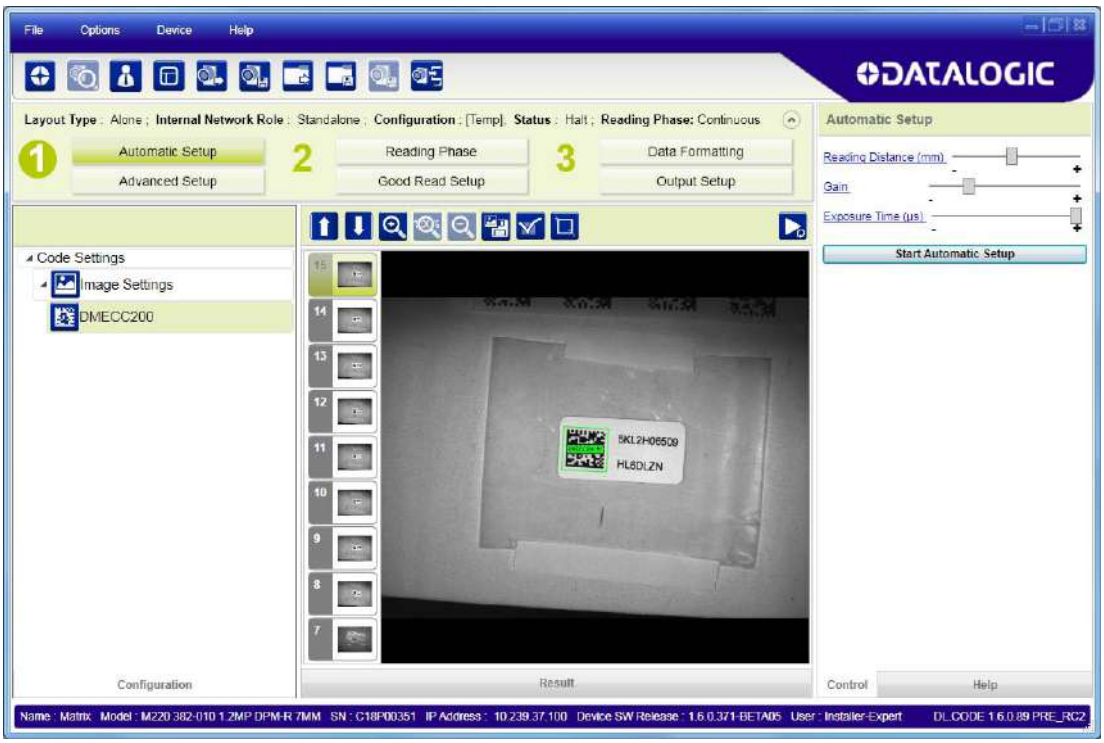

Your reader is now optimized for decoding. Continue with the Reading Phase configuration described on page 23.

Advanced Setup

To begin configuration, the reader must be correctly mounted at the correct reading distance for your application so that its Field of View covers the application reading area.

1. From the Task Area select Open Device Configuration.

2. The Open Device Configuration window opens showing the list of currently saved configurations (jobs) saved on the device. For new devices, the only saved job is the Default configuration. Click OK. The device enters run mode and begins acquiring images.

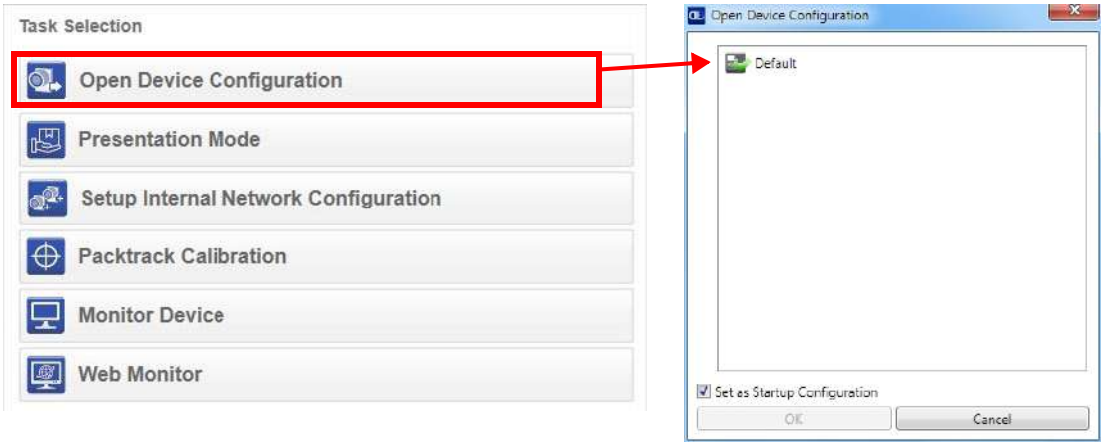

3. Click on the Advanced Setup button and press the Play icon.

4. Place the **Grade A Barcode Test Chart** in the reading area. Once positioned, stop image acquisition by clicking on the Pause button.

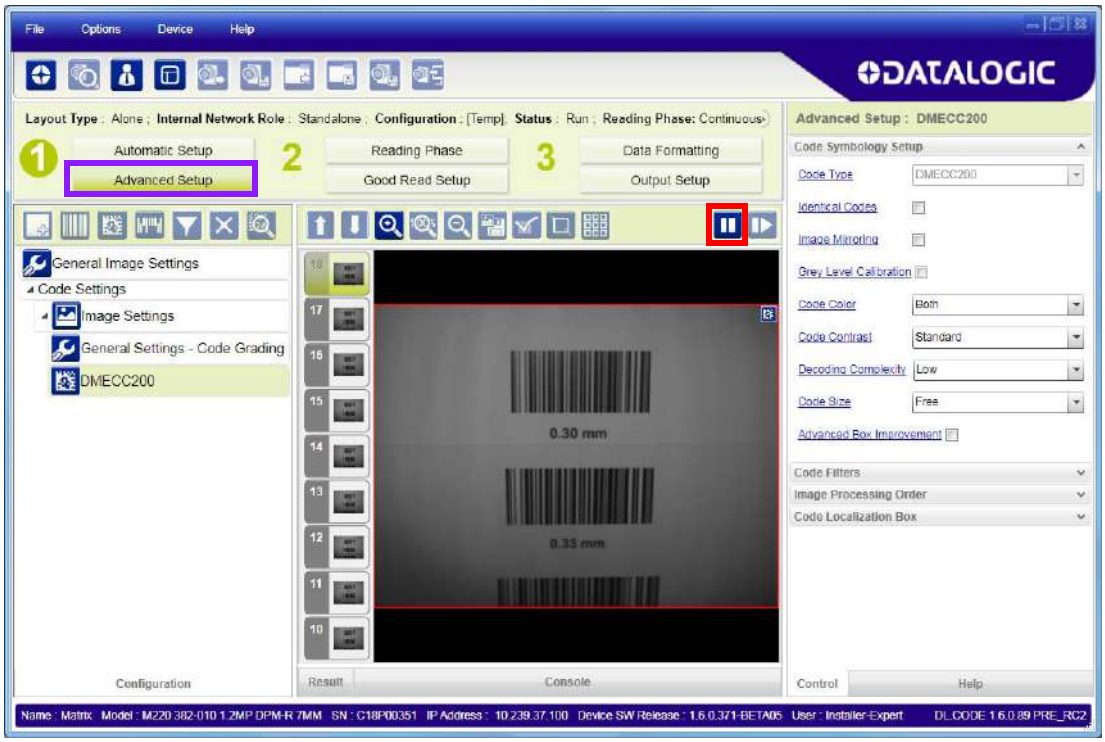

5. Click the Image Settings branch and then click the Image Auto Setup button to automatically acquire the best exposure time and gain values.

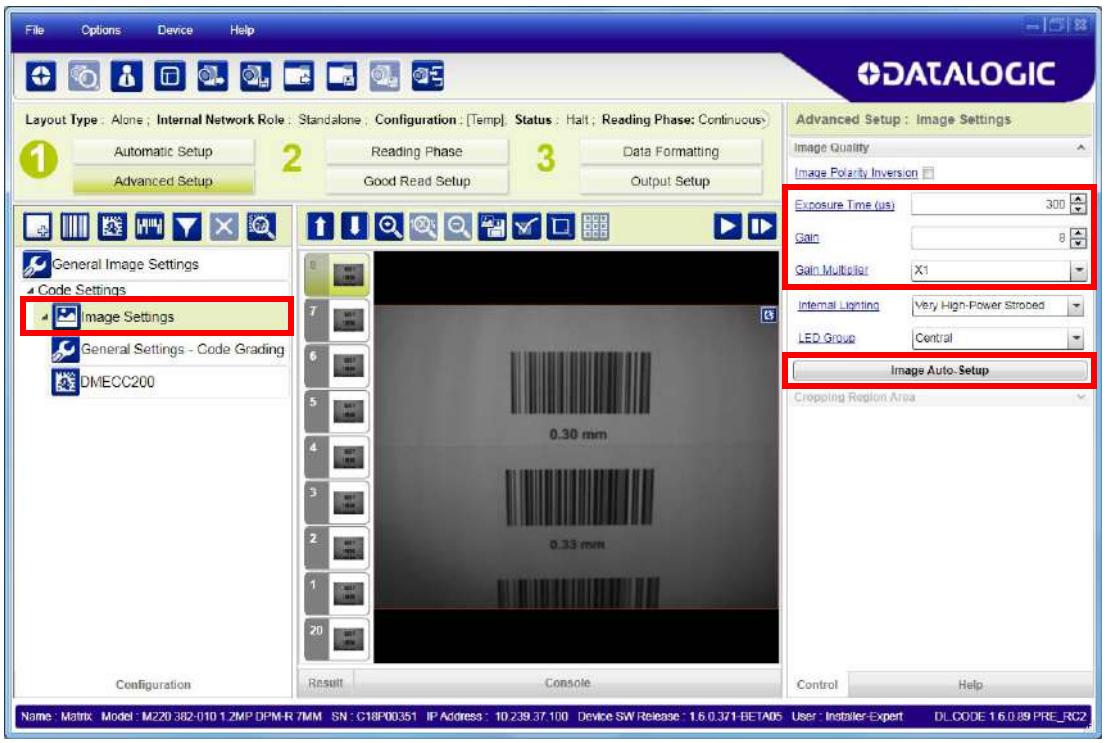

6. Select the Static or Dynamic Self-Tuning option; Start Autolearn and Apply to the Image Settings.

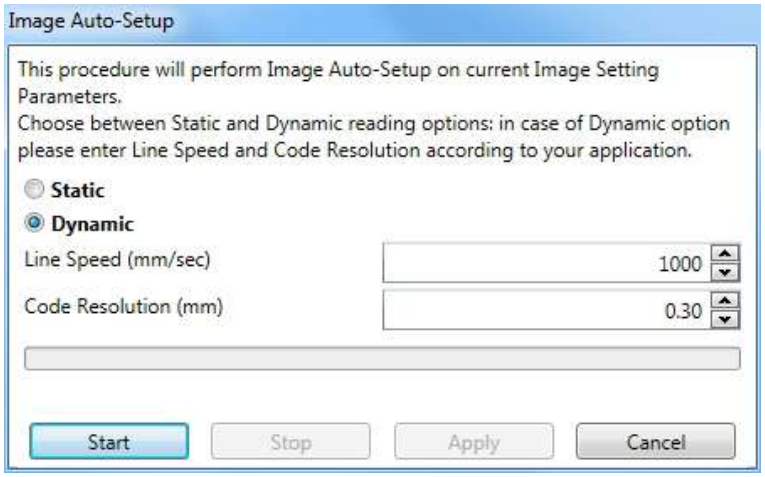

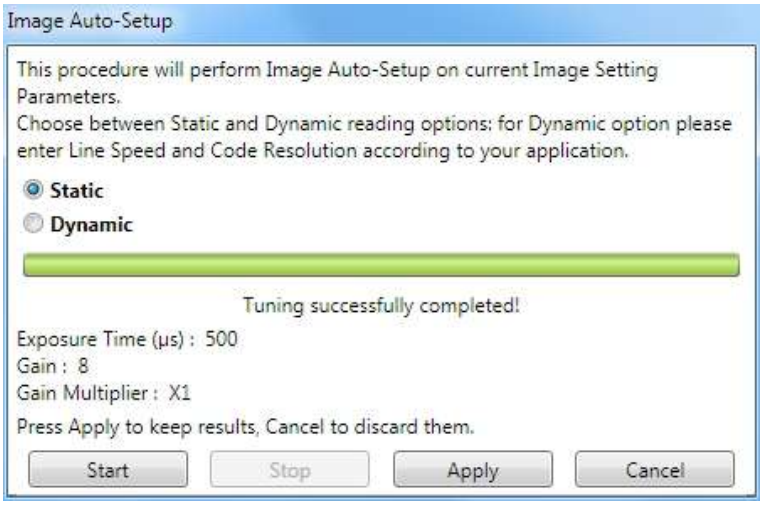

After Applying the Image Auto-Setup you can see from the Image Settings branch that the Exposure time and Gain parameters have been updated.

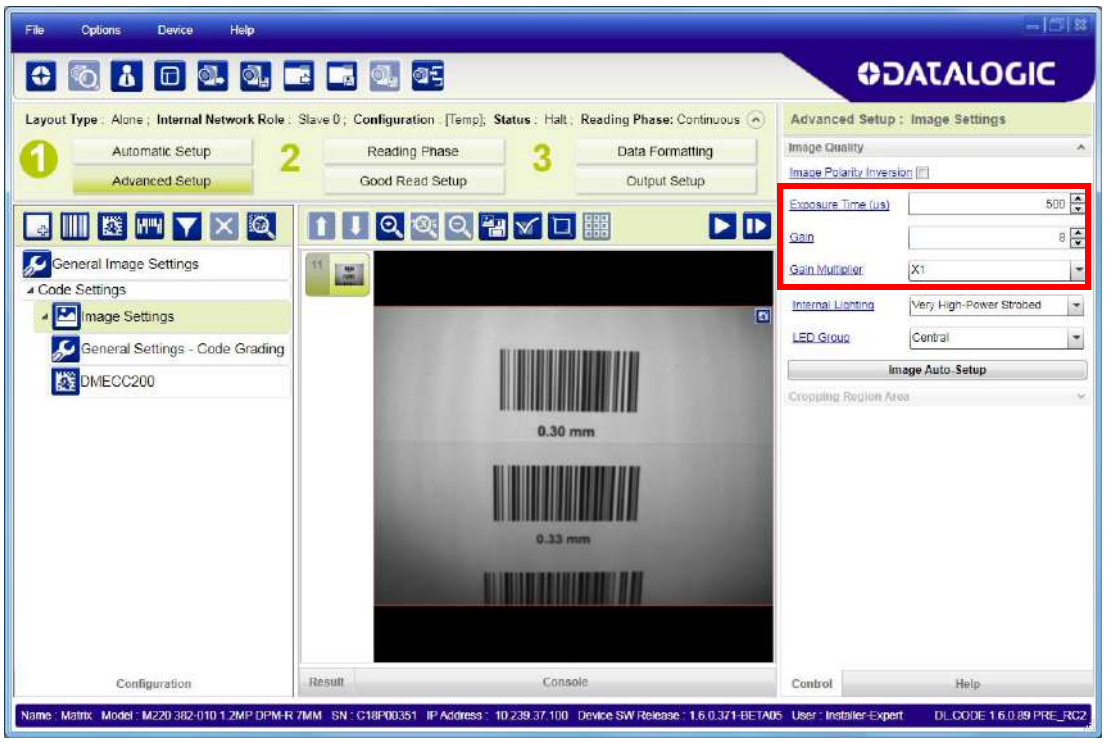

NOTE

For applications having multiple lighting or code reading conditions, up to 10 different Image Settings can be configured by adding them with the icon.

7. Now select the General Image Settings branch and click on the Focus Autolearn button.

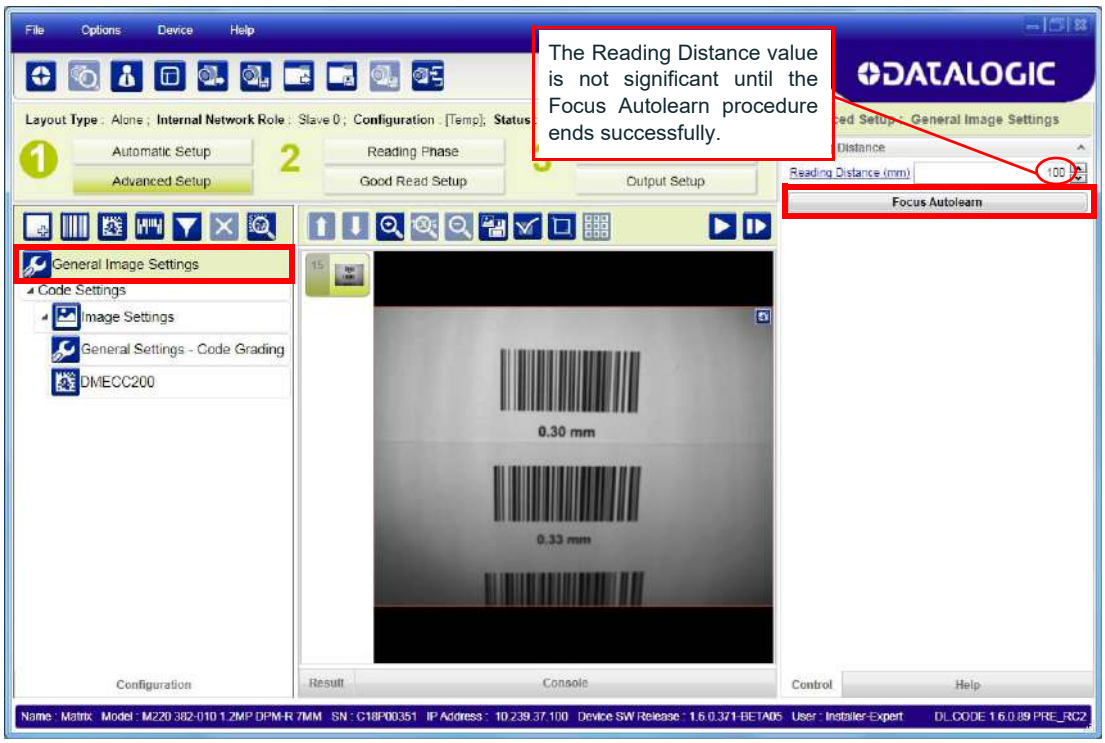

8. The Calibrate dialog box opens allowing you to start the procedure. Click Start.

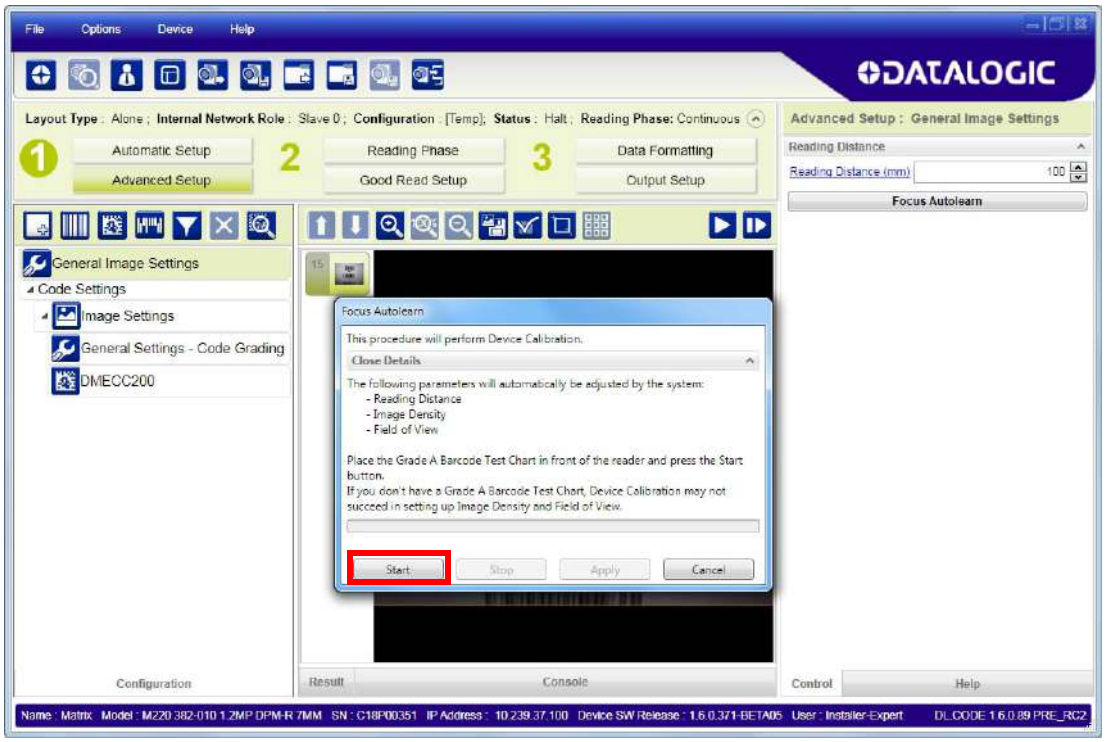

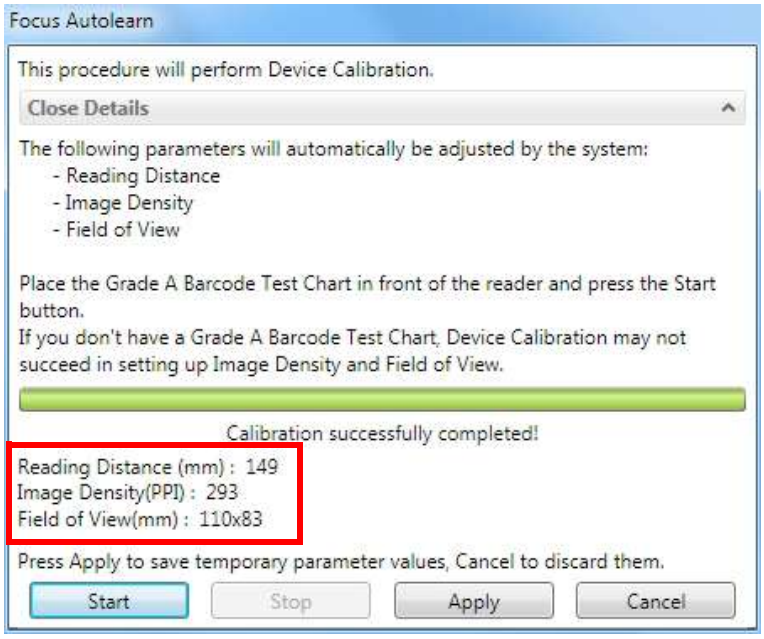

At the end of the calibration you can see the new Reading Distance and Image Density (PPI) values as well as the FOV dimensions. Click Apply.

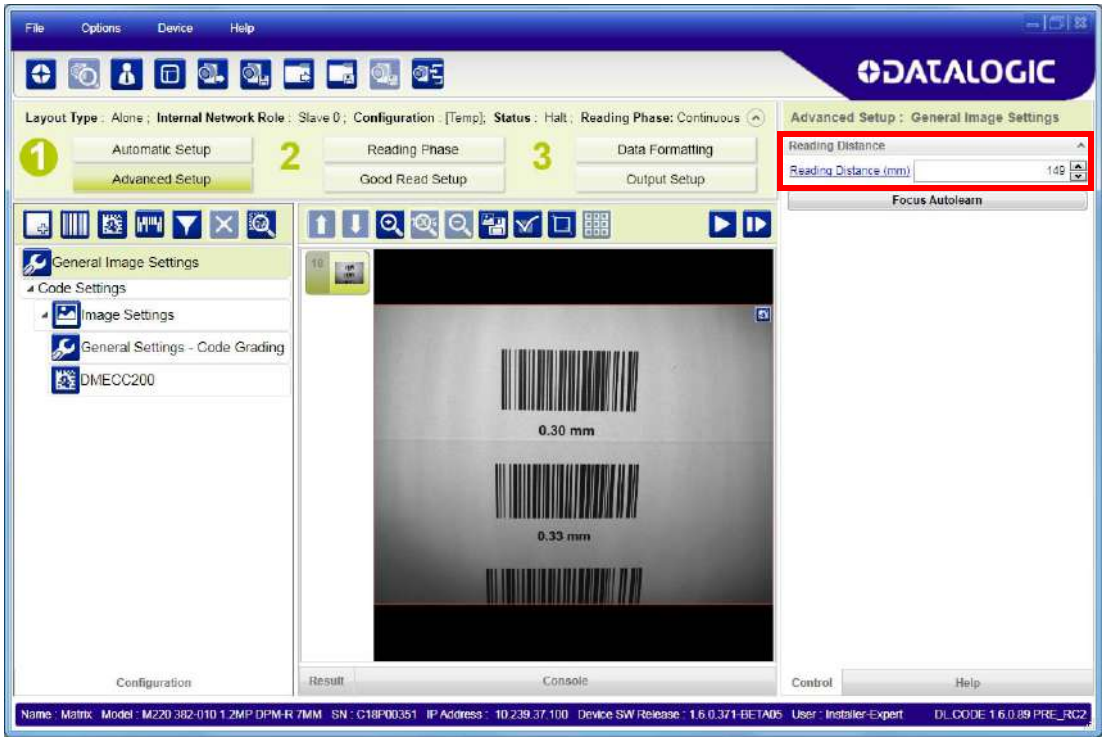

NOTE

To enlarge the visual image of the code view, you can click on the zoom image icon repositioning it on the code.

NOTE

At this point it is probably a good idea to save the configuration from temporary memory to permanent memory giving it a specific name.

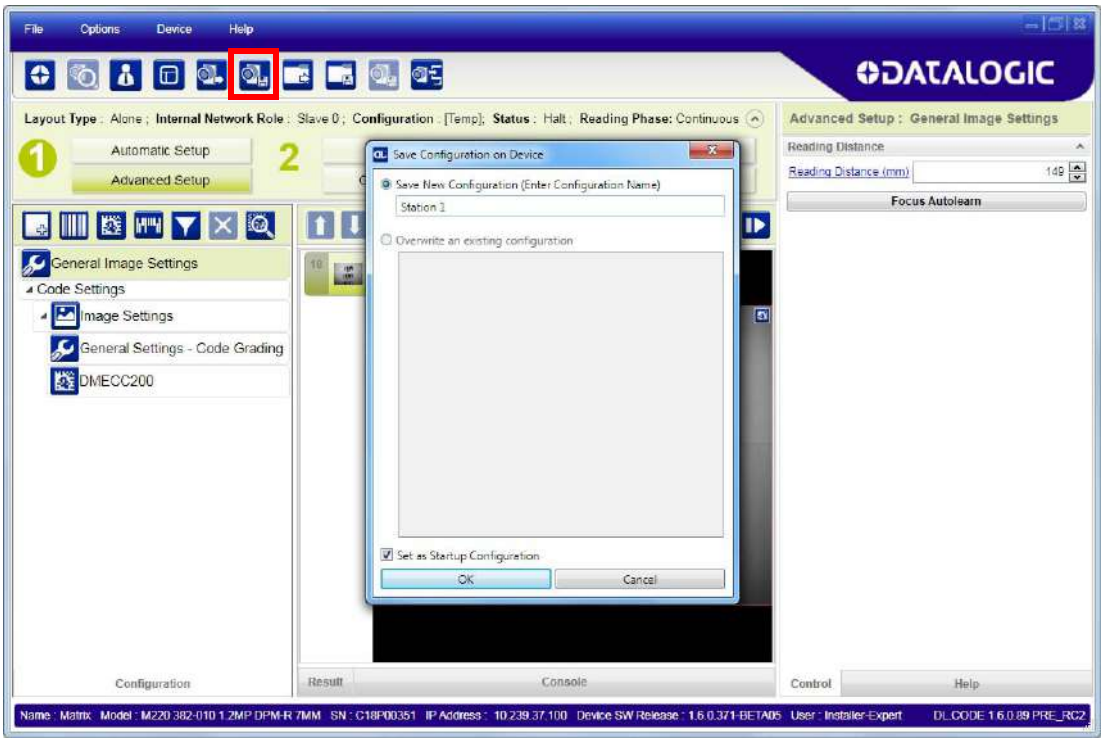

9. Now place **an application specific code** in front of the reader and repeat **only** the Image Auto-Setup to register any changes in lighting or code surface contrast.

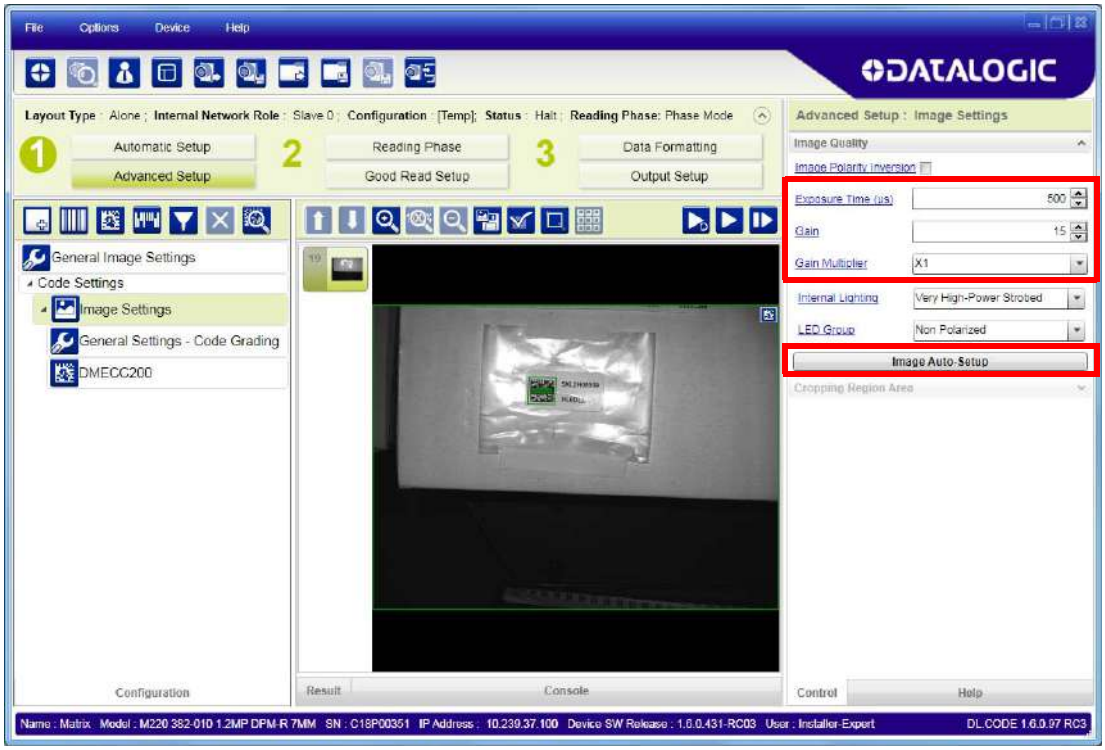

10. Click on the Data Matrix ECC 200 symbology under the Image Settings branch (enabled by default). If this symbology is among those in your application it will be shown in the image display with its code symbology name and a small green box around it indicating it is decoded.

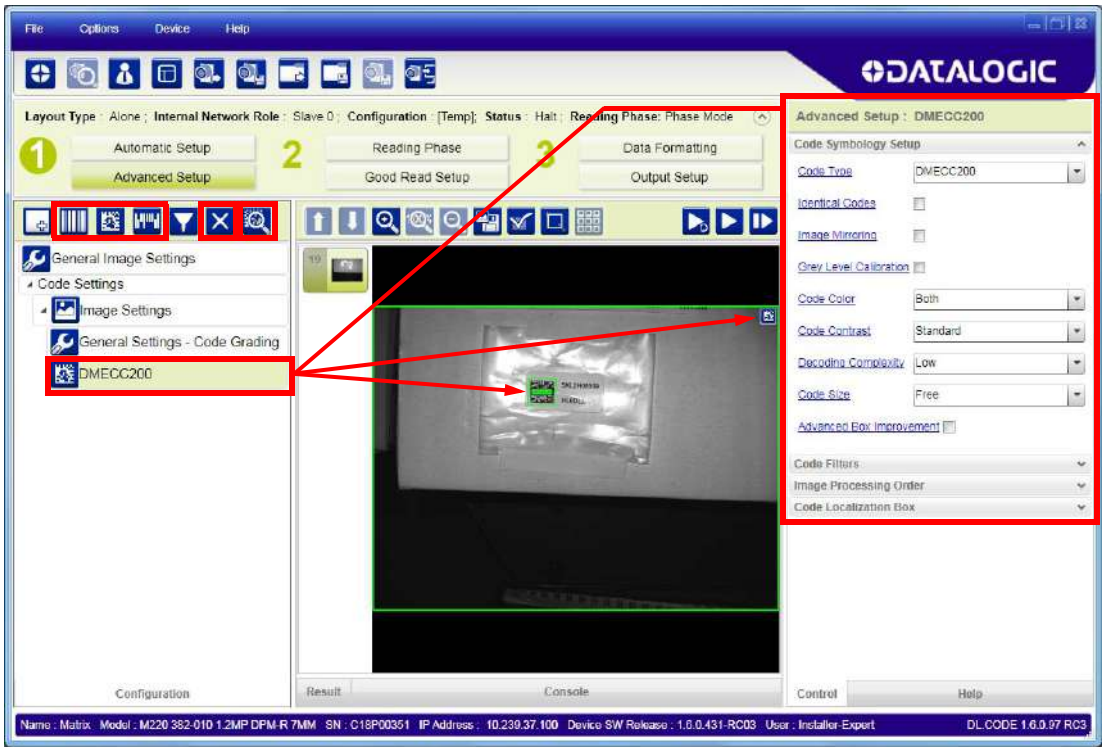

NOTE

The large green box for each symbol indicates the code localization area which by default is equal to the maximum FoV. It can be resized and moved by dragging its borders with the mouse. The code must be found within this area in order to be decoded.

11. Add your application specific codes to the Code Settings by selecting them from the icons over the Configuration Parameters tree area. If the Data Matrix symbology is not used, then delete it from the Code Settings with the Delete icon.

    If you don't know the code type, you can use the Code Autolearn feature by clicking on the Code Autolearn icon.[1] See the DL.CODE User's Manual for details.

12. For each code symbology set the relative parameters according to your application.

Reading Phase

1. Select your application specific Operating Mode from the icons over the Configuration Parameters tree area: Continuous, One Shot or Phase Mode.

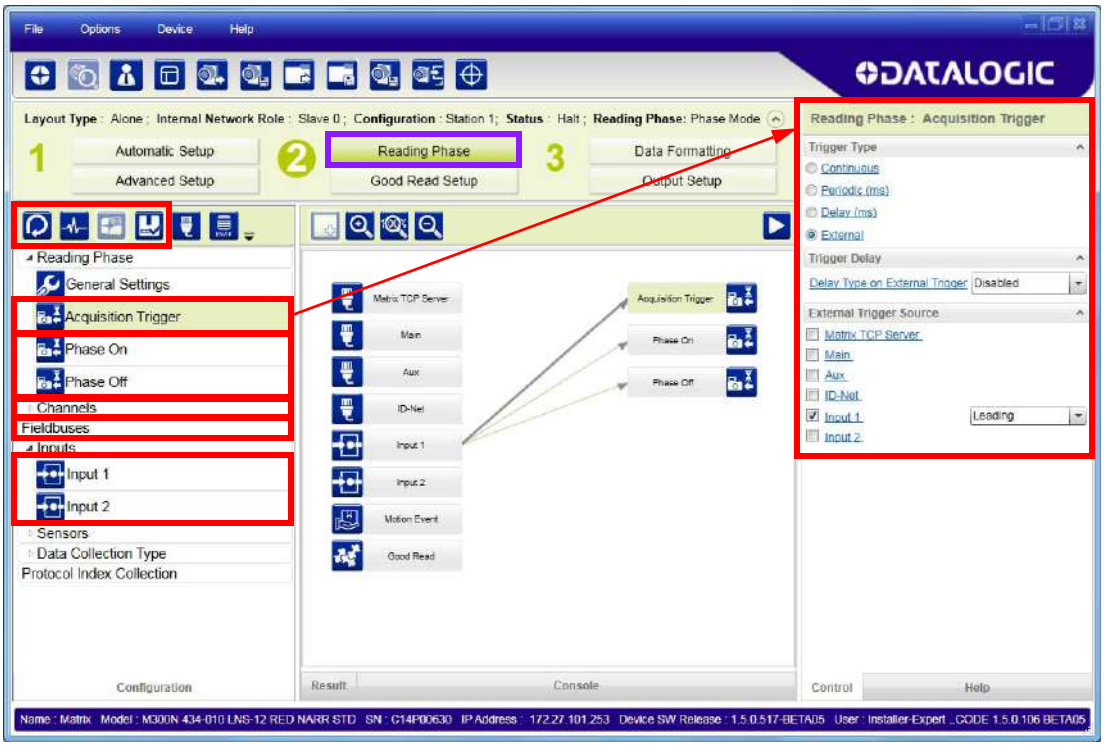

2. Configure the relative Operating Mode parameters from the Reading Phase parameters panel. Different groups will appear in the panel depending on the selected icons over the Configuration Parameters tree area.

1. *The Code Autolearn procedure will not recognize the following symbologies: Pharmacode, MSI, Standard 2 of 5, Matrix 2 of 5.*

Good Read Setup

1. Select your specific data collection type from the icons over the Configuration Parameters tree area: Code Collection, Code Combination, Presentation or Match Code. Not all data collection types are available for all Operating Modes; for example PackTrack Operating Mode only supports Code Combination. Incompatible data collection types will be shown in grey and cannot be selected.

   The following example shows Code Combination. By default, the Expected Codes (when more than one code type is selected), are in logical AND, which means that all codes are required to be decoded to produce a Good Read condition.

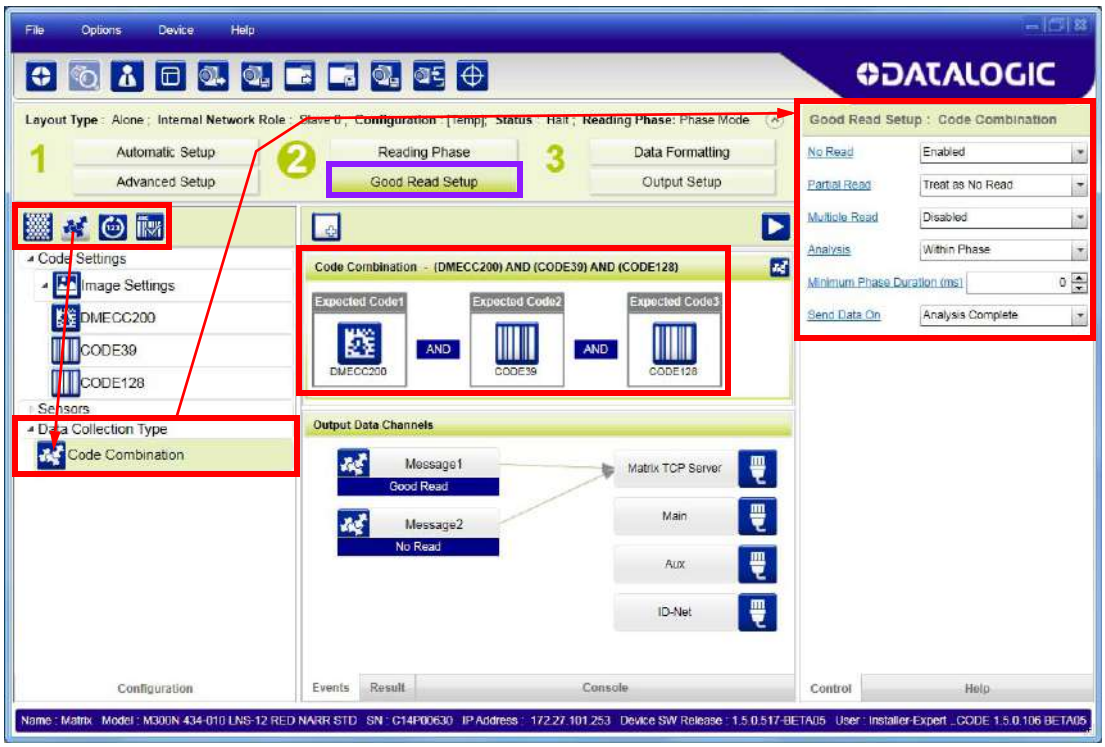

2. If a Good Read condition should be produced when any single code is decoded, independent from the others, then they need to be combined in logical XOR. To do this, drag the code icon(s) from their relative Expected Code box into the Expected Code box of the XOR combination you wish to create. Then delete the empty box by selecting it with the mouse (highlighted) and pressing the delete key on your keyboard.

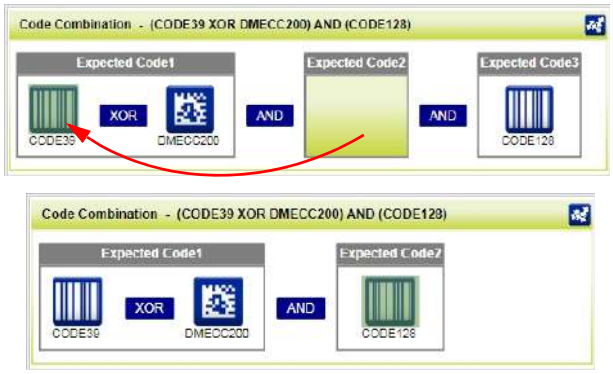

To create a logical AND condition from a logical XOR, create a new Expected Code box using the Add icon. Then drag the desired code icon from one box to the other.

Data Formatting

1. Configure your application specific Data Formatting Message(s) from the Configuration Parameters tree area: Message 1, Message 2, etc.

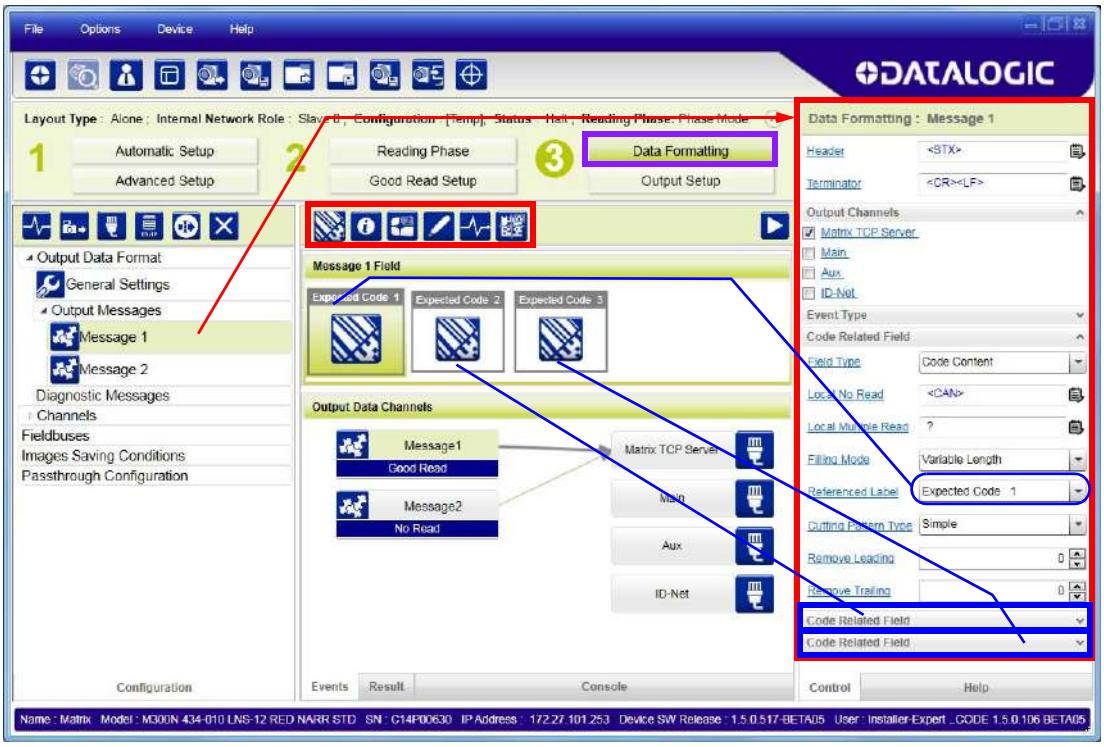

You can add fields to the output message by clicking on the icons above the Message Field area. They will be appended to the message. You can drag them to position them between other fields in the message so that the output message is ordered according to your application requirements.

Each field has its own relative configuration parameters in the parameters panel.

Output Setup

1. Configure your application specific Digital Output(s) and Green/Red Spots (if used) from the Configuration Parameters tree area: Output 1, Output 2, etc.

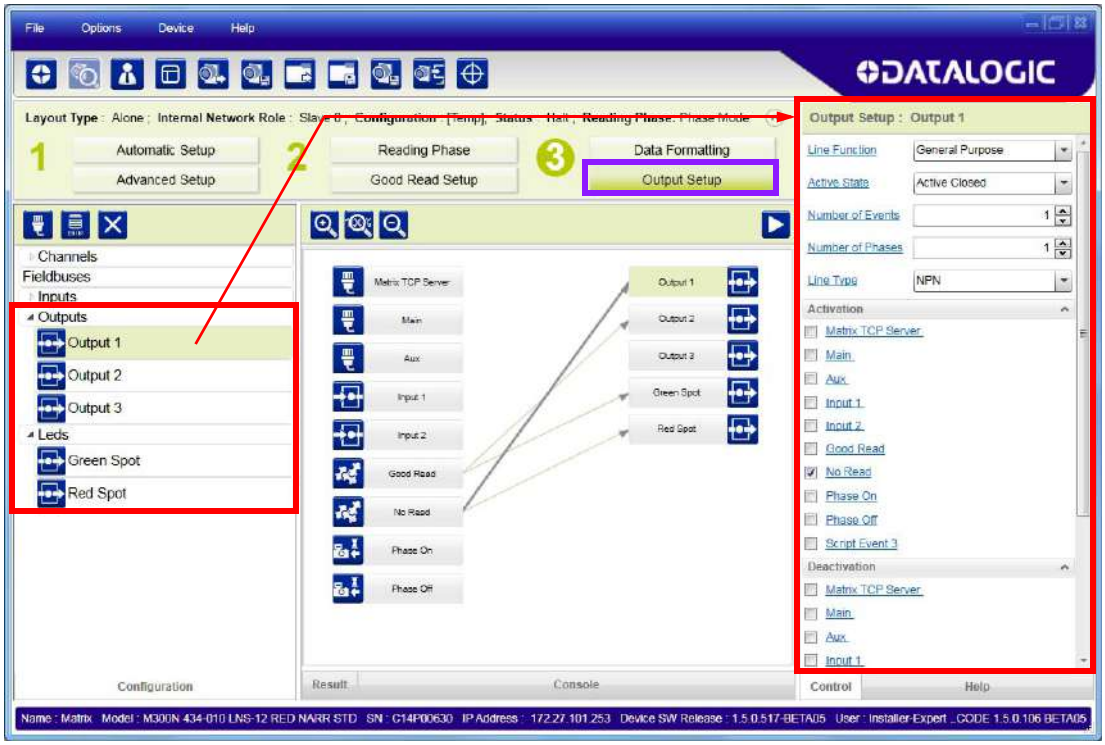

NOTE

Save the configuration from temporary memory to permanent memory, overwriting the previously saved configuration.

Step 7 - Test Mode

Use a code suitable to your application to test the reading performance of the system.

1. Enter the *Test* function by pressing and holding the X-PRESS push button until the Test LED is on.
2. Release the button to enter the *Test* function.

   Once entered, the Bar Graph on the five LEDs is activated and if the reader starts reading codes the Bar-Graph shows the Good Read Rate.

3. To exit the Test, press the X-PRESS push button once.

NOTE

By default, the Test exits automatically after three minutes.

The Bar Graph has the following meaning:

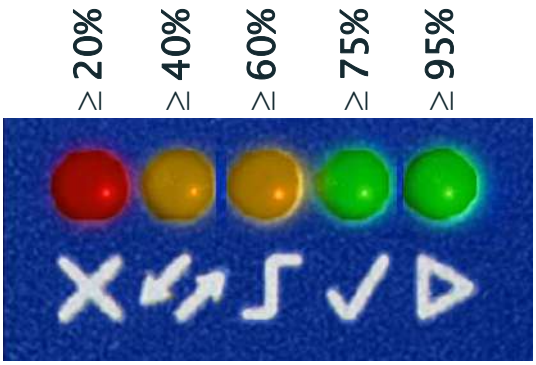

In case of No Read condition, only the STATUS LED (red) is on and blinks.

Advanced Reader Configuration

For further details on advanced product configuration, refer to the DL.CODE User's Guide available in the DL.CODE Help menu.

Host Mode Programming

The reader can also be partially configured from a host computer using the Host Mode programming procedure.

Chapter 2
Introduction

Product Description

The Matrix 220 imager is the most compact image based barcode reader for top performance with the highest flexibility. The ideal imager reader for Electronics, Automotive, Packaging and Document Handling applications.

The Matrix 220 is designed for superior performance thanks to a 1.2 MPixel high resolution sensor, a new platform and stronger decoding libraries.

The integrated powerful and flexible illumination system makes the Matrix 220 imager perfect for solving Direct Part Marking (DPM) code reading and quality grade verification thanks to its innovative lighting solutions. The Matrix 220 offers in a single model the polarized and diffused light options resulting in optimal illumination on any type of surface. The white, red and blue light models are capable of solving a huge variety of applications with the best performance. The electronic focus control allows easy remote job change during assembly line reconfiguration with extreme reading flexibility.

High Power Illuminator models provide double the lighting power and are therefore indicated for high speed applications.

In addition, the Continuous High-Power lighting mode can be selected which is useful in Presentation Mode applications where the LED-array blinking (produced by -Power Strobed lighting modes and rapidly occurring reading phases) would otherwise disturb the operator.

Best ease of use thanks to the green and red spot lights, the X-Press™ button, the intuitive HMI and the DL.CODE™ configuration software improved with the Automatic Setup mode for a quick and easy code reading. ESD and YAG protection are available as front cover accessories to enhance the product flexibility reducing the number of models and simplifying the stock management.

The IP67 and IP65 industrial grade, the operating temperature range from -10°C to 50°C guarantee the best quality and robustness in the Manufacturing Industry applications. The Matrix 220 imager offers cost-effective communication options with Power over Ethernet (POE) connectivity and on-board PROFINET/IO and ETHERNET/IP industrial fieldbus.

Matrix 220 has been developed for use in numerous industries like:

Automotive
- DPM (Direct Part Marked) code validation after marking
- Work-in-progress control
- Assembly traceability

Electronics
- Track and trace PCB board manufacturing
- Electronic components
- Electronic products tracking
- DPM code reading (on plastic, glass, metal)

Packaging
- Primary packaging bar code reading
- Package traceability
- Food & beverage applications

Document Handling
- Fast decoding for high speed applications

This technology intrinsically provides omni-directional reading.

Standard Application Program

A Standard Application Program is factory-loaded onto Matrix 220. This program controls code reading, data formatting, serial port and Ethernet interfacing, and many other operating and control parameters. It is completely user configurable from a Laptop or PC using the dedicated configuration software program DL.CODE, provided on the DL.CODE mini-DVD (downloaded .zip file or mini-DVD accessory).

There are different programmable operating modes to suit various code reading system requirements.

Quick, automatic focus, positioning, calibration and code setting of the imager can be accomplished using the X-PRESS button and LEDs on top of the reader without the necessity of a PC.

The previous functions can also be performed through DL.CODE which includes visual feedback from the reader. This allows verification of the exact positioning of the reader and to maximize its reading performance.

Statistics on the reading performance can also be visualized through a dedicated window in DL.CODE.

Programmability

If your requirements are not met by the Standard Application Program, Custom Application Programs can be requested at your local Datalogic distributor.

Some of the main features of this reader are given below:

Excellent Performance

- 1.2 MPixels (960x1280)
- Electronic Adjustable Focus through software control
- Powerful Internal Lighting Systems
- Outstanding decoding capability on 1D, 2D, Stacked, Postal symbologies
- Excellent performance on DPM applications
- Omni-directional reading
- Frame Rate up to 45 frames/sec
- Image Cropping for higher frame rate

Ease of Setup

- Quick installation without PC by using X-PRESS interface for easy and intuitive setup
- LED pointers for aiming
- Automatic Imager calibration and Code Settings
- Visual Feedback to verify exact code positioning in the Field of View and to maximize the reading performance
- Windows-based DL.CODE software to configure the reader parameters via PC Ethernet interface
- User-defined database of Image Acquisition Settings (parameter sets)

Ease of Use

- X-PRESS interface LEDs provide operational and performance feedback
- Green Spot and beeper for immediate Good Read feedback
- Different operating modes to suit various application requirements
- Multi Image Acquisition Settings for higher reader flexibility
- Image saving and storage with buffering capability
- Diagnostic software tools

Flexible Solution

- Complete set of Accessories like mounting brackets, connection boxes, cables and photocells
- Ethernet Connectivity with TCP/IP socket for reader parameter configuration, data and image transfer, FTP client, etc.
- On-board Ethernet supports EtherNet/IP, PROFINET I/O, Modbus TCP, and OPC UA protocols
- 3 serial communication interfaces (Main, Auxiliary, ID-NET)
- 2 General purpose optocoupled Inputs
- 3 General purpose optocoupled Outputs (when using the CBX connection box)

Versatility

- Excellent reading performance on Direct Part Marked (DPM) symbols
- Code Quality Metrics reporting according to ISO/IEC 16022, ISO/IEC 18004, ISO/IEC 15416 and AIM DPM standards for code quality trending.
- Match Code option with a user-defined match code database

Industrial Strength

- Industrial compact 2D reader
- Rugged metal construction
- Sealed circular M12 connectors
- IP67 protection class
- 50 °C max operating temperature
- Supply voltage ranges from 10 to 30 Vdc

Indicator and Keypad Button

Figure 8 – Indicators

The following LED indicators are located on the reader:

PWR	blue LED indicates that the reader is connected to the power supply (Figure 8, 1)
NET	yellow LED indicates connection to the on-board Ethernet network (Figure 8, 2)

In normal operating mode the colors and meaning of the five LEDs are illustrated in the following table:

STATUS	red LED indicates a NO READ result (Figure 8, 3)
COM	yellow LED indicates active communication on the main serial port * (Figure 8, 4)

TRIGGER	yellow LED indicates the status of the reading phase (Figure 8, 5)
GOOD	green LED confirms successful reading (Figure 8, 6)
READY	green LED indicates that the reader is ready to operate (Figure 8, 7)

* When connected to a Fieldbus network through the CBX500, the COM LED is always active, even in the absence of data transmission, because of polling activity on the Fieldbus network.

During the reader startup (reset or restart phase), these five LEDs blink for one second.

In X-PRESS Configuration mode the colors and meaning of these five LEDs are described in par. X-PRESS Human Machine Interface.

The keypad button (Figure 8, 8), is software programmable. By default it starts the X-PRESS interface for quick installation without using a PC (see "Step 4 - X-PRESS Configuration" on page 6).

Aiming System

There are two red LED pointers that project two equidistant square patterns onto the target area. The code should be centered between the two squares.

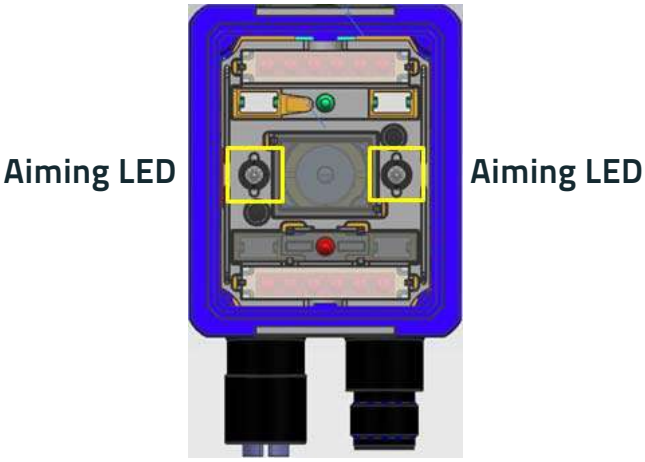

Figure 9 – Matrix 220 Aiming LEDs

LED Spots

There are two LED spots that can be activated to project light onto the target area to give a visible indication that a particular event has occurred. The associated event is configured through DL.CODE and is typically used to signal Good Read/No Read events. The deactivation event can be signal driven or managed by timeout.

Examples:

When associated with the Good Read event, the green spot illuminates the target area to indicate that decoding has occurred correctly according to the configuration requirements.

When associated with the No Read event, the red spot illuminates the target area to indicate that decoding has **not** occurred correctly according to the configuration requirements.(i.e. no code has been read).

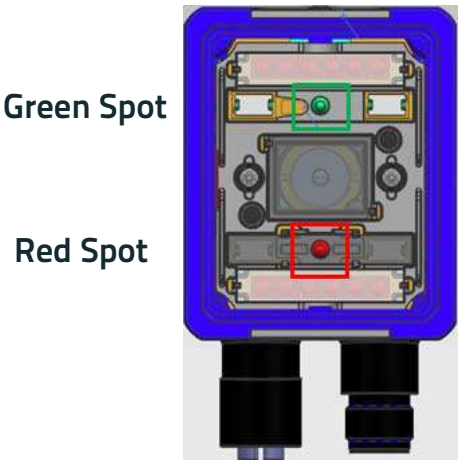

Figure 10 – Matrix 220 Good Read/No Read LED Spots

ID-NET

The ID-NET network is a built-in high-speed interface dedicated for high-speed reader interconnection. ID-NET is in addition to the Main and Auxiliary serial interfaces.

The following network configurations are available:

- **ID-NET Synchronized:** Single station - multiple readers

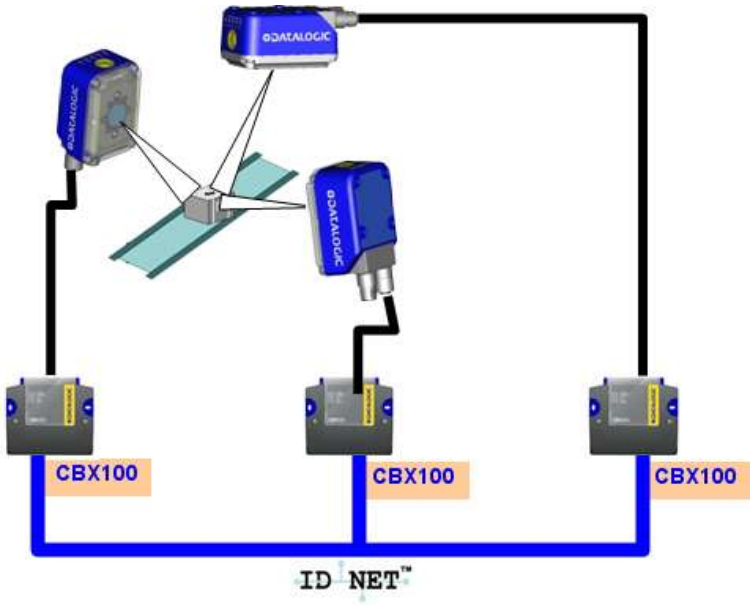

ID-NET interface allows local connection of multiple readers reading different sides of the same target. All readers share a single presence sensor and activate/deactivate simultaneously.

At the end of each reading phase a single data message is transmitted to the host. Thanks to ID-NET, data communication among readers is highly efficient so that an immediate result will be available.

See "ID-NET Interface" on page 72 for connection details and "Internal Network Configurations" on page 139 for configuration details.

- **ID-NET Multidata:** Multiple stations - single reader

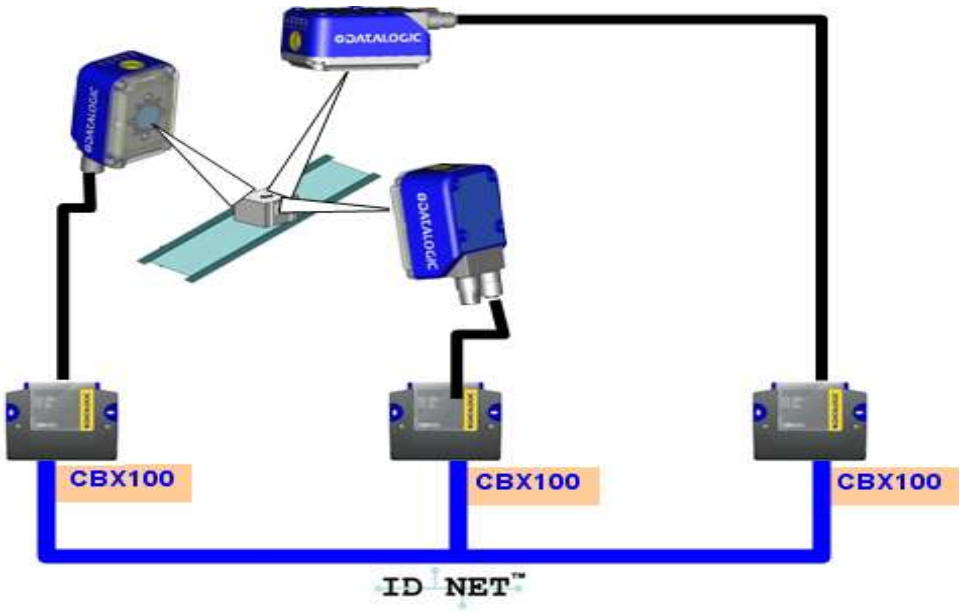

ID-NET interface allows connection of readers reading objects placed on independent conveyors. All readers are typically located far away from each other and they can have different operating modes from each other.

At the end of each reading phase, each reader transmits its own data message to the host. Thanks to ID-NET, data collection among readers is accomplished at a high speed without the need of an external multiplexing device. This leads to an overall cost reduction and to simple system wiring.

See "ID-NET Interface" on page 72 for connection details and "Internal Network Configurations" on page 139 for configuration details.

X-PRESS Human Machine Interface

X-PRESS is the intuitive Human Machine Interface designed to improve ease of installation and maintenance.

Status information is clearly presented by means of the five colored LEDs, whereas the single push button gives immediate access to the following relevant functions:

- Test with bar graph visualization to check static reading performance
- Aim/Autofocus to turn on the LED pointers to aid positioning and focusing
- Setup to perform Exposure Time and Gain calibration
- Learn to self-detect and auto-configure for reading unknown codes

X-PRESS Functions

Quick access to the following functions is provided by an easy procedure using the push button:

1. **Press** the button (the Status LED will give a visual feedback).
2. **Hold** the button until the specific function LED is on (Test, Aim, Setup or Learn).
3. **Release** the button to enter the specific function.

Once button is pressed, the cycle of LEDs activation is as follows:

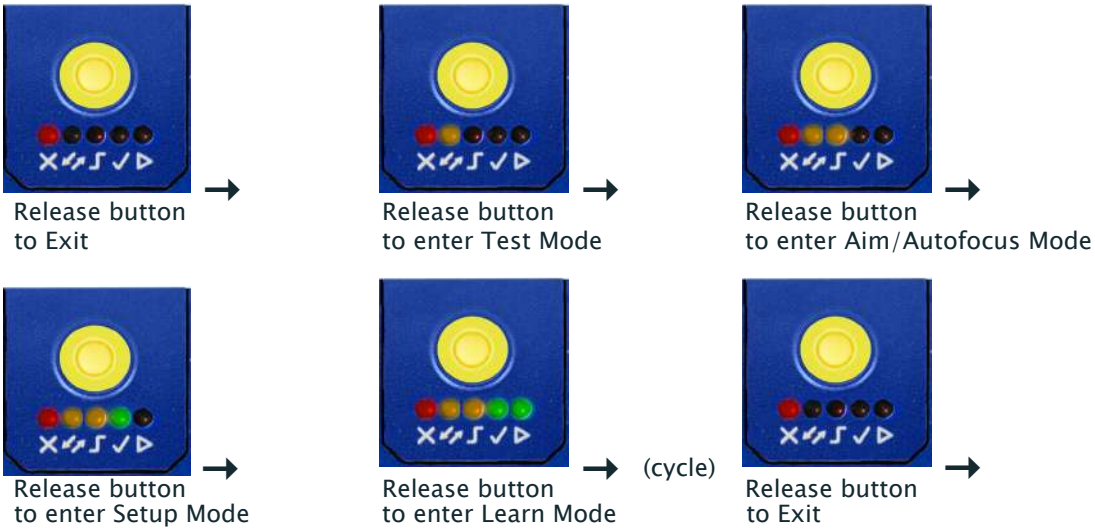

Test Mode

Once entered, the Bar Graph on the five LEDs is activated and if the imager starts reading codes the Bar-Graph shows the Good Read Rate. The Bar Graph has the following meaning:

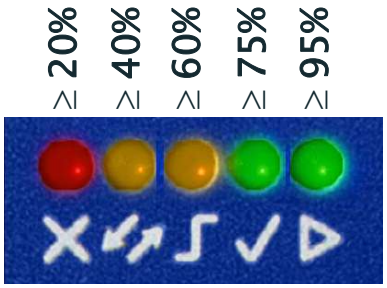

In case of a NO READ condition, only the Status LED (red) is on and blinks.

To exit the Test Mode, press the X-PRESS push button once.

NOTE

By default, the Test exits automatically after three minutes.

Focus/Aim

This function causes the LED indicators to turn on. The aiming pattern is centered on the FOV vertically and horizontally. It can be used to position the imager on the code. The Aim LED blinks to indicate this state.

You can exit the Focus/Aim function at any time by pressing the X-PRESS push button once. After a short delay the aiming LED indicators turn off.

Setup

Once entered, the imager automatically performs Image Acquisition parameter calibration for the specific code presented to it.

The Setup LED will blink until the procedure is completed.

The Setup procedure ends when the Image Acquisition parameters are successfully saved in the reader memory, the Setup LED will stop blinking and Matrix 220 emits 3 high pitched beeps.

If the calibration cannot be reached after a timeout of about 5 (five) seconds Matrix 220 will exit without saving the parameters to memory, the Setup LED will stop blinking and in this case Matrix 220 emits a long low pitched beep.

Learn

Once entered, the imager starts a procedure to automatically detect and recognize **a single code** which is presented to it. Successive Learns will substitute the current code.

The Learn LED will blink until the procedure is completed.

The Learn procedure ends when the Image Processing and Decoding parameters are successfully saved in the reader memory, the Green Spot is activated, the Learn LED will stop blinking and Matrix 220 emits 3 high pitched beeps.

If the autolearning cannot be reached after a timeout of about 3 (three) minutes, Matrix 220 will exit without saving the parameters to memory, the Learn LED will stop blinking and in this case Matrix 220 emits a long low pitched beep.

You can exit the Learn function at any time by pressing the X-PRESS push button once. After a short delay the Learn procedure is cancelled.

Diagnostic Indication

The “STATUS” (red) and “READY” LED (green) blink simultaneously to signal the presence of an error. Diagnostic message transmission on interfaces can be enabled to provide details about specific error conditions. See the Diagnostic Error Conditions chart in the Diagnostic page of the DL.CODE Monitor.

	LED	STATUS
	Ready	Blink
	Good	
	Trigger	
	Com	
	Status	Blink

Model Description

Matrix 220 readers are described by their model number which indicates the characteristics listed in the diagram below. Not all combinations are available. For a complete list of combinations see the Models tab on the Product page of the website.

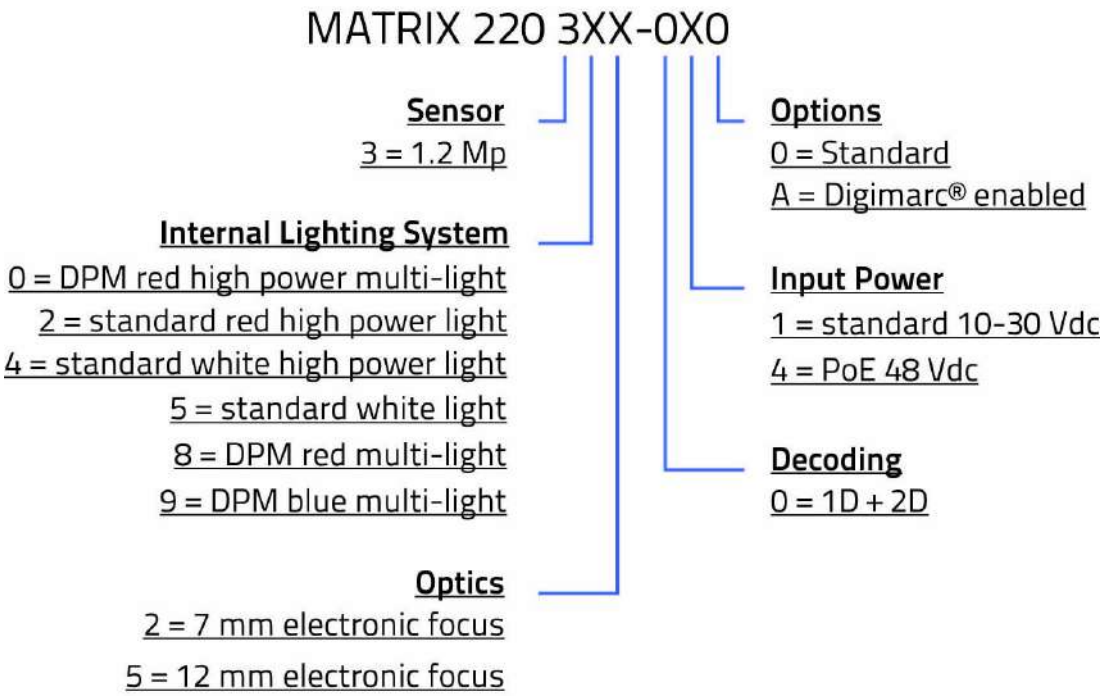

Internal Lighting Systems

There are several different models of Internal Lighting Systems for Matrix 220 readers.

- Standard models have 4 white light LEDs.
- Standard High Power Illuminator models have 8 white light LEDs supplying twice the lighting power as the Standard model.
- The DPM Internal Lighting System has a combination of three different types of Illuminators which can be selected individually depending on the Direct Part Mark application requirements. There are Red or Blue light DPM models.
- DPM High Power Illuminator models have Polarized and Non-Polarized red light Illuminators which supply twice the lighting power as the DPM models for these illumination types.

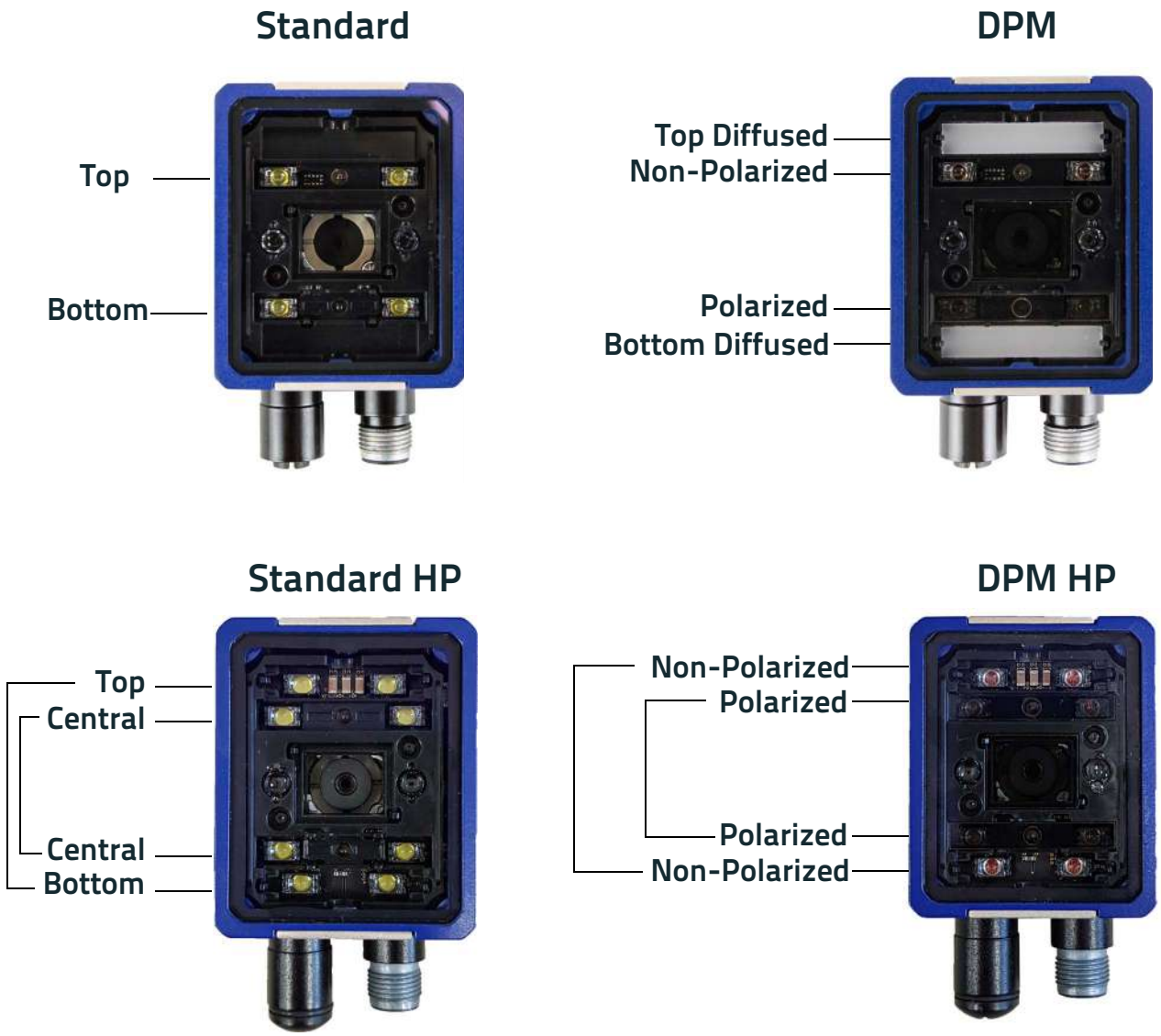

Figure 11 – Matrix 220 Illuminators

Model	Illumination Combinations
Standard White	
Top + Bottom	
Top	
Bottom	
DPM Red	
Diffused Top + Bottom	
Diffused Top	
Diffused Bottom	
Non Polarized	
Polarized	
DPM Blue	
Diffused Top + Bottom	
Diffused Top	
Diffused Bottom	
Non Polarized	
Polarized	
Standard High Power White	
Central + Top/Bottom Chain	
Central Chain	
Top/Bottom Chain	
Standard High Power Red	
Central + Top/Bottom Chain	
Central Chain	
Top/Bottom Chain	
DPM High Power Red	
Polarized	
Non Polarized	

Accessories

The following accessories can be used with the Matrix 220 reader.

Accessory	Description	Order No.
Cables		
CAB-DS01-S	M12-IP67 Cable To CBX or QL (1M)	93A050058
CAB-DS03-S	M12-IP67 Cable To CBX or QL (3M)	93A050059
CAB-DS05-S	M12-IP67 Cable To CBX or QL (5M)	93A050060
CAB-F-M12-17P01 IP67 FLEX CAB TO CBX 1M	M12-IP67 Flexible Power Cable (1M) for linear and torsion moving applications	93A050116
CAB-F-M12-17P03 IP67 FLEX CAB TO CBX 3M	M12-IP67 Flexible Power Cable (3M) for linear and torsion moving applications	93A050117
CAB-F-M12-17P05 IP67 FLEX CAB TO CBX 5M	M12-IP67 Flexible Power Cable (5M) for linear and torsion moving applications	93A050118
CAB-F-ETH-M01 M12-IP67 GETH-X FLEX CAB1M	M12-IP67 Flexible Ethernet Cable (1M) for linear and torsion moving applications	93A050125
CAB-F-ETH-M03 M12-IP67 GETH-X FLEX CAB3M	M12-IP67 Flexible Ethernet Cable (3M) for linear and torsion moving applications	93A050126
CAB-F-ETH-M05 M12-IP67 GETH-X FLEX CAB5M	M12-IP67 Flexible Ethernet Cable (5M) for linear and torsion moving applications	93A050127
CAB-XB02	D-Sub 25p to 25p Extension Cable	93A051384
CAB-ETH-X-M01	M12-IP67 GIGA Ethernet Cable X-Coded (1M)	93A050122
CAB-ETH-X-M03	M12-IP67 GIGA Ethernet Cable X-Coded (3M)	93A050123
CAB-ETH-X-M05	M12-IP67 GIGA Ethernet Cable X-Coded (5M)	93A050124
CAB-ETH-X-RJ	Adapter Cable GIGA Ethernet X-Coded M12 to RJ45	93A050128
CAB-ETH-X-D	Adapter Cable GIGA Ethernet X-Coded to Ethernet D-Coded	93A050129
CS-A1-03-U-03	PoE COM/Trigger Cable M12/5P Female to Free Wires (3M)	95ASE1170
CS-A1-03-U-05	PoE COM/Trigger Cable M12/5P Female to Free Wires (5M)	95ASE1180
CBL-1480-01	Thin M12/5P Male/Female (1M)	93A050049
CBL-1480-02	Thin M12/5P Male/Female (2M)	93A050050
CBL-1490	Term. Resist. Thin M12/5P/Male	93A050046
CBL-1496	Term. Resist. Thin M12/5P/Female	93A050047
Connectivity		
CBX100	Compact Connection Box	93A301067
CBX500	Modular Connection Box	93A301068
BM100	Backup Module for CBX100/500	93ACC1808

Accessory	Description	Order No.
BM150	Display Module for CBX500	93ACC1809
Various Fieldbus Host Interface Modules and All-In-One Connection Box Kits are available		
BA100	DIN Rail Adapters	93ACC1821
BA200	Bosch and 80/20 Profile Adapters	93ACC1822
Various M12 Panel Connectors for CBX Connection Boxes are available		
BA900	Two Cable Glands Panel	93ACC1847
QL100	Quick Link Slave ID-NET T-Connector	93ACC1860
QL150	Quick Link Slave ID-NET + Service T-Connector	93ACC1868
QL200	Quick Link Slave ID-NET + Power T-Connector	93ACC1861
QL300	Quick Link Master ID-NET - Serial Host Connector	93ACC1862
QLM500	Quick Link Metal Master ID-NET - Ethernet/IP Gateway	93ACC0037
QLM600	Quick Link Metal Master ID-NET - Profibus Gateway	93ACC0033
QLM700	Quick Link Metal Master ID-NET - Profinet I/O Gateway	93ACC0038
Various M12 Service Cables and Field Mount Connectors are available for Quick Link Series Connectors		
Power Supplies		
PG6002	AC/DC Power Supply Unit (US)	93ACC1718
PG6001	AC/DC Power Supply Unit (UK)	93ACC1719
PG6000	AC/DC Power Supply Unit (EU)	93ACC1720
Sensors		
MEP-593	Photocell Kit PNP (PH-1)	93ACC1791
MEP-543	Photocell Kit-NPN	93ACC1728
S3Z-PR-5-C11-PL	Diffuse Proximity Sensor	95B010011
Bracket		
BK-22-000	Fixing Bracket M220 Body	93ACC0230
Covers[a]		
ESD	ESD Safe Window Cover M220	93ACC0227
YAG	YAG Cut Filter Window Cover M220	93ACC0228
ESD+YAG	ESD Safe YAG Cut Filter Win Cover M220	93ACC0229

a. See note on IP Protection Class in Chapter 10.

Application Examples

Document Handling

Matrix 220 is profitably used in the omnidirectional reading of 2D, stacked, linear and postal codes for example in automated document handling and mail processing systems.

Figure 12 – Address Coded in Data Matrix Symbology for Automated Mail Processing

Deformed or Overprinted Code Reading

Matrix 220 assures the reading of deformed and/or overprinted codes, even though damaged or printed on high reflective surfaces.

Figure 13 – Unidose Flow-Pack with PDF417 Code

Figure 14 – Overprinted Barcode Readable by Matrix 220 also Through the Envelope Window Film

Figure 15 – Barcode Printed on Curved Surface Readable by Matrix 300N in spite of Image Optical Distortion

Direct Part Marking

Matrix 220 is also very powerful in reading low-contrast direct part marked codes.

Figure 16 – Dot Matrix Code Directly Marked on Metal Surface by Using Dot Peening Technology

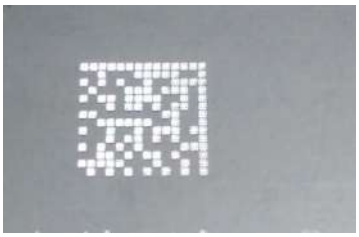

Figure 17 – Dot Peening Marking on Metal Surface with Multi-dot per Code Element

Figure 18 – Directly Marked Dot Matrix Code Characterized by Outstanding Separation Distance between Adjacent Code Elements

Ink-Jet Printing Technology

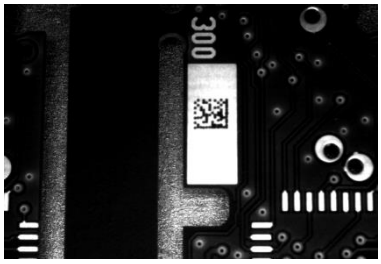

Figure 19 – Dot Matrix Code Directly Marked on PCB Copper Pad by Using Ink-Jet Technology

Color Code/Background

Matrix 220 Red or Blue light illuminator DPM models can be used to maximize contrast in applications where codes or backgrounds are printed in different colors.

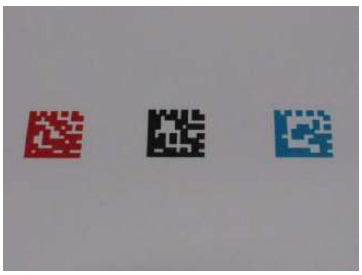

Figure 20 – Data Matrix Codes Printed in Color or on Colored Backgrounds

Laser Marking/Etching Technology

Figure 21 – Data Matrix Code Directly Marked on PCB Surface by Using Laser Etching Technology

CAUTION

If application codes must be read which are produced by Laser Marking in real time, use Matrix 220 models incorporating YAG Filters in order to avoid burning the CMOS sensor.

Digimarc Barcode

The following Matrix 220 models can read content enhanced with Digimarc Barcode:

Part number	Description
937900017	Matrix 220 322-01A 1.2MP STD-R 7mm HP
937900018	Matrix 220 325-01A 1.2MP STD-R 12mm HP

Digimarc Barcode is a technology for product packaging and labeling that enables encoding a Global Trade Identification Number (GTIN) imperceptibly into artwork prior to printing. The GTIN carried by Digimarc Barcode is the same as a traditional GTIN typically found in a product's UPC/EAN barcode.

Digimarc Barcode is designed to be redundantly spread throughout an entire product package or printed material. This enables easy, reliable optical capture without interfering with design aesthetics.

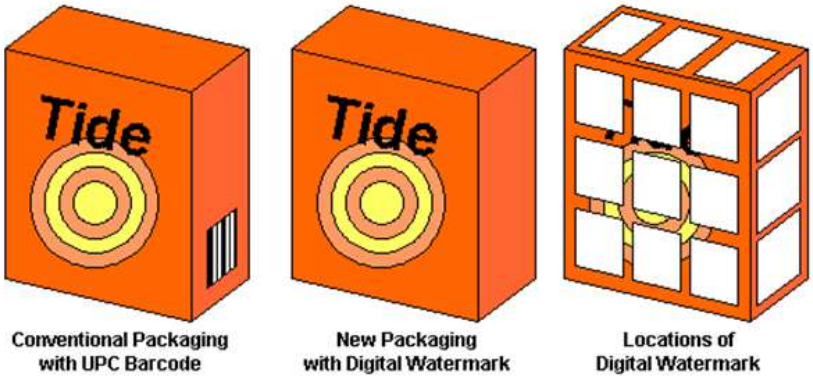

Figure 22 – Digimarc Barcode distributed on all sides of the packaging

DWCODE™ is the name that GS1 US and GS1 Germany use to describe a Digimarc Barcode data carrier. A DWCODE includes the Global Trade Item Number (GTIN), i.e. a globally unique number used to identify trade items, products or services. This number is typically found in barcodes such as Universal Product Code (UPC) or European Article Number (EAN).

The process of incorporating a Digimarc Barcode data carrier into artwork is referred to as enhancement. Thanks to this process, Digimarc Barcode is imperceptible to the human eye but detectable to enabled camera-based scanners and mobile applications.

Figure 23 – Enhancement process

For more information on the Digimarc® technology and application examples, download our Digimarc Technical Note from Datalogic website.

For quick access, from the home page click on the search icon, and type in “Digimarc”. This allows you access to download Data Sheets, Manuals, and everything related to Digimarc Barcode.

High Dynamic Range (HDR) feature

All Matrix 220 models support the High Dynamic Range (HDR) feature. HDR performs an image dynamic correction where low intensity pixel values are enhanced, thus improving image contrast and code readability.

This feature proves particularly useful in the following cases:

- To adjust contrast when the outer area of the image is less exposed than the central area because of a large **Skew angle**:

HDR disabled	HDR enabled

- To adjust contrast when a **DPM illuminator** is used. In this case, at short distances (e.g. 50 mm) the image contrast in the FoV may result heterogeneous. The HDR feature helps normalize image contrast allowing the use of Standard Contrast decoding:

HDR disabled	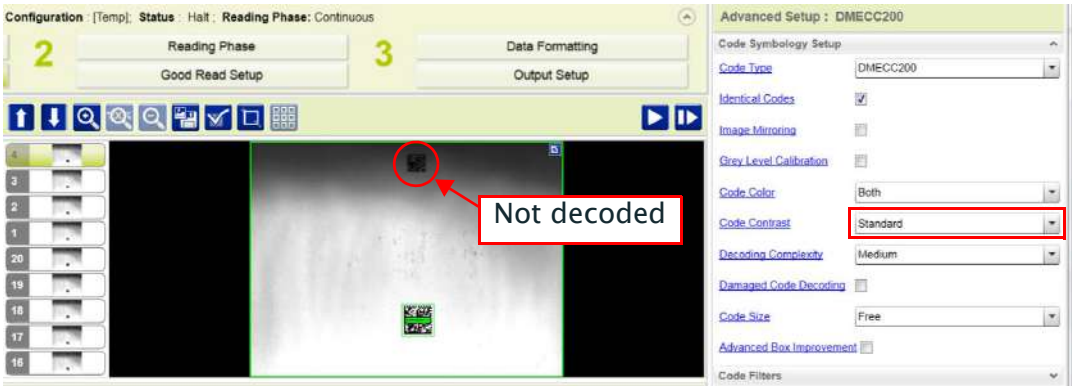
HDR enabled	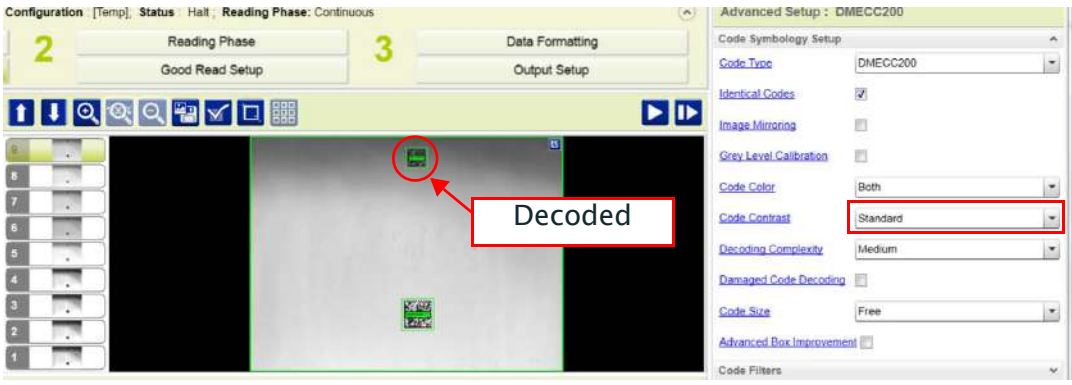

- To improve decodability when the FoV includes codes with **different levels of contrast**:

HDR disabled	HDR enabled
	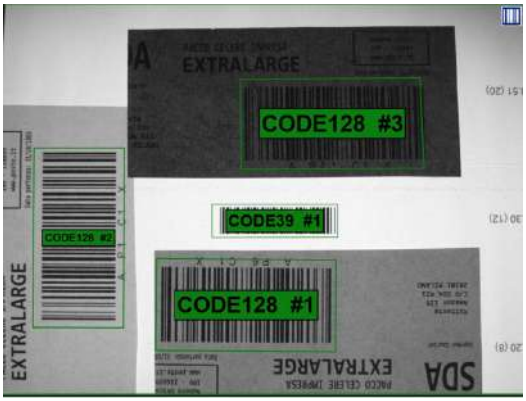

In the example above, when HDR is disabled only two out of four codes are decoded. After enabling HDR, all four codes are decoded.

- In **high speed applications**, because Exposition Time can be reduced when HDR is enabled. The allowed Exposition Time (T_{exp}) must be less than the code resolution (**X**) divided by the line speed (**LS**):

$$T_{exp} < (X/\ LS)$$

HDR disabled	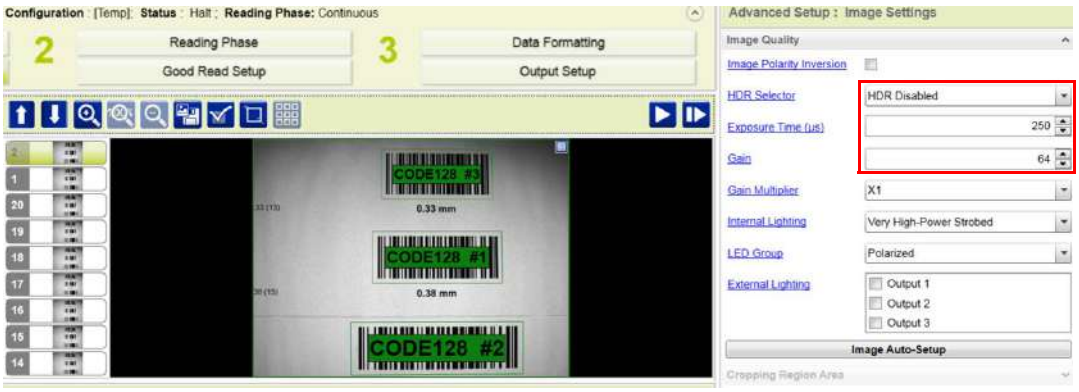
HDR enabled	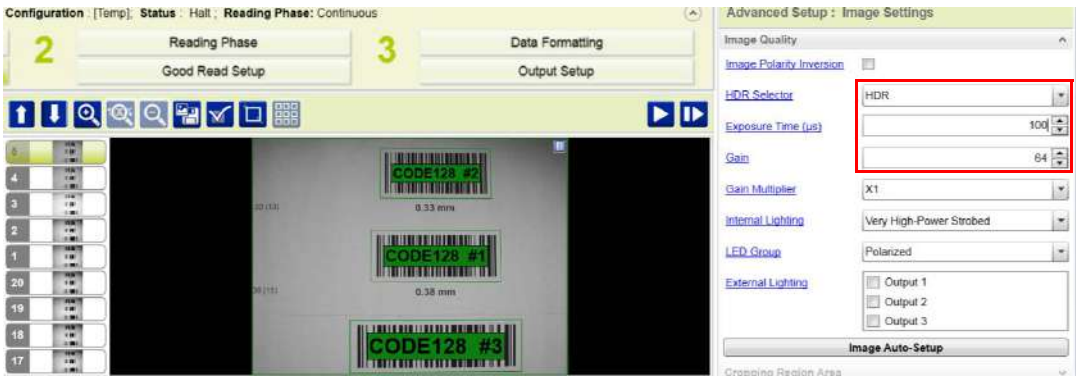

In the example above, C128 13 mils (0.33 mm) codes at a distance of 200 mm must be decoded. When HDR is disabled, good image contrast is obtained with the Exposition Time set to 250 µs, which allows a theoretical maximum application speed of 1320 mm/s. When HDR is enabled, the Exposure Time can be reduced to 100 µs, which allows a theoretical maximum application speed of 3300 mm/s.

For more details on line speed and exposure time calculations, refer to “Maximum Line Speed and Exposure Time Calculations” on page 112.

To enable the HDR function on DL.CODE, go to Advanced Setup>Image Settings>Image Quality>HDR Selector, then select HDR.

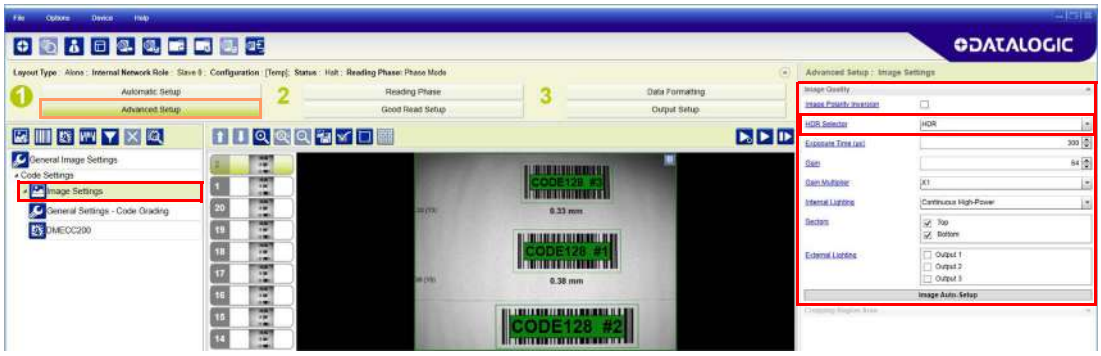

Figure 24 – Enabling HDR on DL.CODE

NOTE

When HDR is enabled, we recommend setting the GainMultiplier to x1.

Chapter 3
Installation

Package Contents

Verify that the Matrix 220 reader and all the parts supplied with the equipment are present and intact when opening the packaging; the list of parts includes:

- Matrix 220 reader (w/connector plug/cover)
- Quick Reference Guide
- Test Chart
- Mounting Kit
- Mounting Screws (2)
- Washers (2)
- Mounting Bracket

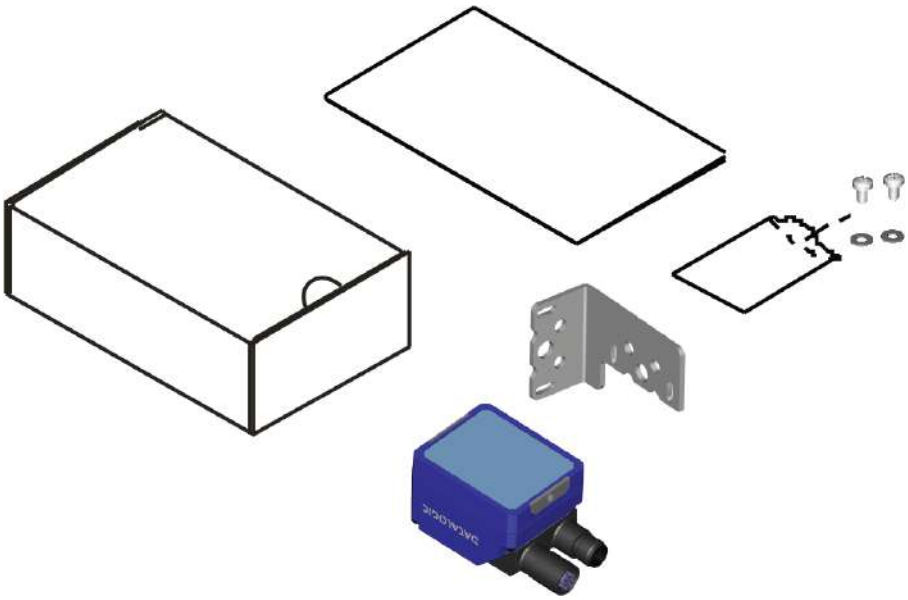

Figure 25 – Package Contents

For Ethernet models the sealing connector plug provides IP67 protection when Ethernet is not used. For PoE models the COM/Trigger connector cover provides this protection when not used.

Mechanical Dimensions

Matrix 220 can be installed to operate in different positions. The two screw holes (M3 x 4mm depth) on the body of the reader are for mechanical fixture.

The diagrams below give the overall dimensions of the reader and may be used for its installation.

Refer to page 58 for various mounting solutions and correct positioning, and Chapter 6 for FOV vs. Reading Distance considerations.

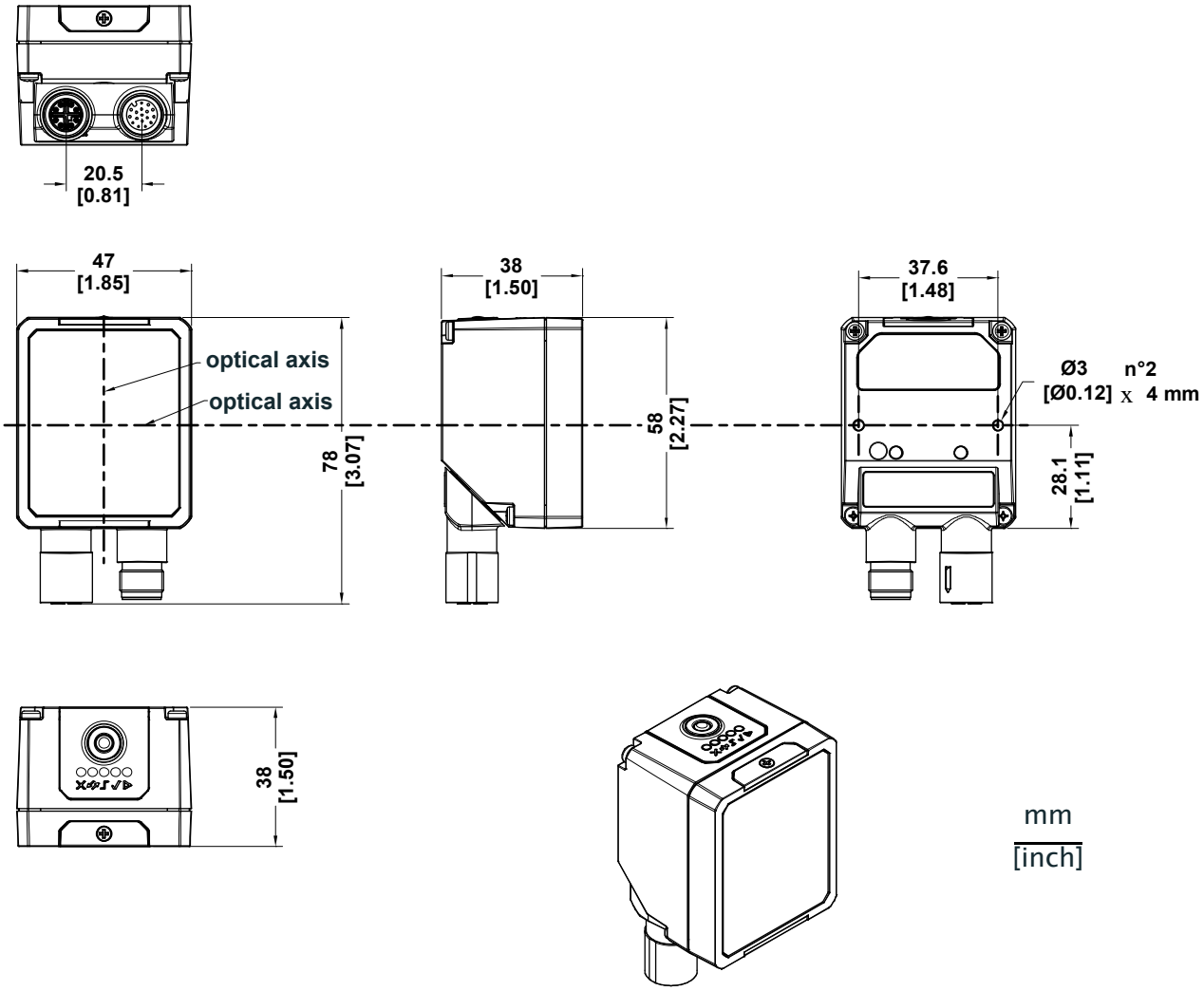

Figure 26 – Overall Dimensions Standard Models; Connector at 0°

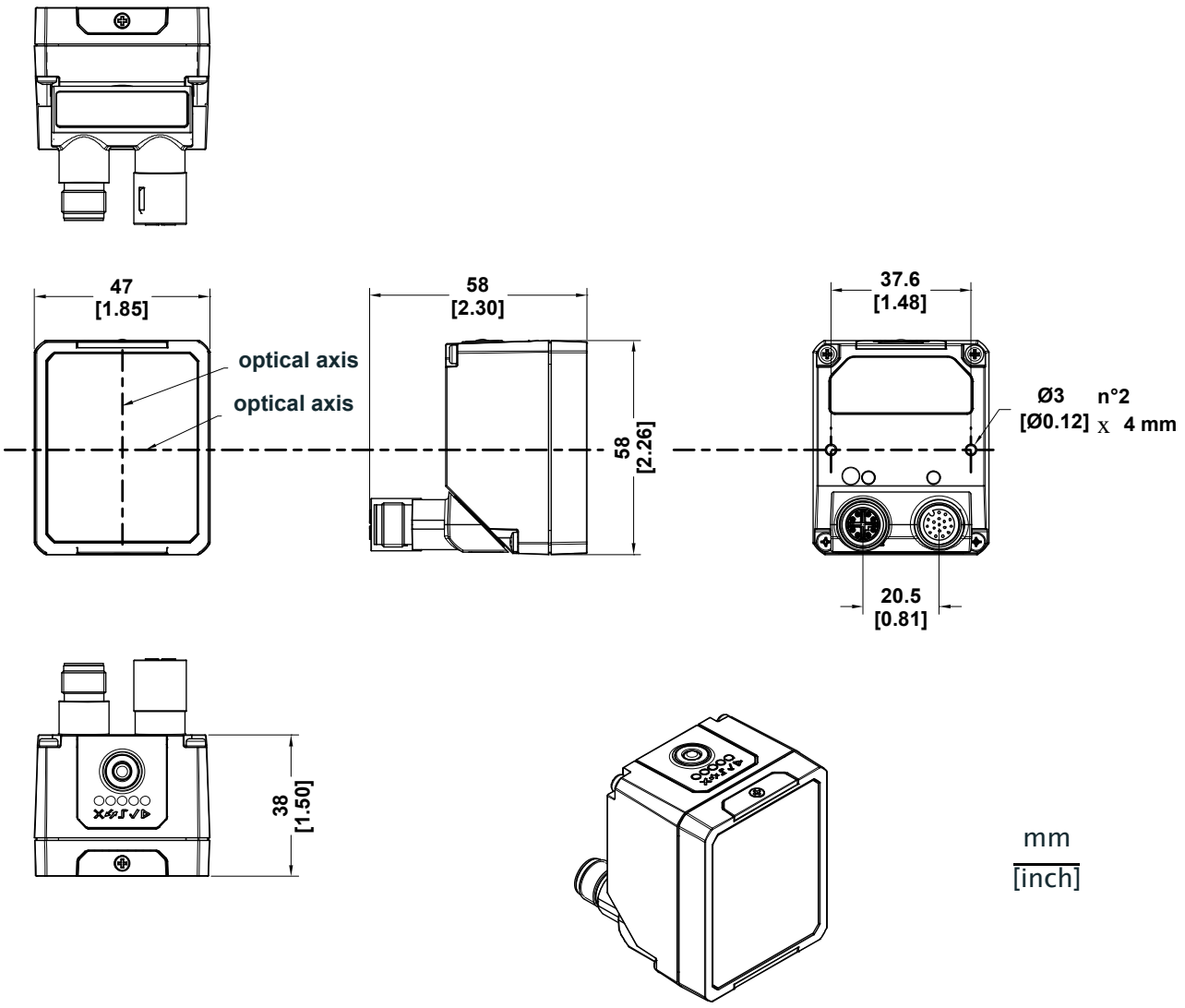

Figure 27 – Overall Dimensions Standard Models; Connector at 90°

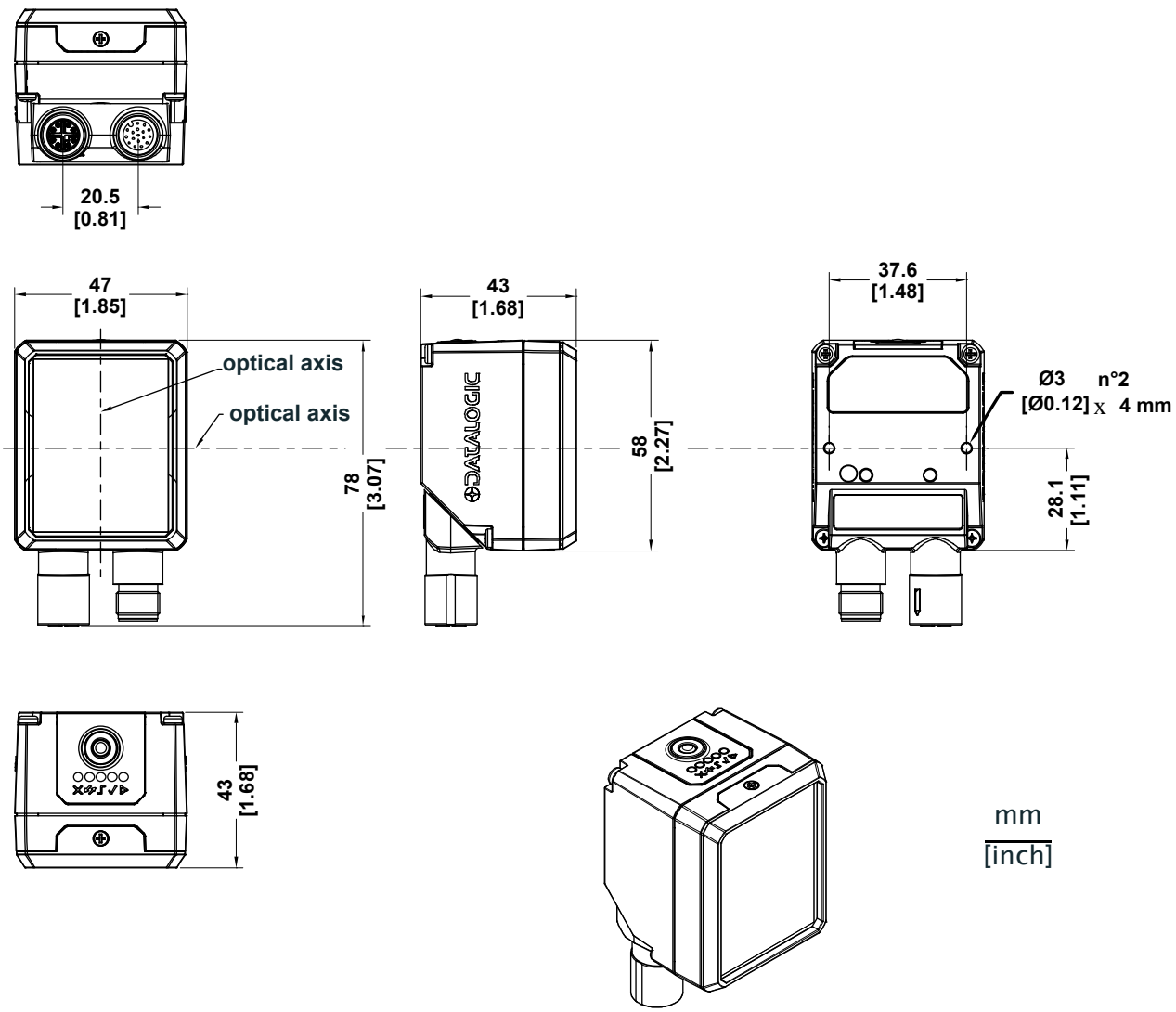

Figure 28 – Overall Dimensions with Accessory Cover (ESD or YAG); Connector at 0°

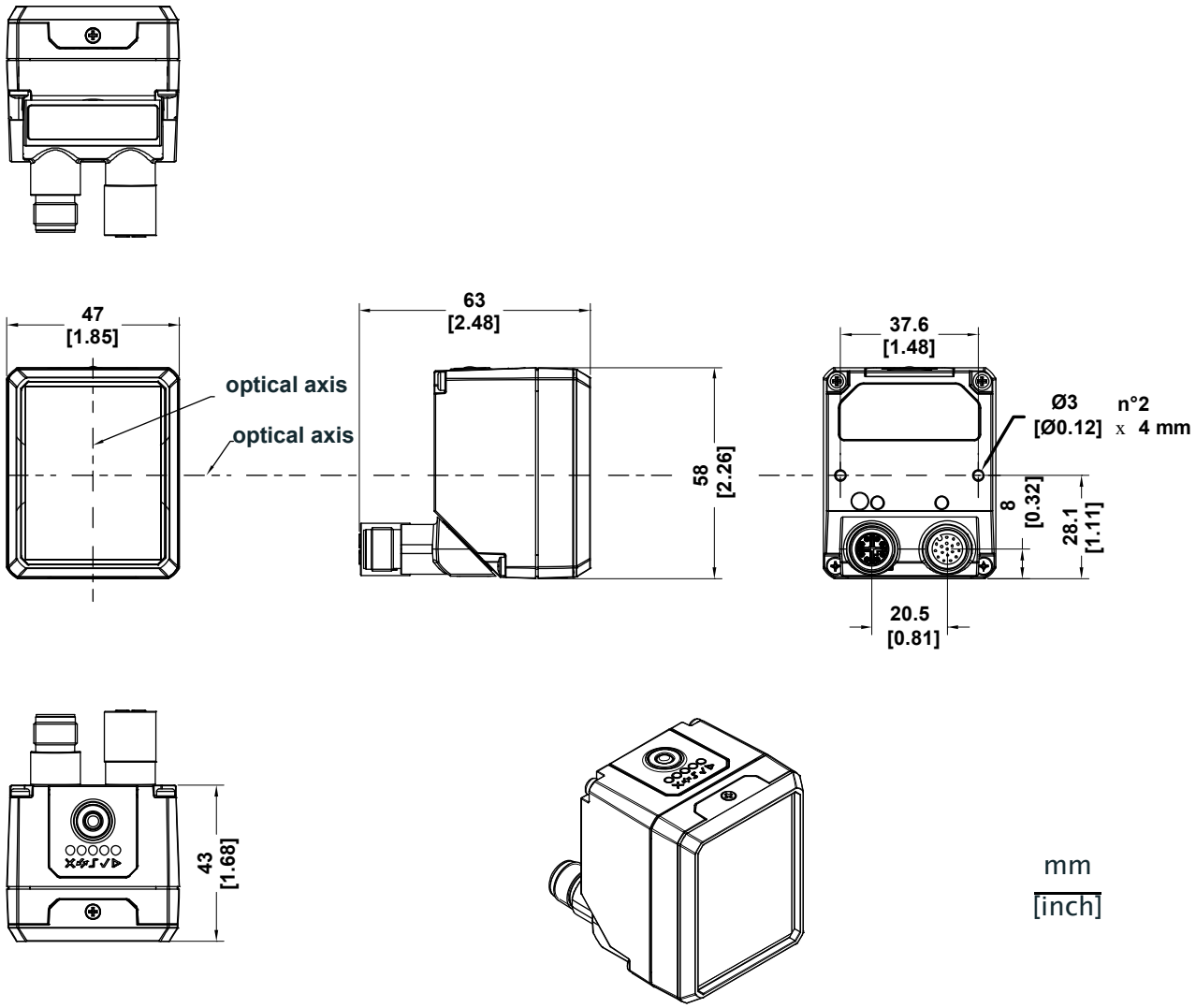

Figure 29 – Overall Dimensions with Accessory Cover (ESD or YAG); Connector at 90°

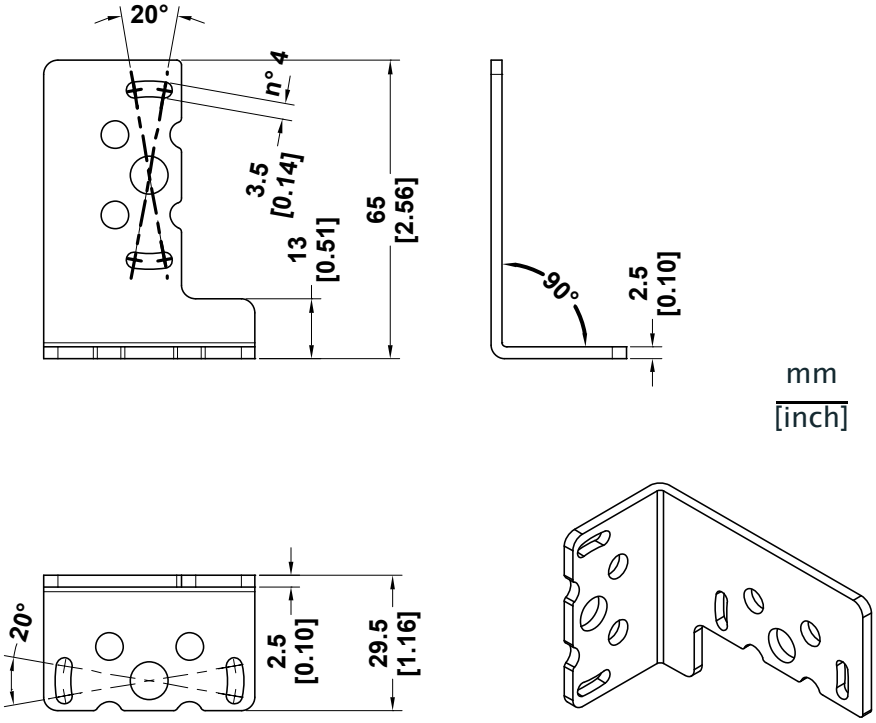

Figure 30 – Mounting Bracket Overall Dimensions

Mounting And Positioning Matrix 220

Using the Matrix 220 mounting brackets you can obtain rotation on the various axes of the reader as shown in the diagram below:

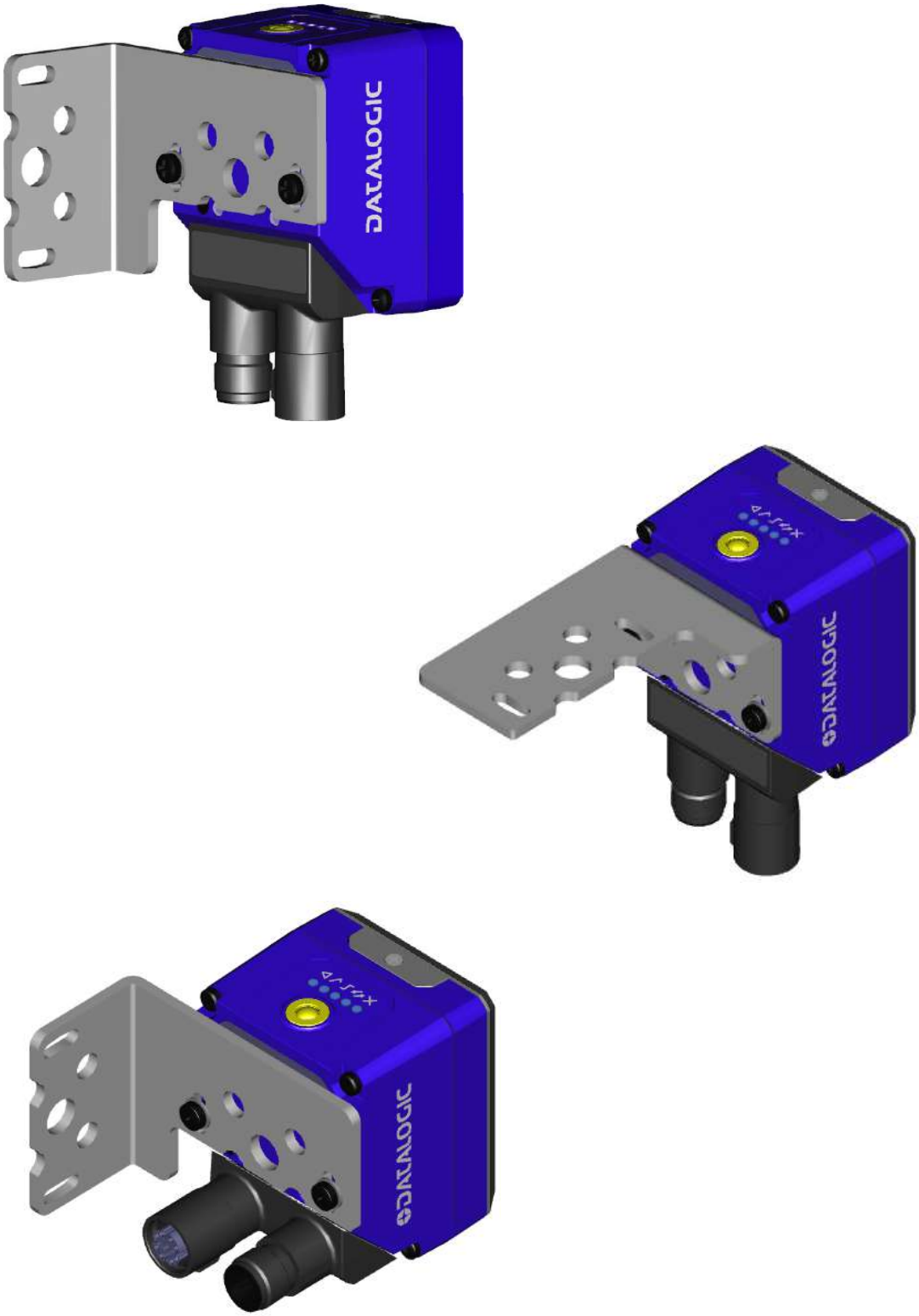

Figure 31 – Positioning with Mounting Bracket

Matrix 220 is able to decode code labels at a variety of angles; however significant angular distortion may degrade reading performance.

When mounting Matrix 220, take into consideration these **ideal** label position angles: **Pitch or Skew 10° to 20° and Tilt 0°**.

Note: Since Matrix 220 is omni-directional on the code plane, the Pitch and Skew angles have the same significance with respect to the code plane. However in some advanced code reading applications performance can be improved by modifying the Skew angle.

The **Pitch, Skew and Tilt** angles are represented in Figure 32. Follow the suggestions below for the best orientation:

Position the reader in order to avoid the direct reflection of the light emitted by the Matrix 220 reader; it is advised to **assure at least 10°** for the Skew angle.

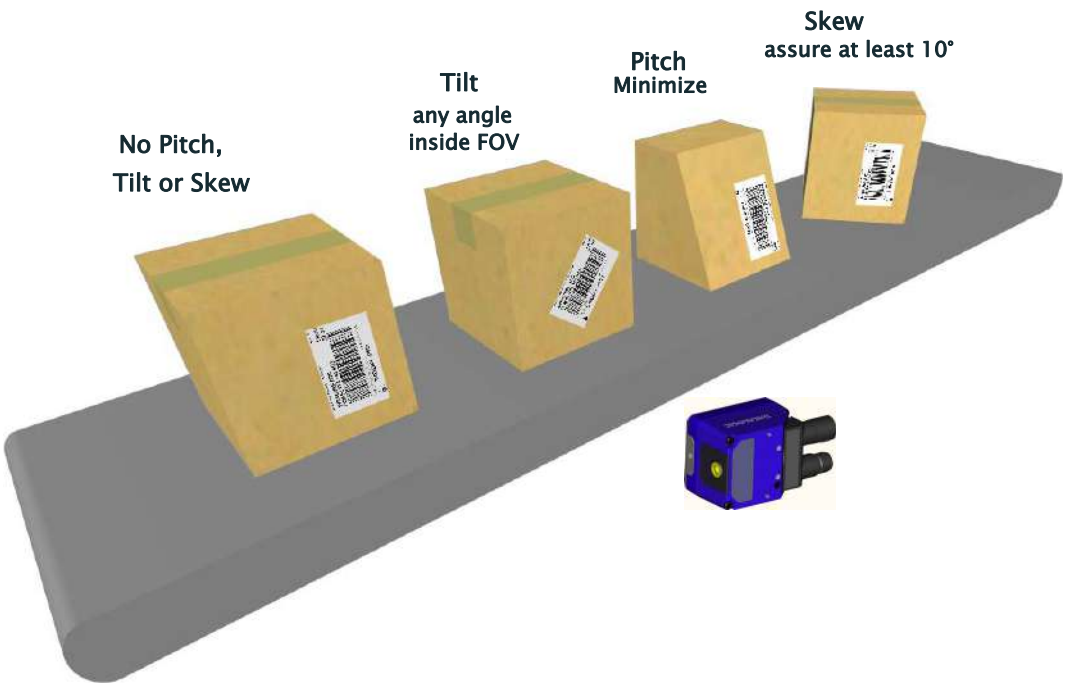

Figure 32 – Code Reading Orientation

In some cases, such as low contrast or low illumination, it can be useful to use a **Pitch or Skew** angle = 0°.

The **Tilt** angle is also represented in Figure 33. Matrix 220 can read labels with any tilt angle. Keep in mind however, that since linear barcodes are rectangular, the reader should be aligned to fit them into the horizontal FOV.

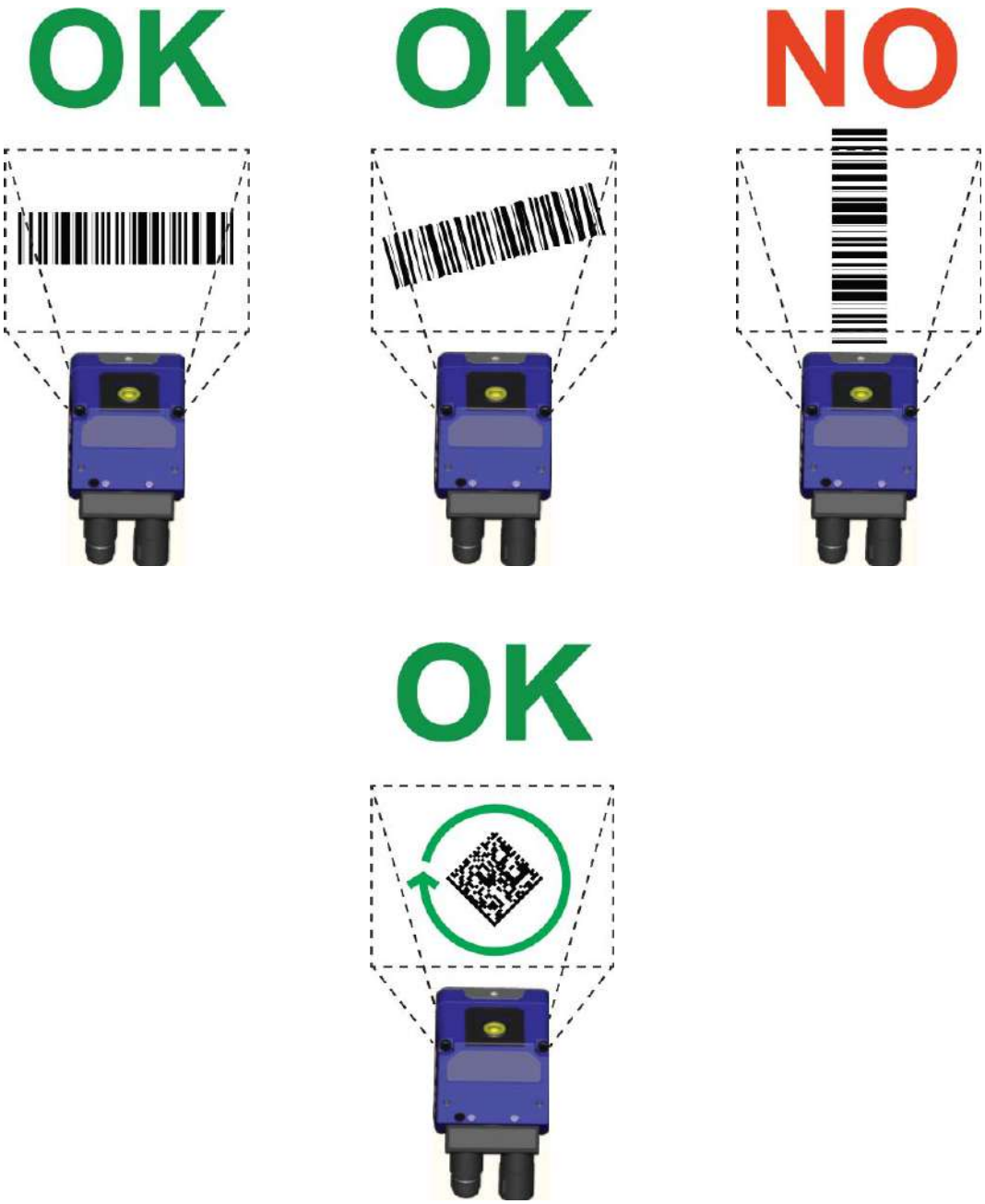

Figure 33 – Tilt Angle Considerations

See Chapter 6 for FOV vs. Reading Distance considerations.

Mounting Accessory Covers

To mount the Accessory ESD or YAG Cut filter covers, follow the instructions bellow.

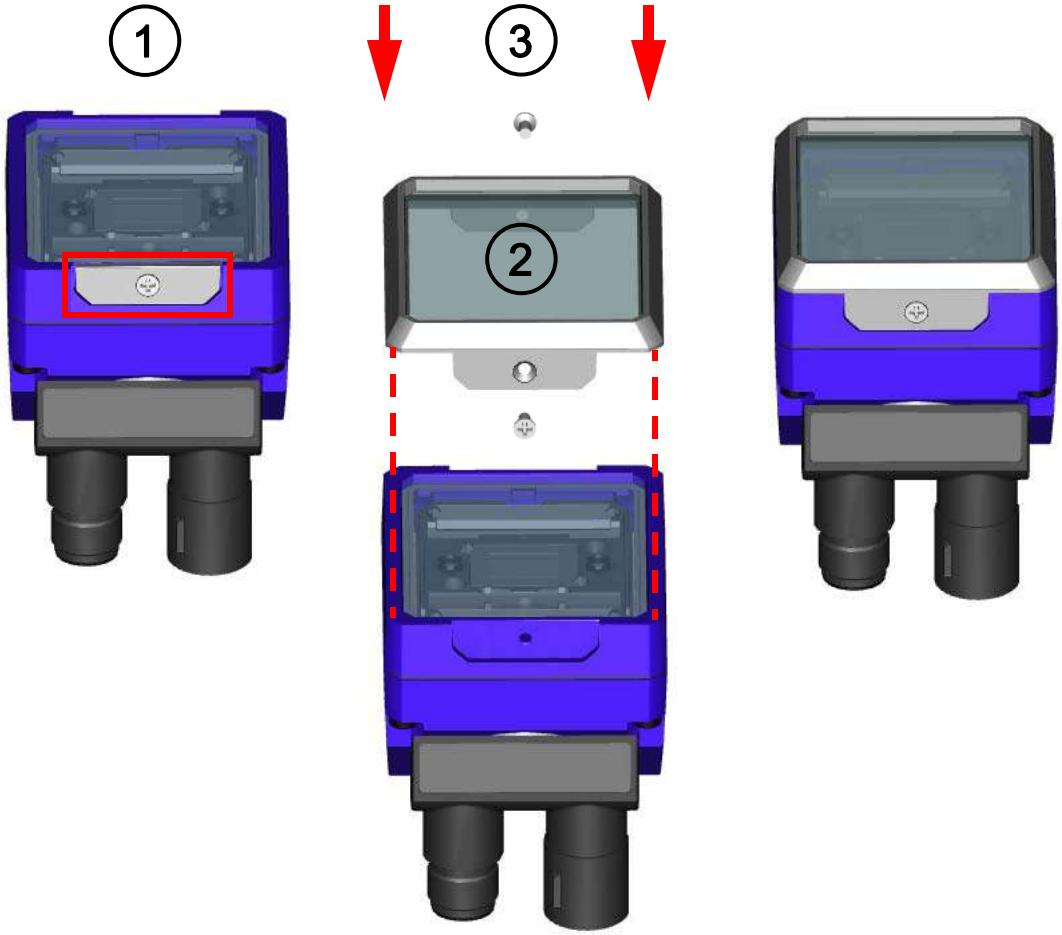

Figure 34 – Accessory Cover Mounting

1. Remove the cover plates and screws.
2. Make sure the window is clean of any dirt, dust or fingerprints. If necessary wipe it with a clean tissue.
3. Place the cover over the Matrix 220 reader and press down on the cover frame edges until the screw holes align.
   To avoid damage, do not press on the window.
4. Insert one of the screws; to avoid damage to the threads, turn it counter-clockwise a couple of turns until it aligns properly. Then turn it clockwise several turns until partially tightened.
5. Repeat step 3 and 4 for the second screw.
6. Tighten both screws to 25 cN m of torque.

NOTE

The ESD accessory covers are supplied with an adhesive label that can be applied onto the reader indicating that the reader is now ESD safe.

Mounting Flexible Cables

Matrix 220 Flexible Cables are used for Power and Ethernet connection to Datalogic Matrix 220 reader and are especially designed for linear and torsion moving applications, unsupported travel distances, and up to 10 m in gliding applications.

They offer the following features:

- oil resistant
- operating temperature: -15 to 70 °C
- PVC-free, halogen-free, flame retardant
- CE, RoHs-II, cURus, NFPA, EAC & TR (CTP)
- UL certification (Ethernet cable only)

The figures below give the overall dimensions of the cables and may be used for their installation on a Matrix 220 reader with connectors positioned at 0° and 90°.

NOTE

Configurations with Power cable (Figure 35 **and** Figure 36**) or Power + Ethernet cables (**Figure 39 **and** Figure 40**) are not supported by Power over Ethernet (PoE) models.**

PoE models only accept configuration with Ethernet cable (Figure 37 **and** Figure 38**).**

NOTE

Matrix 220 flexible cables must be clamped at a minimum distance of 245 mm from the Matrix reader, as shown in the figures below. Make sure that the Matrix reader and the cable clamping connectors are fixed to a rigid frame.

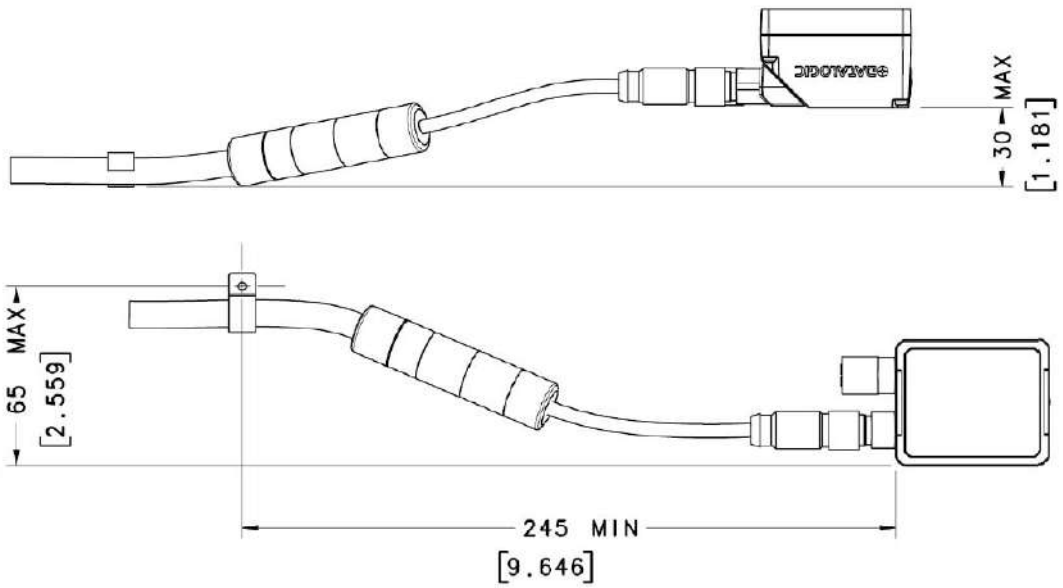

Figure 35 – Flexible power cable connected to Matrix reader with connector at 0°

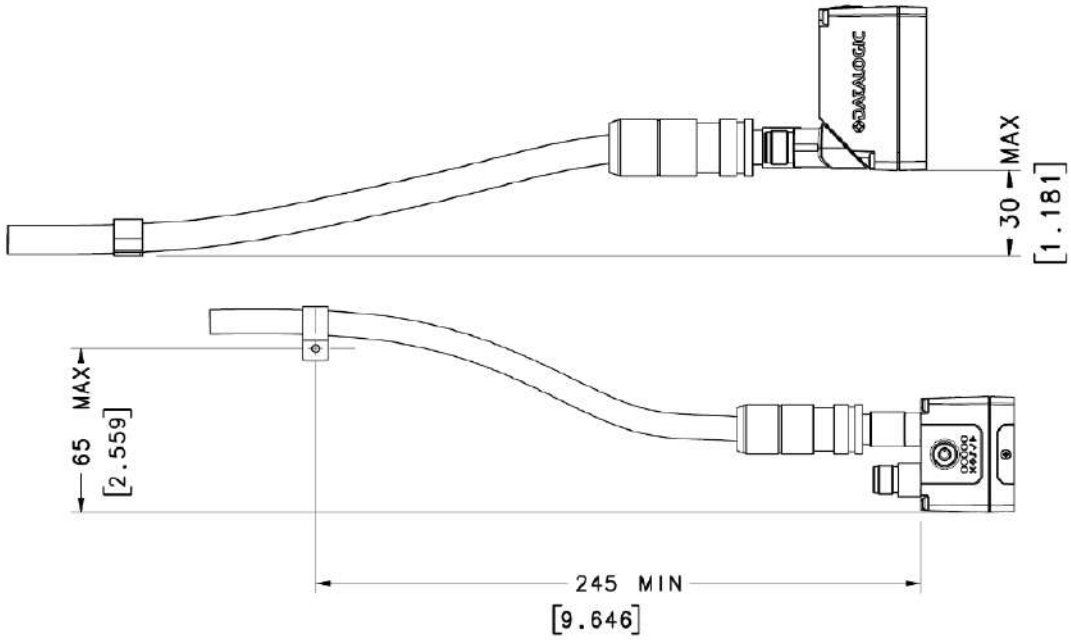

Figure 36 – Flexible power cable connected to Matrix reader with connector at 90°

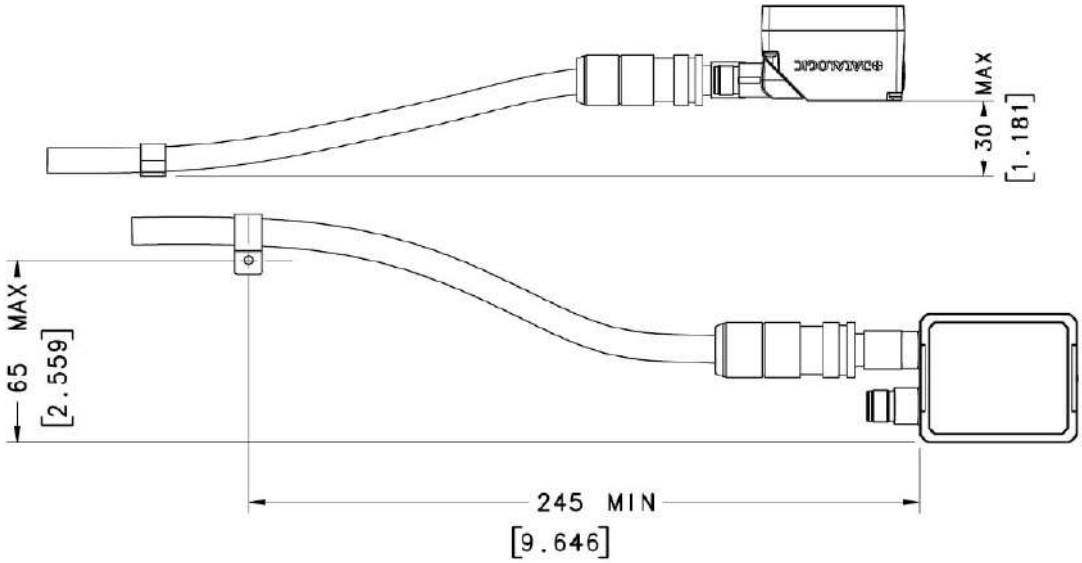

Figure 37 – Flexible Ethernet cable connected to Matrix reader with connector at 0°

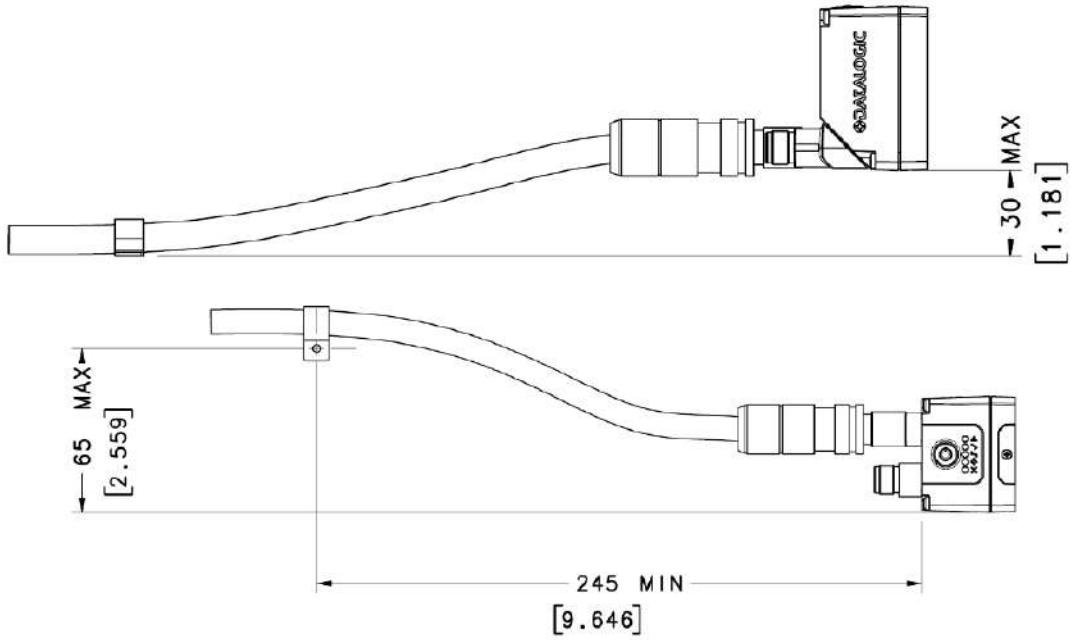

Figure 38 – Flexible Ethernet cable connected to Matrix reader with connector at 90°

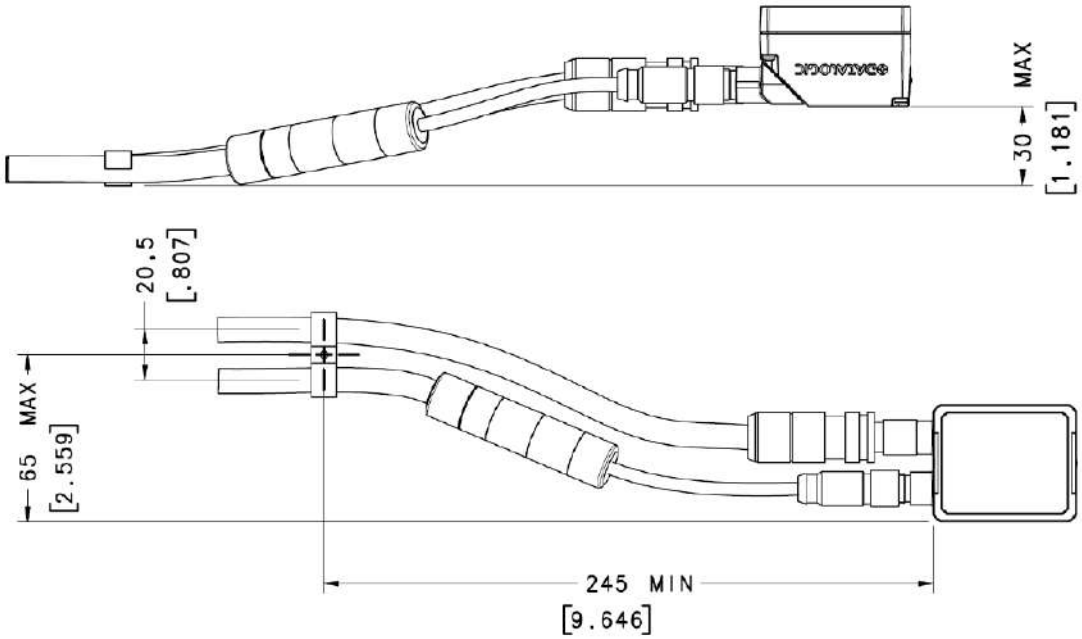

Figure 39 – Flexible Power + Ethernet cables connected to Matrix reader with connector at 0°

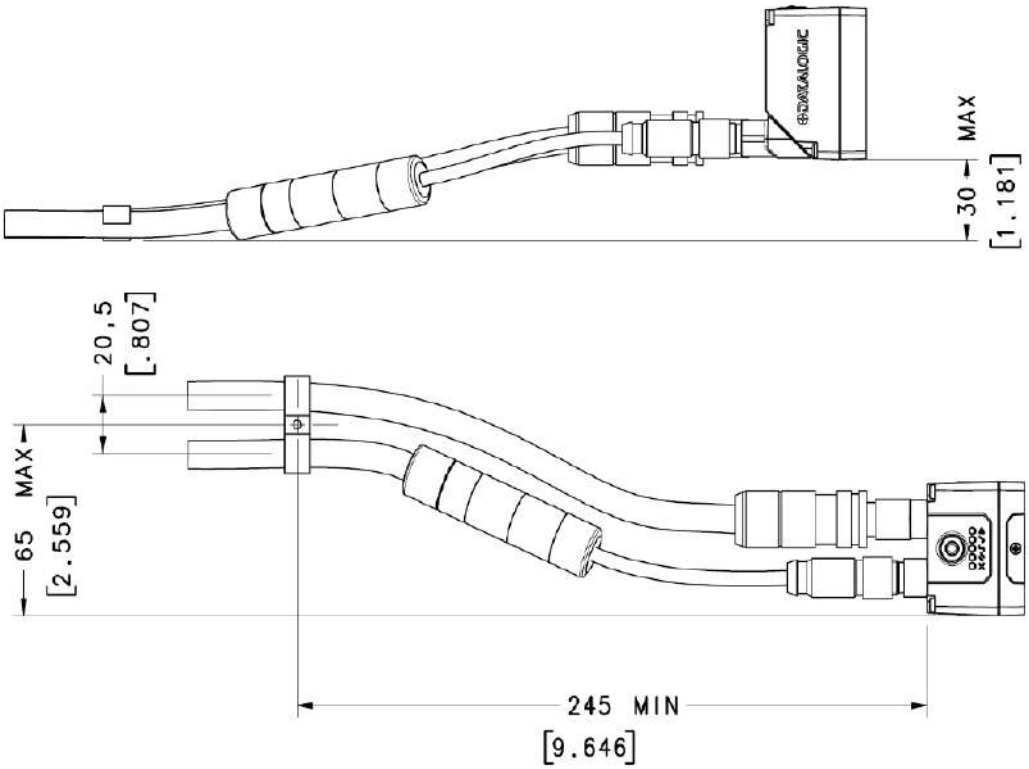

Figure 40 – Flexible Power + Ethernet cables connected to Matrix reader with connector at 90°

Flexible Cables Technical Data

Dynamic values for 3D e-chain	
Max. Speed	± 180 °/s
Max. Acceleration	60 °/s^2
Min. Binding Radius	105 mm
Cycles	5 million

Dynamic values for linear e-chain	
Max. Speed	10 m/s
Max. Acceleration	10 m/s^2
Min. Binding Radius	80 mm
Cycles	5 million

Power cable		
Functionality		**Pin**
VDC		VDC
GND		GND
I1	Polarity insensitive	I1A
		I1B
I2	Polarity insensitive	I2A
		I2B
O1		O1
O2		O2
SERIAL MAIN	RS232	RX
		TX
IDNET		ID+
		ID-
SHIELD		CONNECTOR CASE

NOTE

For more information on alternative connections, please refer to "Alternative Connections" on page 176.

Chapter 4
Electrical Connections

All Matrix 220 Standard Input Power models can be connected to a CBX connection box through one of the available **CAB-DSxx-S** accessory cables. These accessory cables terminate in an M12 17-pin connector on the Matrix 220 side and in a 25-pin male D-sub connector on the CBX side.

NOTE

All Matrix 220 Power over Ethernet (PoE) models have an additional COM and Trigger connector which can be connected through custom cables. See Appendix A **for direct wiring details.**

We recommend making system connections through one of the CBX connection boxes since they offer the advantages of easy connection, easy device replacement, opto-isolated outputs (Outputs 1 and 2), and filtered reference signals.

NOTE

If you require direct wiring to the reader the connections are the same as shown in this chapter with the exception of the digital Outputs. Direct wiring details are indicated in Appendix A.

CBX Connection Box Pinout

The table below gives the pinout of the CBX100/500 terminal block connectors. Use this pinout when the Matrix 220 reader is connected by means of the CBX100/500:

Group	Label	Description
Input Power	Vdc	Power Supply Input Voltage +
	GND	Power Supply Input Voltage -
	Earth	Protection Earth Ground
Inputs	+V	Power Source - External Trigger
	I1A	External Trigger A (polarity insensitive)
	I1B	External Trigger B (polarity insensitive)
	-V	Power Reference - External Trigger

Group	Label	Description
Inputs	+V	Power Source - Inputs
	I2A	Input 2 A (polarity insensitive)
	I2B	Input 2 B (polarity insensitive)
	-V	Power Reference - Inputs
Outputs	+V	Power Source - Outputs
	-V	Power Reference - Outputs
	O1+	Output 1 + opto-isolated and polarity sensitive
	O1-	Output 1 - opto-isolated and polarity sensitive
	O2+	Output 2 + opto-isolated and polarity sensitive
	O2-	Output 2 - opto-isolated and polarity sensitive
	O3A	Output 3 - opto-isolated (only available through CBX500)
Auxiliary Interface	TX	Transmit Data
	RX	Receive Data
	SGND	Auxiliary Interface Signal Ground
ID-NET	REF	Network Reference
	ID+	ID-NET network data +
	ID-	ID-NET network data -
	Shield	Network Cable Shield
Main Interface	RS232	RS422 Full Duplex
	TX	TX+
	RX	*RX+
	-	TX-
	-	*RX-
	SGND	SGND

* Do not leave floating, see "RS422 Full Duplex Interface" on page 71 for connection details.

NOTE

To avoid electromagnetic interference when the reader is connected to a CBX connection box, verify the jumper positions in the CBX as indicated in its Installation Manual.

Power Supply

Power requirements and conditions depend on the Matrix 220 model: Standard or PoE (Power over Ethernet).

NOTE

Each time the Matrix 220 is powered on, the electronic focus motor system does extra work for system checking and setup. It is recommended to limit power cycles to a few times per day.

Standard Models

For these models power can be supplied to the reader through the CBX100/500 spring clamp terminal pins as shown in Figure 41:

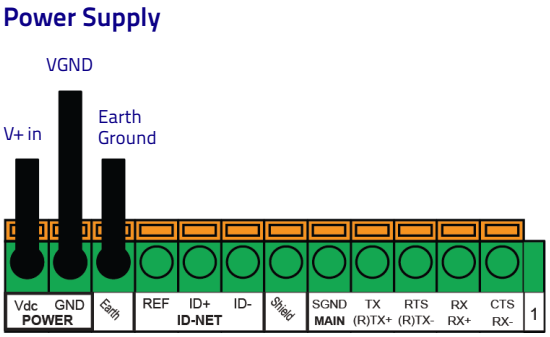

Figure 41 – Power Supply Connections

The power must be between 10 and 30 Vdc only.

It is recommended to connect the device CHASSIS to earth ground (Earth) by setting the appropriate jumper in the CBX connection box. See the CBX Installation Manual for details.

Power Over Ethernet (PoE) Models

The Ethernet pinout is as follows:

Pin	Name	Description
1	TX+	Transmit data +
2	TX-	Transmit data -
3	RX+	Receive data +
4	RX-	Receive data -
5	DC1-	DC power (-)
6	DC2-	DC power (-)
7	DC1+	DC power (+)
8	DC2+	DC power (+)

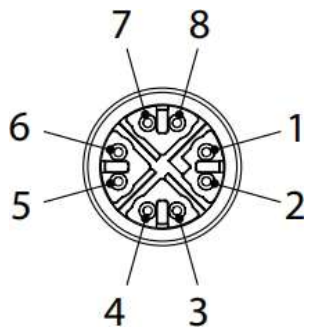

Figure 42 - M12 X-Coded Female Ethernet Network Connector

Power can be applied to any of the data pairs according to the IEEE 802.3af standard for Alternative A (Mid and Endspan) or Alternative B.

Main Serial Interface

CAUTION

Do not connect to the Main Interface spring clamp terminals if using Host Interface Modules (Fieldbus) with the CBX500.

The signals relative to the following serial interface types are available on the CBX spring clamp terminal blocks.

The main serial interface type and its parameters (baud rate, data bits, etc.) can be defined by the user via DL.CODE software. For more details refer to the Help On Line page of the Reading Phase step (Channels) in DL.CODE.

Details regarding the connections and use of the interfaces are given in the next paragraphs.

RS232 Interface

The RS232 interface is generally used for Point-to-Point connections. When it is connected to the host computer it allows transmission of code data.

The following pins are used for RS232 interface connection:

CBX100/500	Description
TX	Transmit Data
RX	Receive Data
SGND	Signal Ground

It is always advisable to use shielded cables. The overall maximum cable length must be less than 15 m (49.2 ft).

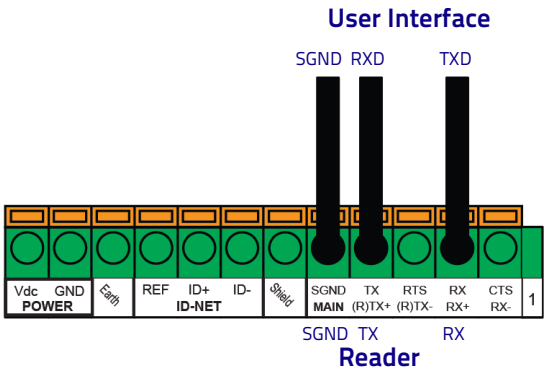

Figure 43 – RS232 Main Interface Connections

RS422 Full Duplex Interface

The RS422 full-duplex (5 wires + shield) interface is used for non-polled communication protocols in point-to-point connections over longer distances (max 1200 m / 3940 ft) than those acceptable for RS232 communications or in electrically noisy environments.

The CBX pinout follows:

CBX100/500	Description
TX+	RS422 Transmit Data +
RX+	RS422 Receive Data +
TX-	RS422 Transmit Data -
RX-	RS422 Receive Data -
SGND	Signal Ground

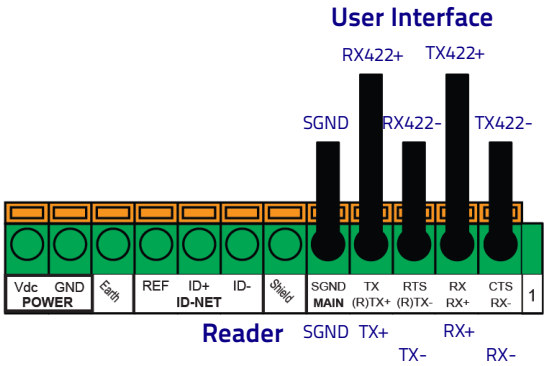

Figure 44 – RS422 Full Duplex Connections

NOTE

For applications that do not use RS422 transmission to the reader (terminal block RX+ and RX- signals), do not leave these lines floating but connect them to SGND as shown below.

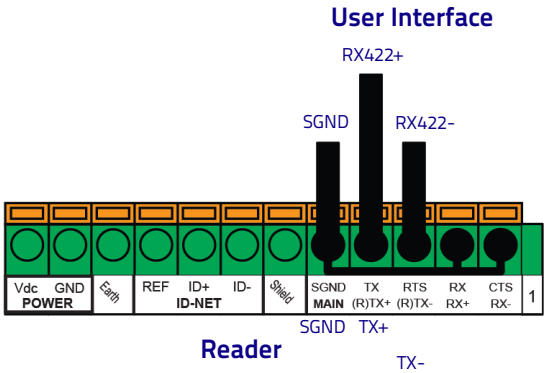

Figure 45 – RS422 Full Duplex Connections Using Only TX Signals to Host

ID-NET Interface

CBX100/500	Description
Shield	Network Cable Shield
ID+	ID-NET Network Data +
ID-	ID-NET Network Data -
REF	Network Reference

ID-NET Cables

The following instructions are referred to Figure 47, Figure 48 and Figure 49.

- The general cable type specifications are: CAT5 twisted pair + additional CAT5 twisted pair, shielded cable AWG 24 (or AWG 22) stranded flexible.

  We recommend using DeviceNet cables (drop or trunk type) to the following reference standards:

  AN50325 – IEC 62026

  UL STYLE 2502 80°C 30V
- Cable Shield MUST be connected to earth ground ONLY at the Master.
- NEVER use ID-NET cable shield as common reference.
- The ID-NET max cable length depends on the baudrate used, (see the Baudrate Table below).
- For Common Power Connections use only 2 wires (ID+ and ID-).
  - DC Voltage Power cable (Vdc – GND) should be handled as a signal cable (i.e. do not put it together with AC cable):
  - Wire dimensioning must be checked in order to avoid voltage drops greater than 0.8 Volts.
  - Cable should lie down as near as possible to the ID-NET cable (avoiding wide loops between them).
- Reader's chassis may be connected to earth.
- Network inside the same building.

Baudrate Table				
Baudrate	125 kbps	250 kbps	**500 kbps**	1 Mbps
Cable Length	1200 m	900 m	**700 m**	*

* Application dependent, contact your Datalogic representative for details.

NOTE

The default ID-NET baudrate is 500 kbps. Lower ID-NET baudrates allow longer cable lengths.

ID-NET Response Time

The following figure shows the response time of the ID-NET network. This time is defined as the period between the Trigger activation and the beginning of data transmission to the Host.

Figure 46 – ID-NET Response Time

Conditions

- ID-NET M/S Synchronized layout
- message length = 50 bytes per node

ID-NET Network Termination

The network must be properly terminated in the first and last reader of the network. This is done by setting the ID-NET Termination Resistance Switch in the CBX100/500 to ON.

ID-NET Connection Diagrams

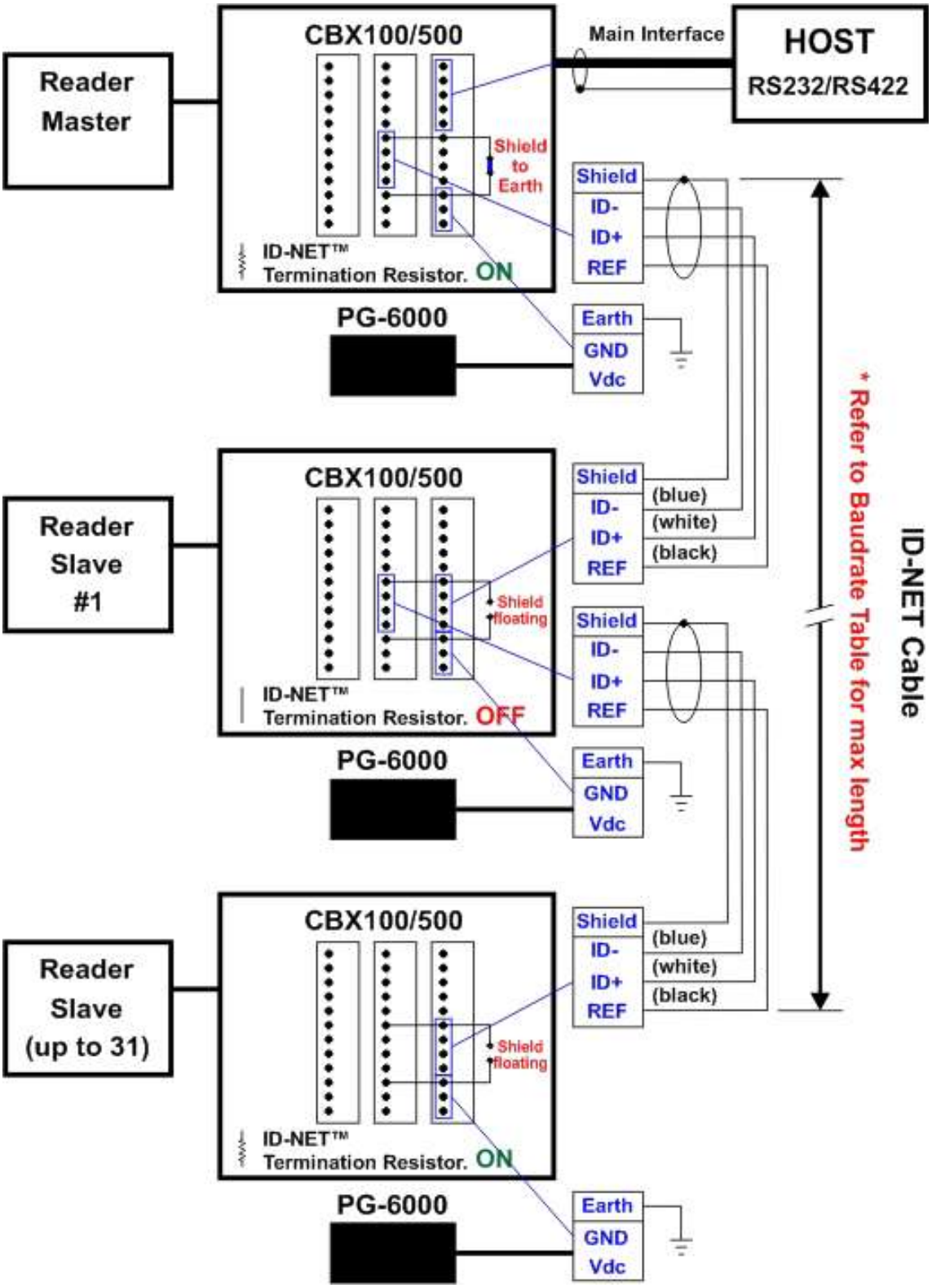

Figure 47 – ID-NET Network Connections with isolated power blocks

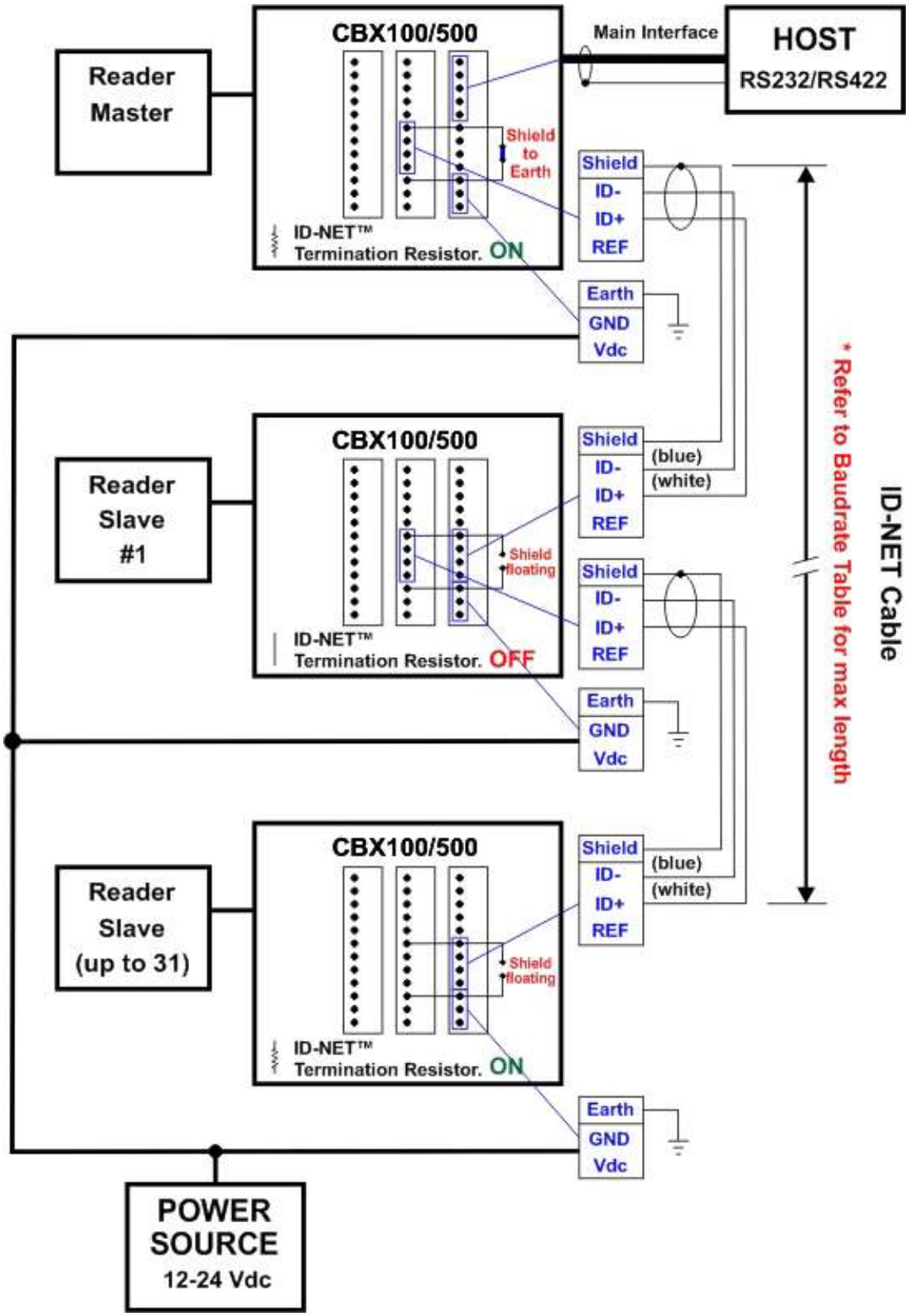

Figure 48 – ID–NET Network Connections with Common Power Branch Network

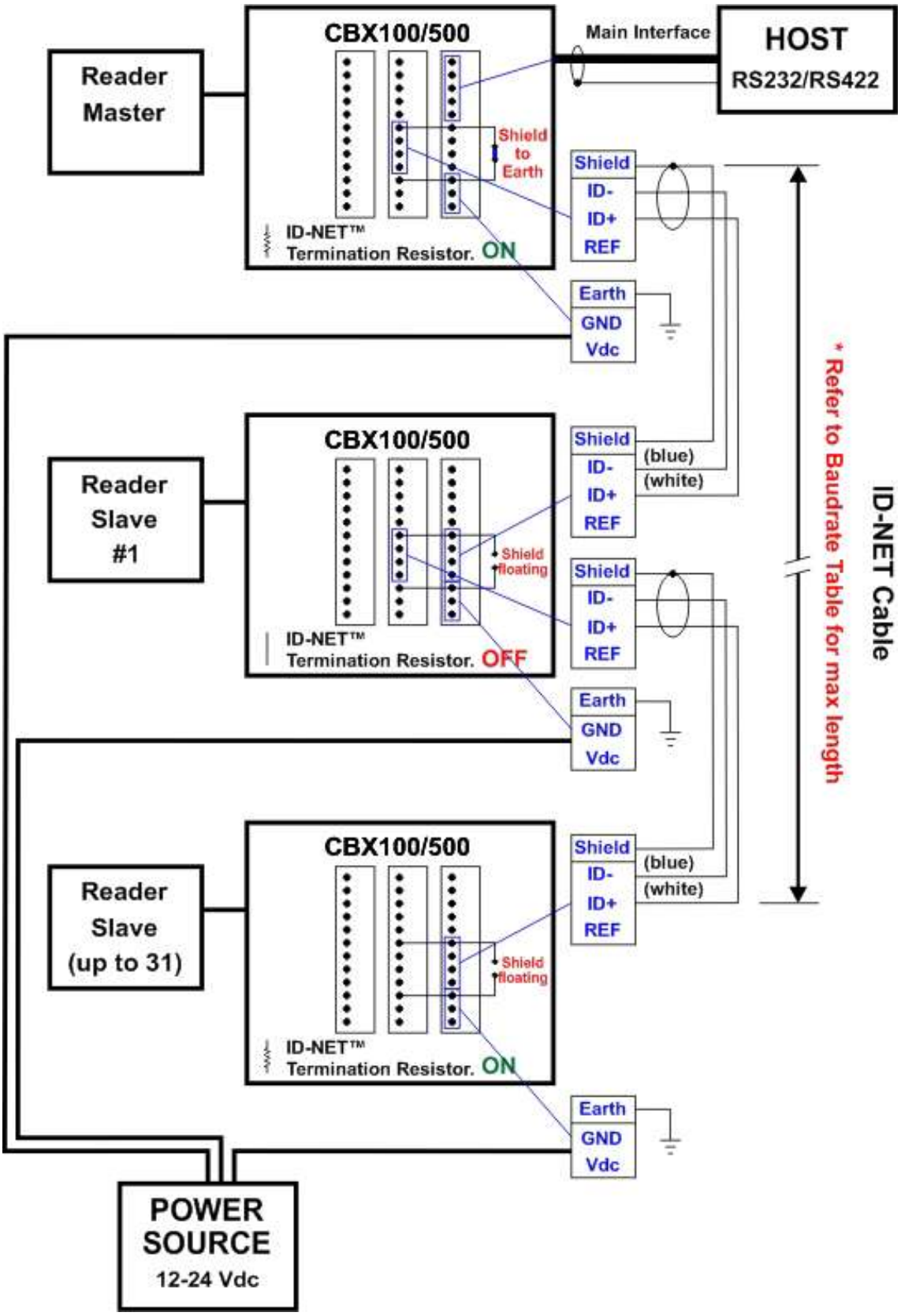

Figure 49 – ID–NET Network Connections with Common Power Star Network

Auxiliary RS232 Interface

The RS232 auxiliary interface is available for Point-to-Point connections. When it is connected to the host computer it allows transmission of code data.

The parameters relative to the aux interface (baud rate, data bits, etc.) can be defined through the Reading Phase step (Channels) in DL.CODE.

The 9-pin female Auxiliary Interface connector inside the CBX is the preferred connector for temporary communication monitoring.

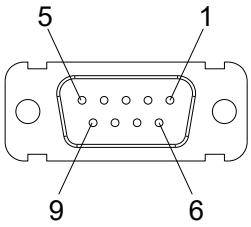

Figure 50 – 9-pin female connector

If permanent system wiring is required, the following pins are used to connect the RS232 auxiliary interface:

CBX100/500	Description
TX	Auxiliary Interface Transmit Data
RX	Auxiliary Interface Receive Data
SGND	Auxiliary Interface Reference

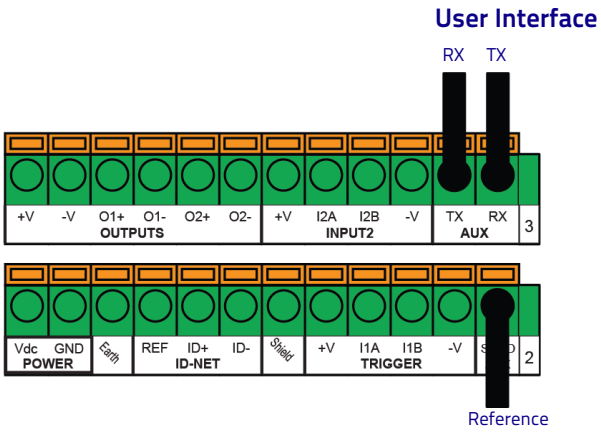

NOTE

Do not connect the Aux Interface to the CBX spring clamp connectors and the 9-pin connector simultaneously.

Inputs

There are two optocoupled polarity insensitive inputs available on the reader: Input 1 (External Trigger) and Input 2, a generic input:

The External Trigger can be used in One Shot Mode or in Phase Mode. Its main functions are:

- acquisition trigger in One Shot Mode
- reading phase-ON/reading phase-OFF command in Phase Mode

The main functions of the general purpose Input 2 are:

- second external trigger in Phase Mode
- match code storage command when the Match Code option is enabled

The electrical features of both inputs are:

V_{AB} = 30 Vdc max.
I_{IN} = 10 mA (reader) + 12 mA (CBX) max.

The active state of these inputs are selected in software.

An anti-disturbance filter, by default, is implemented in software on both inputs. The value can be changed through the software parameter Debounce Filter. See the Help On Line page of the Reading Phase step (Inputs) in DL.CODE for further details on these parameters.

These inputs are optocoupled and can be driven by both NPN and PNP type commands.

NOTE

Polarity insensitive inputs assure full functionality even if pins A and B are exchanged.

The connections are indicated in the following diagrams:

CBX100/500	Description
+V	Power Source - External Trigger
I1A	External Trigger A (polarity insensitive)
I1B	External Trigger B (polarity insensitive)
-V	Power Reference - External Trigger

The yellow Trigger LED (Figure 8, 5) is on when the active state of the External Trigger corresponds to ON.

External Trigger Input Connections Using Matrix 220 Power

CAUTION

Power from the Vdc/GND spring clamps is available directly to the Input Device on the +V/-V spring clamps, and does not pass through the Power Switch (ON/OFF) inside the CBX. Disconnect the power supply when working inside the CBX.

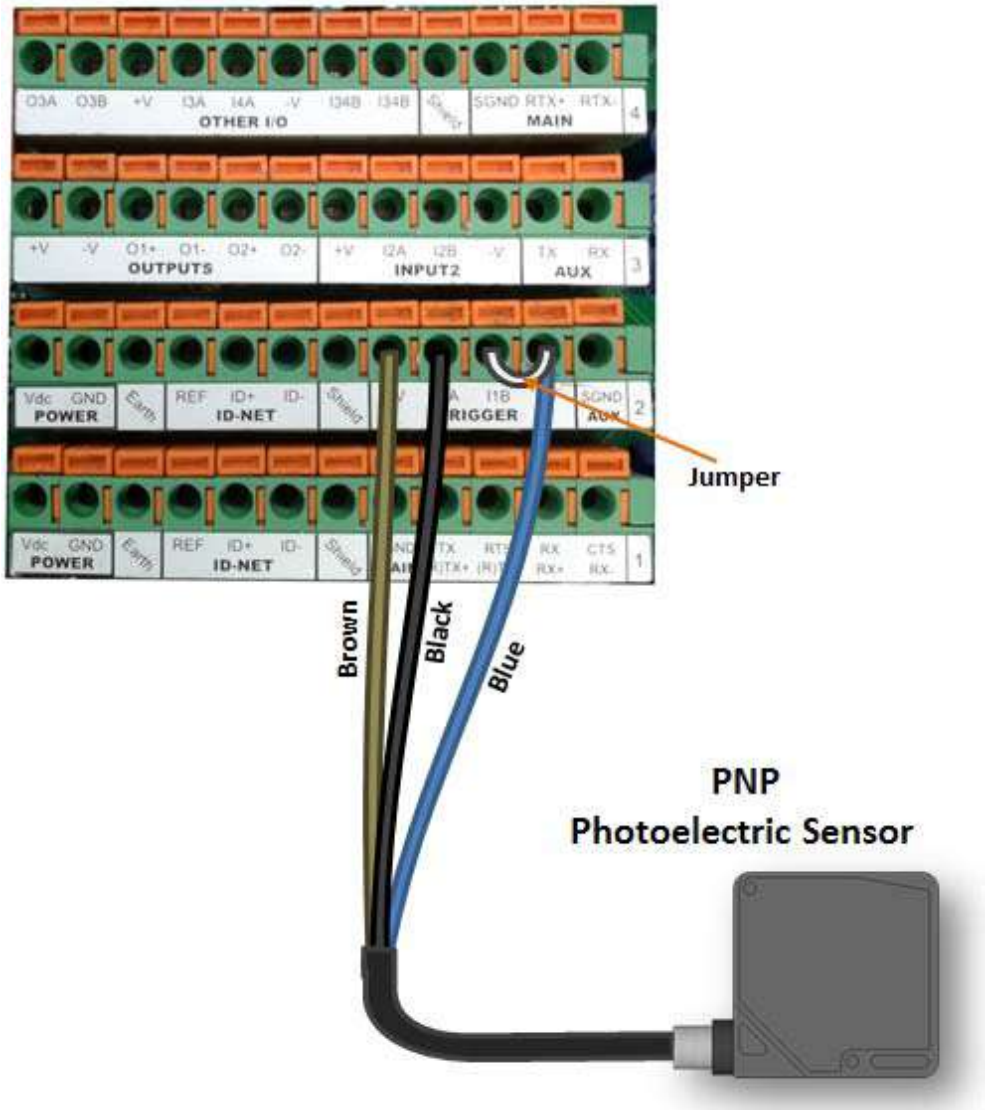

Figure 51 – PNP External Trigger Using Matrix 220 Power

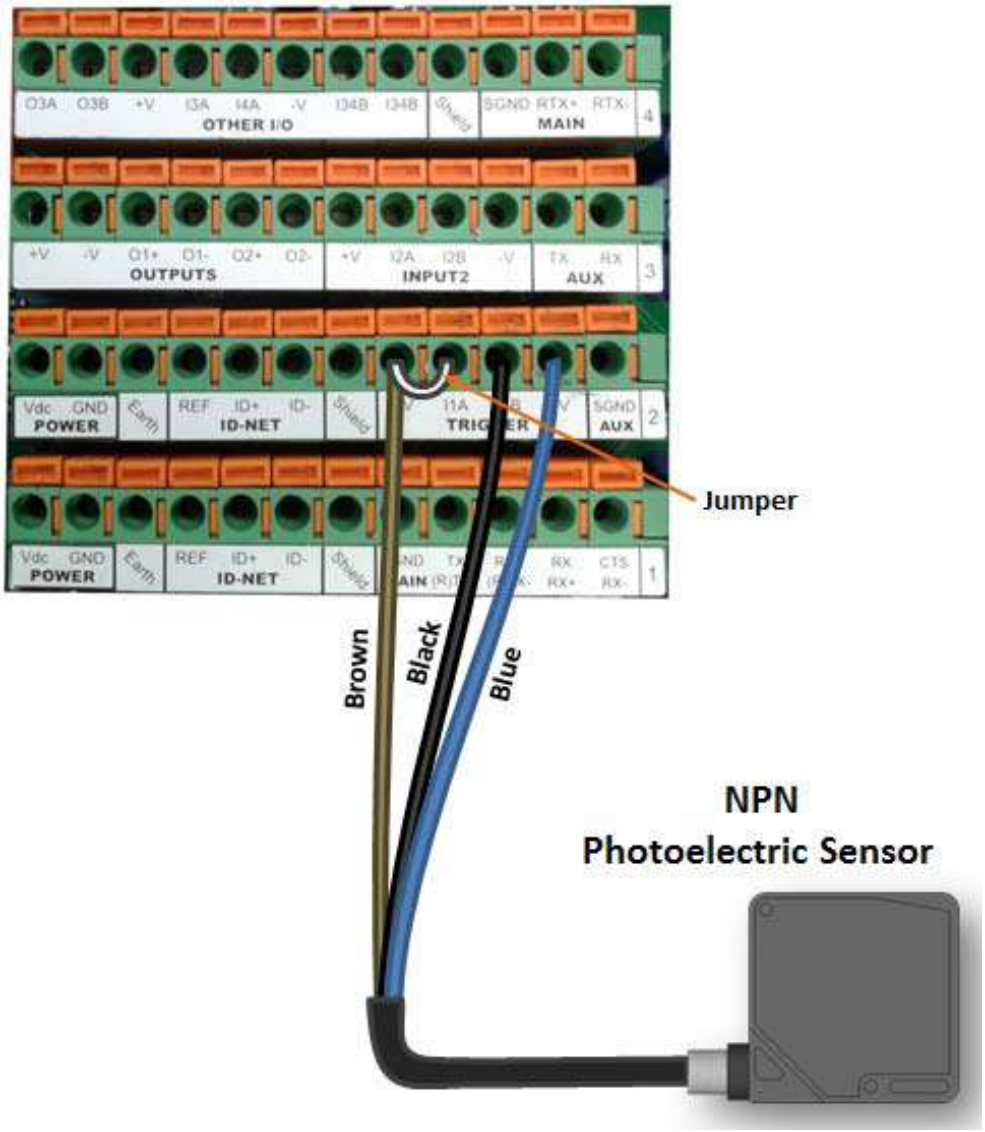

Figure 52 – NPN External Trigger Using Matrix 220 Power

External Trigger Input Connections Using External Power

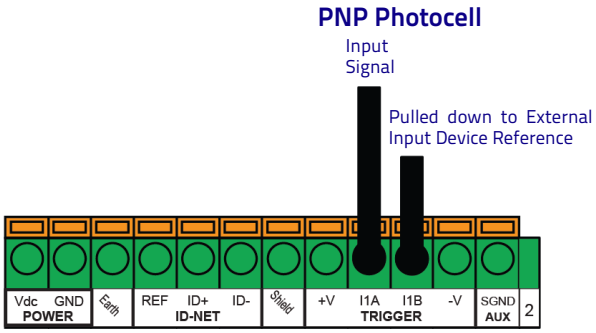

Figure 53 – PNP External Trigger Using External Power

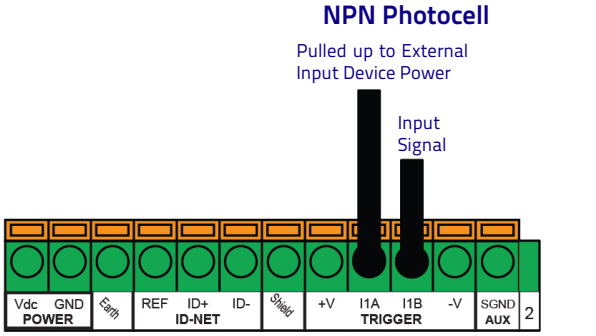

Figure 54 – NPN External Trigger Using External Power

CBX100/500	Description
+V	Power Source - External Trigger
I2A	Input 2 A (polarity insensitive)
I2B	Input 2 B (polarity insensitive)
-V	Power Reference - External Trigger

Input 2 Connections Using Matrix 220 Power

CAUTION

Power from the Vdc/GND spring clamps is available directly to the Input Device on the +V/-V spring clamps, and does not pass through the Power Switch (ON/OFF) inside the CBX. Disconnect the power supply when working inside the CBX.

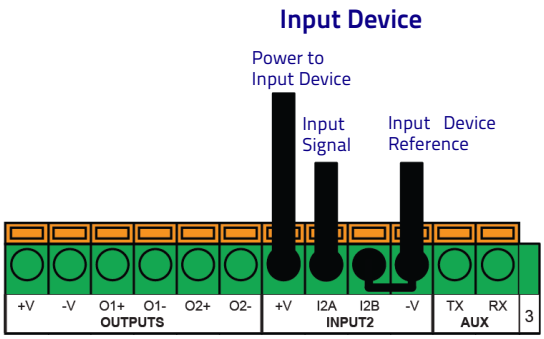

Figure 55 – PNP Input 2 Using Matrix 220 Power

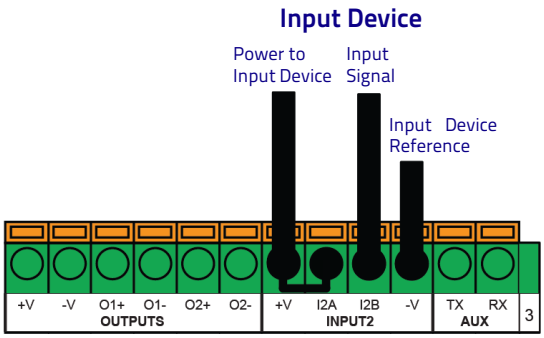

Figure 56 – NPN Input 2 Using Matrix 220 Power

Input 2 Connections Using External Power

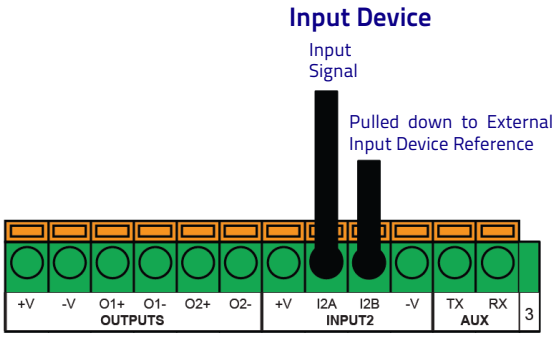

Figure 57 – PNP Input 2 Using External Power

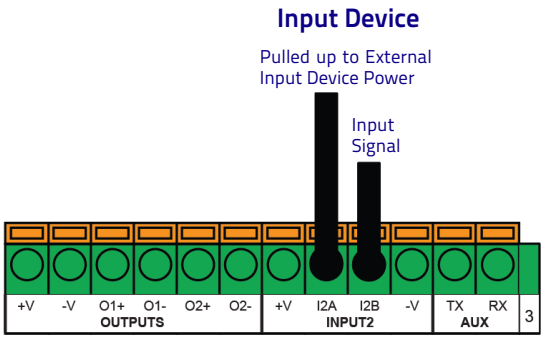

Figure 58 – NPN Input 2 Using External Power

Input 3 Connections (CBX500 Only)

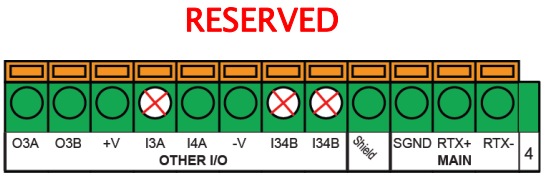

Figure 59 – Input 3 Using External Power

CAUTION

Do not connect to I3A or I34B signals, they are reserved.

Outputs

CAUTION

When Outputs 1 and 2 are connected through the CBX connection box, they become opto-isolated and polarity sensitive and acquire the electrical characteristics listed below. To function correctly, they require setting the Output Line Type configuration parameters to NPN for the respective output. The hardware connection to the CBX can be either NPN or PNP.

Three general purpose outputs are available and their meaning can be defined by the user. They are typically used either to signal the data collection result or to control an external lighting system.

CBX100/500	Description
+V	Power Source - Outputs
O1+	Output 1 + opto-isolated and polarity sensitive
O1-	Output 1 - opto-isolated and polarity sensitive
O2+	Output 2 + opto-isolated and polarity sensitive
O2-	Output 2 - opto-isolated and polarity sensitive
O3A	Output 3 non opto-isolated (only available on CBX500)
-V	Power Reference - Outputs

The electrical features of the outputs are the following:

Outputs 1 and 2	Output 3
V_{CE} = 30 Vdc max.	Reverse-Polarity and Short-Circuit Protected
I_{CE} = 40 mA continuous max.; 130 mA pulsed max.	V_{OUT} (I_{LOAD} = 0 mA) max = 30 Vdc
$V_{CE\ saturation}$ = 1 Vdc max. @ 10 mA	V_{OUT} (I_{LOAD} = 100 mA) max = 3 Vdc
P_D = 90 mW Max. @ 50 °C ambient temp.	I_{LOAD} max = 100 mA

By default, Output 1 is associated with the No Read event, which activates when the code(s) signaled by the external trigger are not decoded, and Output 2 is associated with the Good Read event, which activates when all the selected codes are correctly decoded.

The output signals are fully programmable being determined by the configured Activation/Deactivation events, Deactivation Timeout or a combination of the two. Refer to the DL.CODE parameters Help On Line for further details.

Output 1 and 2 Connections Using Matrix 220 Power

CAUTION

Power from the Vdc/GND spring clamps is available directly to the Output Device on the +V/-V spring clamps, and does not pass through the Power Switch (ON/OFF) inside the CBX. Disconnect the power supply when working inside the CBX.

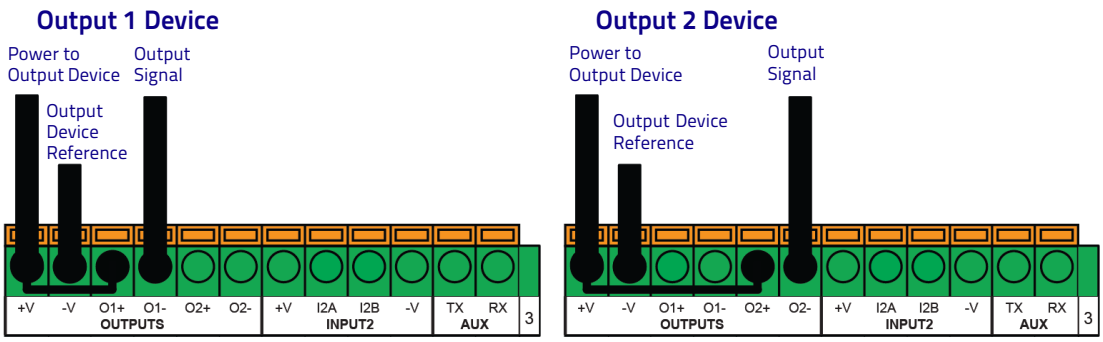

Figure 60 – PNP/Open Emitter Output Using Matrix 220 Power

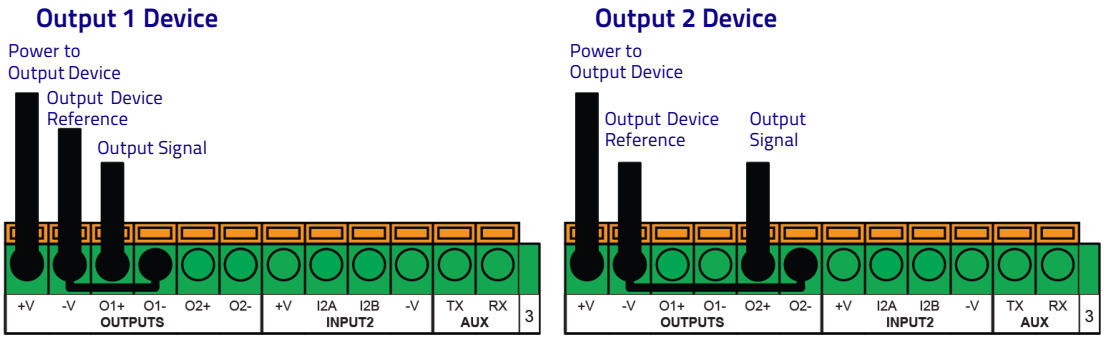

Figure 61 – NPN/Open Collector Output Using Matrix 220 Power

Output 1 and 2 Connections Using External Power

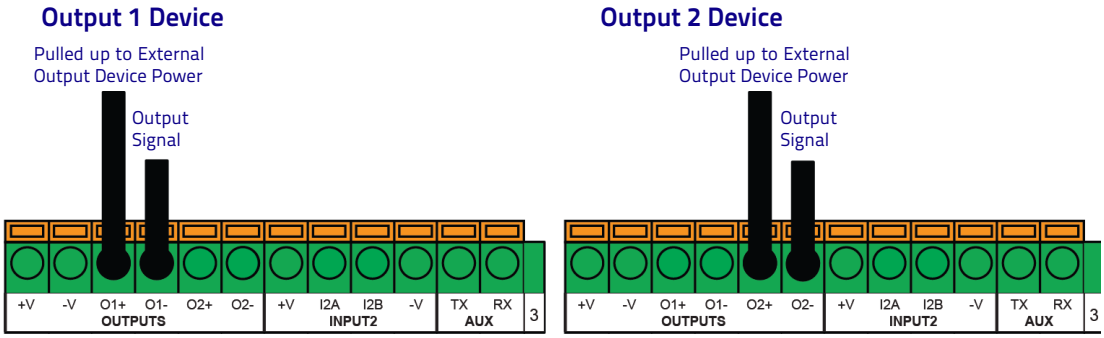

Figure 62 – PNP/Open Emitter Output Using External Power

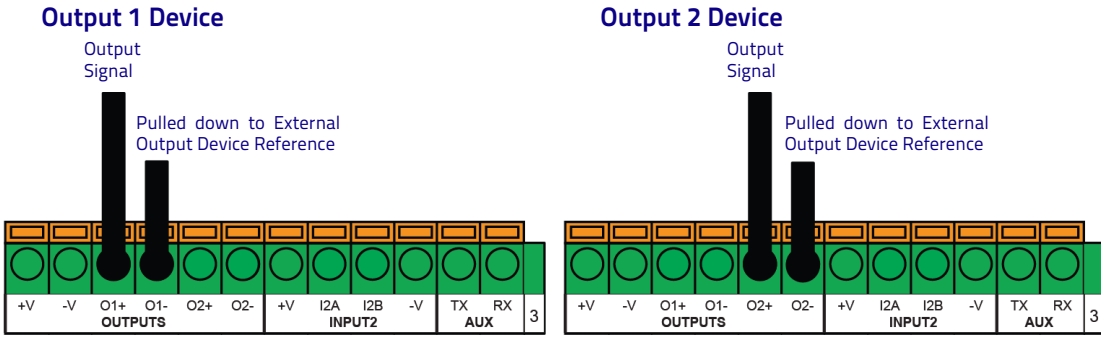

Figure 63 – NPN/Open Collector Output Using External Power

Output 3 is **not opto-isolated** but can be assigned to the same events. By default it is not assigned to any event. The CBX500 must be used to connect this output.

NOTE

For this output, set the Line Type configuration parameter according to the hardware connection to the CBX: NPN, PNP or Push-Pull.

Output 3 Connections Using Matrix 220 Power (CBX500 Only)

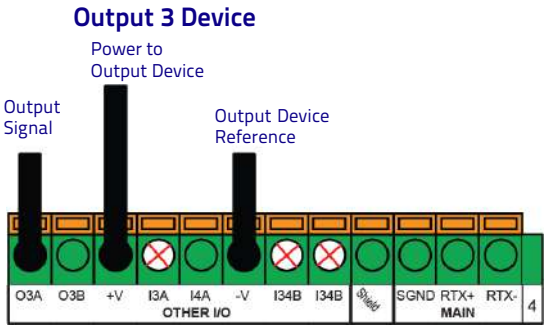

Figure 64 – Output 3 Using Matrix 220 Power

Output 3 Connections Using External Power (CBX500 Only)

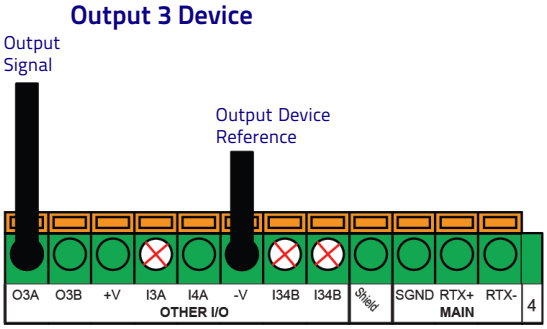

Figure 65 – Output 3 Using External Power

CAUTION

Do not connect to I3A or I34B signals, they are reserved.

On-Board Ethernet Interface

The on-board Ethernet Interface can be used for TCP/IP communication with a remote or local host computer by connecting the reader to either a LAN or directly to a host PC. There is no need to use a crossover adapter since Matrix 220 incorporates an auto-cross function.

A **CAB-ETH-X-M0x** cable can be used to connect to a LAN.

On the Matrix 220 on-board Ethernet interface the following communication channels are available:

- TCP Client
- TCP Server
- UDP Channel
- FTP Client

The following Fieldbus protocols are also available over the on-board Ethernet interface:

- EtherNet/IP
- PROFINET IO
- Modbus TCP Client

For further details refer to the Help On Line page of the Reading Phase step (Channels) and (Fieldbuses) in DL.CODE.

The following IoT protocol is also available over the on-board Ethernet interface:

- OPC UA

For further details, refer to “OPC UA protocol” on page 88.

User Interface - Serial Host

The following table contains the pinout for standard RS232 PC Host interface. For other user interface types please refer to their own manual.

RS232 PC-side Connections			
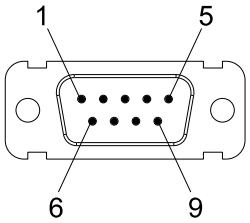 9-pin male connector		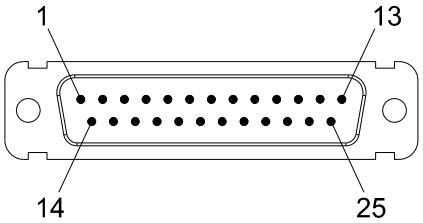 25-pin male connector	
Pin	**Name**	**Pin**	**Name**
2	RX	3	RX
3	TX	2	TX
5	GND	7	GND

OPC UA protocol

OPC Unified Architecture is a platform-independent standard that enables different kinds of systems and devices to communicate by sending request and response messages between Clients and Servers over various types of networks. It supports secure communication that assures the identity of OPC UA Applications and resists attacks.

Being platform-independent means that it functions on any hardware platforms (traditional PC hardware, cloud-based servers, PLCs, etc.) and any operating systems (Microsoft Windows, Apple OS X, Android, or any distribution of Linux, etc.). Furthermore, OPC UA offers the necessary infrastructure for interoperability across the enterprise, from machine-to-machine, machine-to-enterprise and everything in between.

OPC UA Companion Specifications

OPC UA specifies base information models that define commonly used objects including both real-time and historical data variables and alarms.

Based on these, new information models for specific industries can be created. The specifications of these models are called Companion Specifications. A number of Companion Specifications have already been created. Datalogic implements the OPC UA for AutoID Specification and the Device Information Model Specification. For more information on the Companion Specifications, visit the OPC Foundation website.

Available commands (methods)

A complete description of the commands, or methods, is provided in the AutoID Companion Specification. The commands are also described in the OPC UA Technical Note (download it from Datalogic website).

The Matrix 220 reader can perform the ScanStart and ScanStop methods in OPC UA environment:

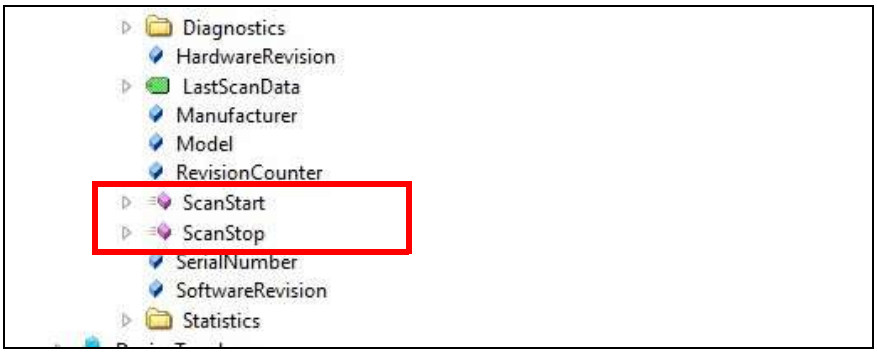

Figure 66 – OPC UA available methods on Matrix 220

Compatible OPC UA Clients

The Matrix 220 reader is compatible with all OPC UA Clients working in accordance with the AutoID Companion Specification. For example, the following OPC UA Clients can be used:

- UAExpert – Unified Automation
- dataFeed OPC UA Client – Softing

A specific OPC UA Client can be programmed with the OPC UA Stack provided by the OPC Foundation. It is also possible to use the OPC UA SDKs of other manufacturers.

OPC UA on DL.CODE

The OPC UA server is disabled on DL.CODE by default. To enable it, go to Device>Settings>Settings>OPC-UA Settings.

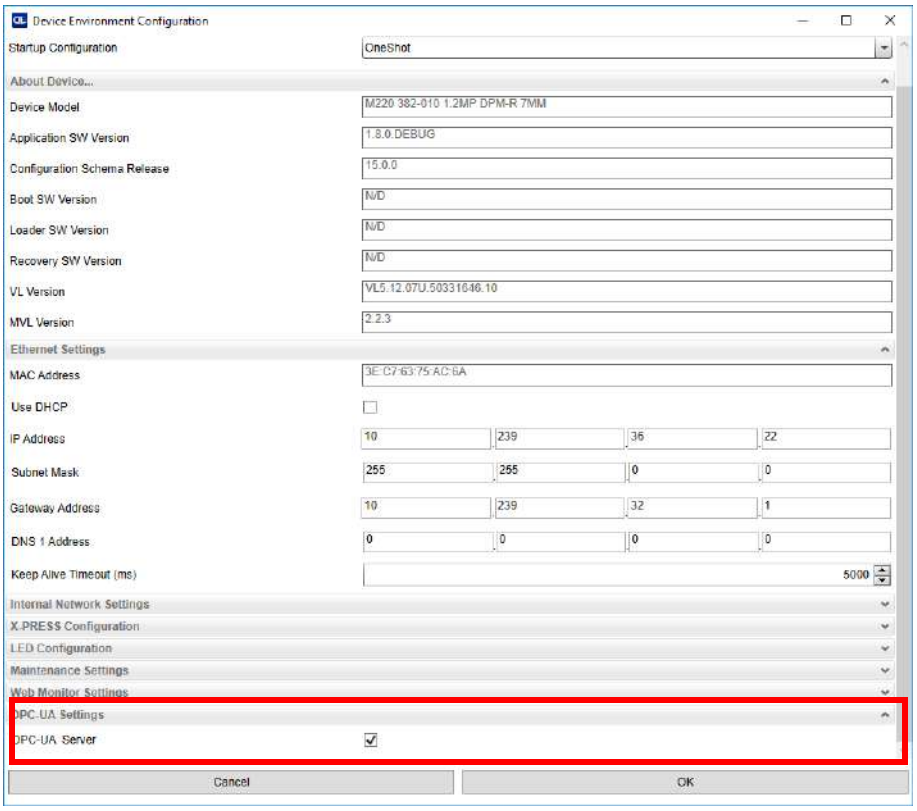

Figure 67 – Enabling OPC UA Server on DL.CODE

The user can also set a username and a password to access the OPC UA device. To enable protection, go to Device>Settings>Security Settings>OPC-UA Settings.

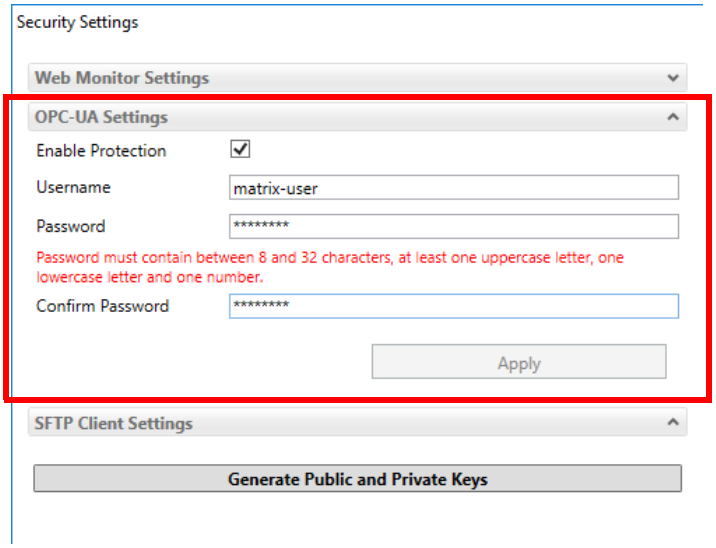

Figure 68 – OPC UA security settings

For more information on OPC UA, download the OPC UA Technical Note from Datalogic website.

Chapter 5
Typical Layouts

The following typical layouts refer to system hardware configurations. However, they also require the correct setup of the software configuration parameters. Dotted lines in the figures refer to optional hardware configurations within the particular layout.

NOTE

All software configurations are made through DL.CODE which connects to the reader through the on-board Ethernet interface.

NOTE

DL.CODE now supports several different multi device configuration types using the PASS-THROUGH configuration. In particular this feature allows MULTIDATA ID-NET network configurations to be made. Master/Slave SYNCHRONIZED ID-NET network configurations are also configurable as before.

NOTE

The Master/Slave Role is only significant for the Internal ID-NET Network. If your layout doesn't use the ID-NET network then the device's Role is not significant and can be ignored.

Ethernet Connection

The Ethernet connection is possible in two different layouts.

In a Point-to-Point layout the reader is connected to a local host by using a CAB-ETH-X-M0x cable. There is no need to use a crossover adapter since Matrix 220 incorporates an autocross function.

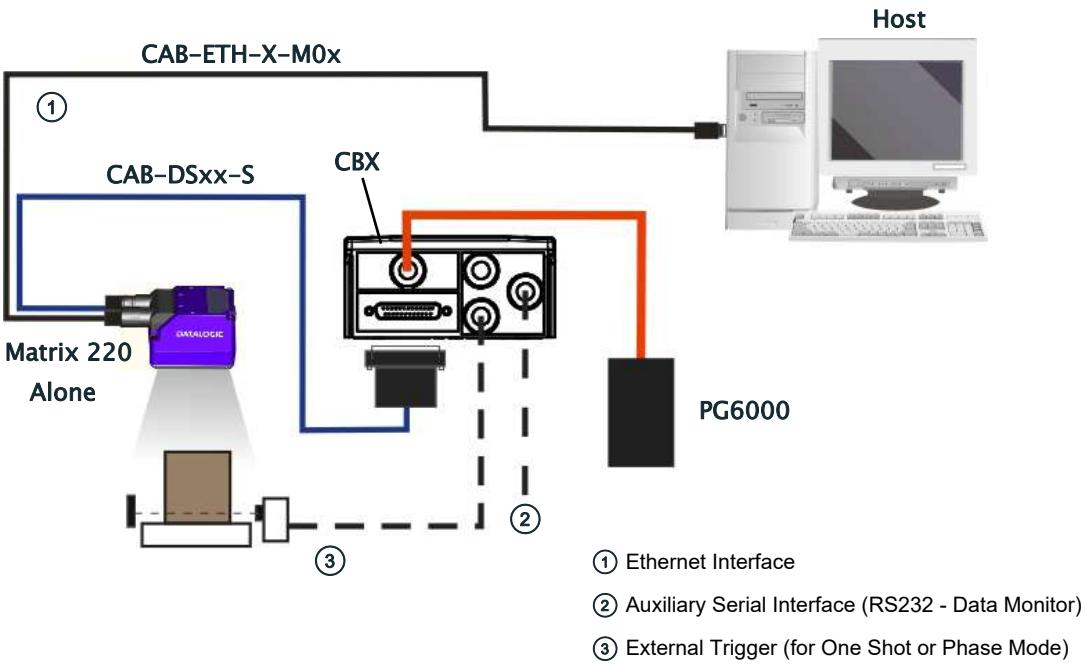

Figure 69 – Ethernet Point-to-Point Layout

All devices always support multiple output channels (i.e. for data monitoring).

When using a Local Area Network (LAN), one or more Matrix 220 readers can be connected to the network by using **CAB-ETH-X-M0x** cables:

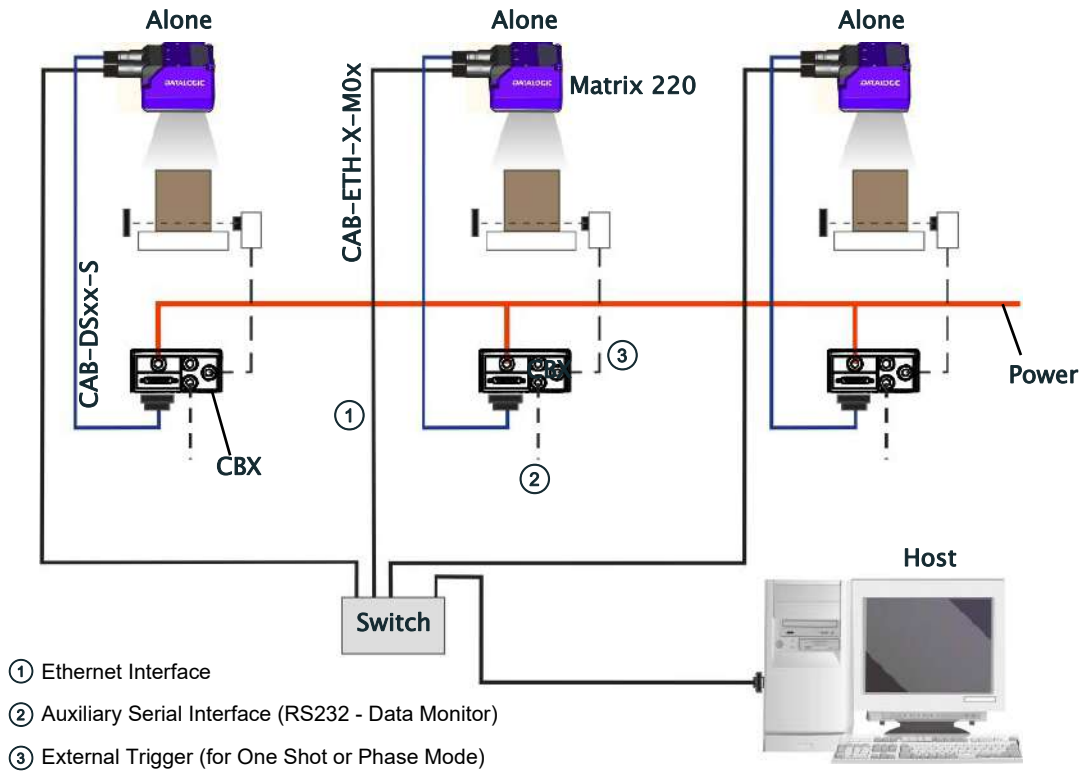

Figure 70 – Ethernet Network Layout

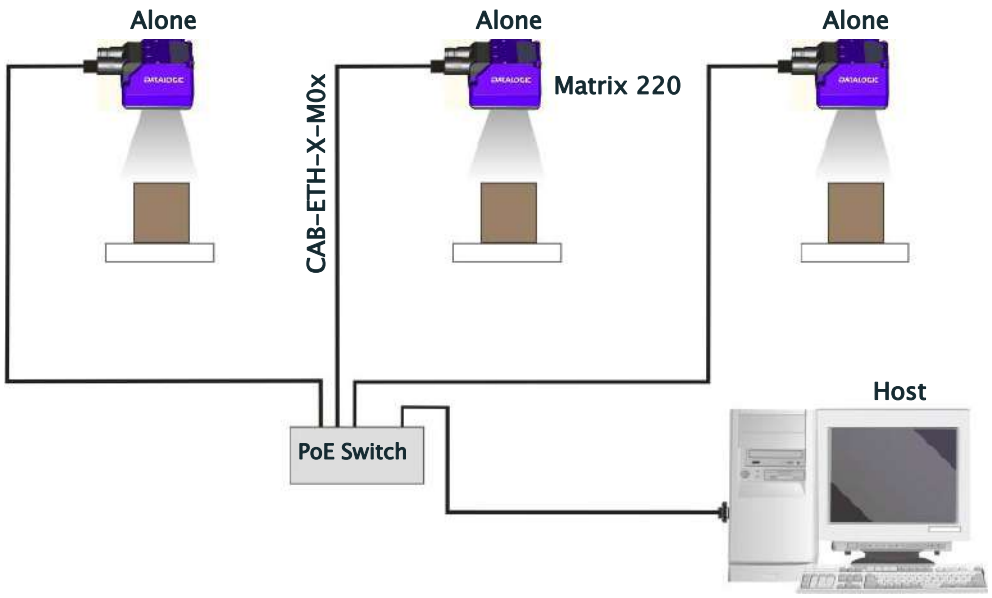

Figure 71 – PoE Ethernet Network Layout

Serial Connection

In this layout the data is transmitted to the Host on the main serial interface. The Ethernet interface can be used for reader configuration by connecting a laptop computer running DL.CODE.

Data can be transmitted on the RS232 auxiliary interface independently from the main interface selection to monitor data.

When One Shot or Phase Mode operating mode is used, the reader can be activated by an External Trigger (for example a pulse from a photoelectric sensor) when the object enters its reading zone.

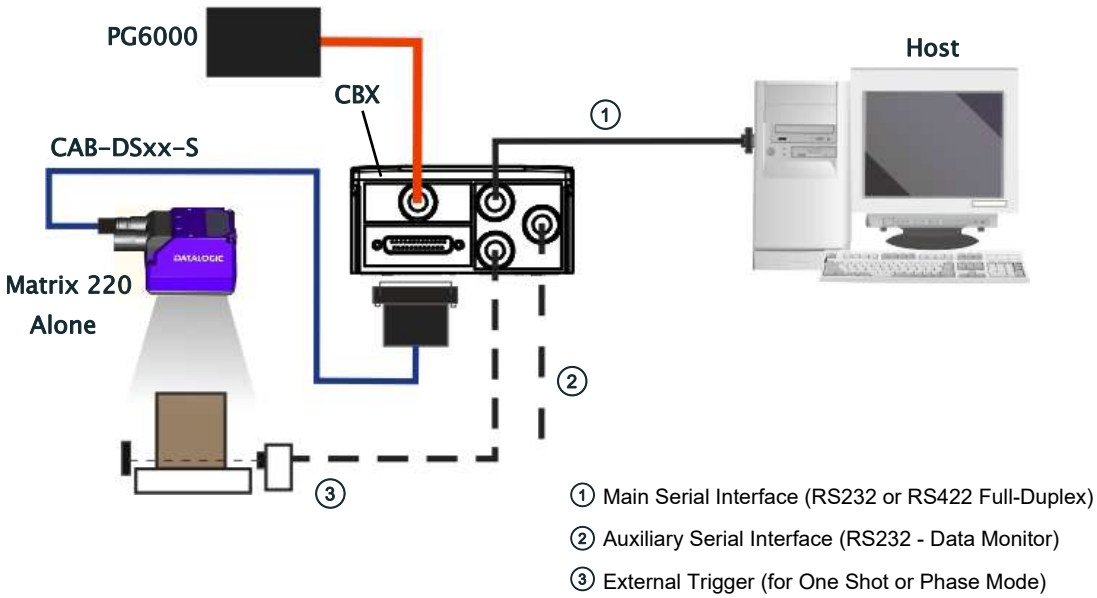

Figure 72 – Serial Interface Point-to-Point Layout

All devices always support multiple output channels (i.e. for data monitoring).

Fieldbus Connection

In this layout a single reader functions as a Slave node on a Fieldbus network. The data is transmitted to the Host through an accessory Fieldbus interface board installed inside the CBX500 connection box.

Reader configuration can be accomplished through the Ethernet interface using the DL.CODE configuration program.

Data can be transmitted on the RS232 auxiliary interface independently from the Fieldbus interface selection to monitor data.

When One Shot or Phase Mode operating mode is used, the reader can be activated by an External Trigger (photoelectric sensor) when the object enters its reading zone.

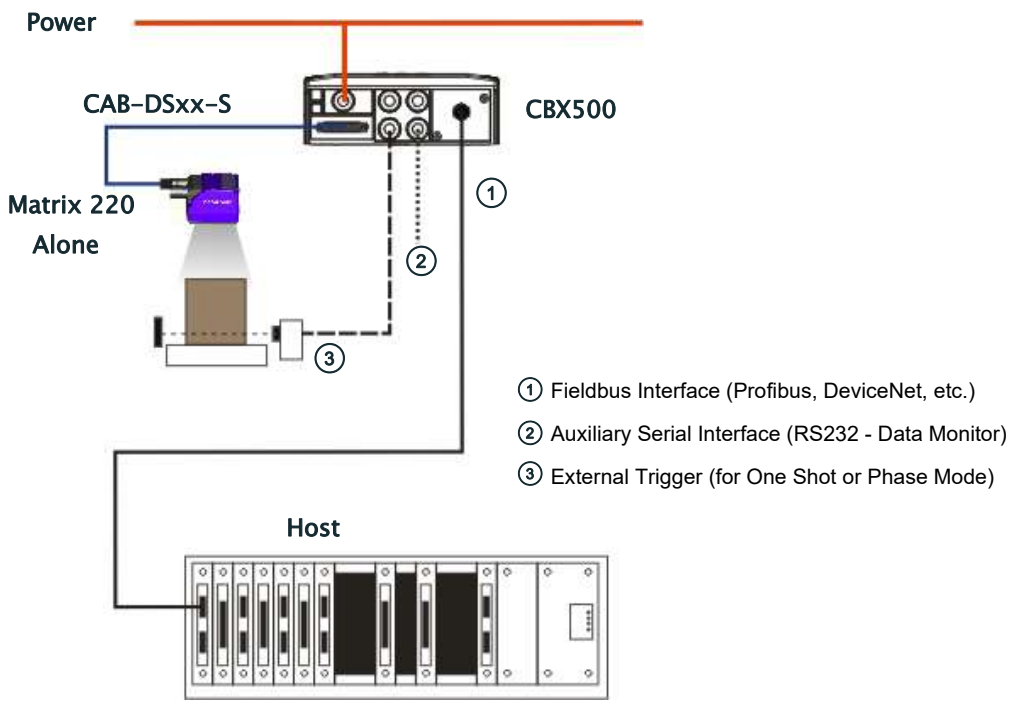

Figure 73 – Fieldbus Interface Point-to-Point Layout

All devices always support multiple output channels (i.e. for data monitoring).

Pass-Through

The pass-through layout allows each device **working Alone**, to collect data from one or more pass-through input channels and send this data plus its own on one or more different output channels.

In this way independent devices can be connected together in combinations to create multi device networks. Many devices reading independently can send their messages through a common output channel which instead of being directed at a Host can be collected by another device on its pass-through input channel and sent to a Host on a different output channel.

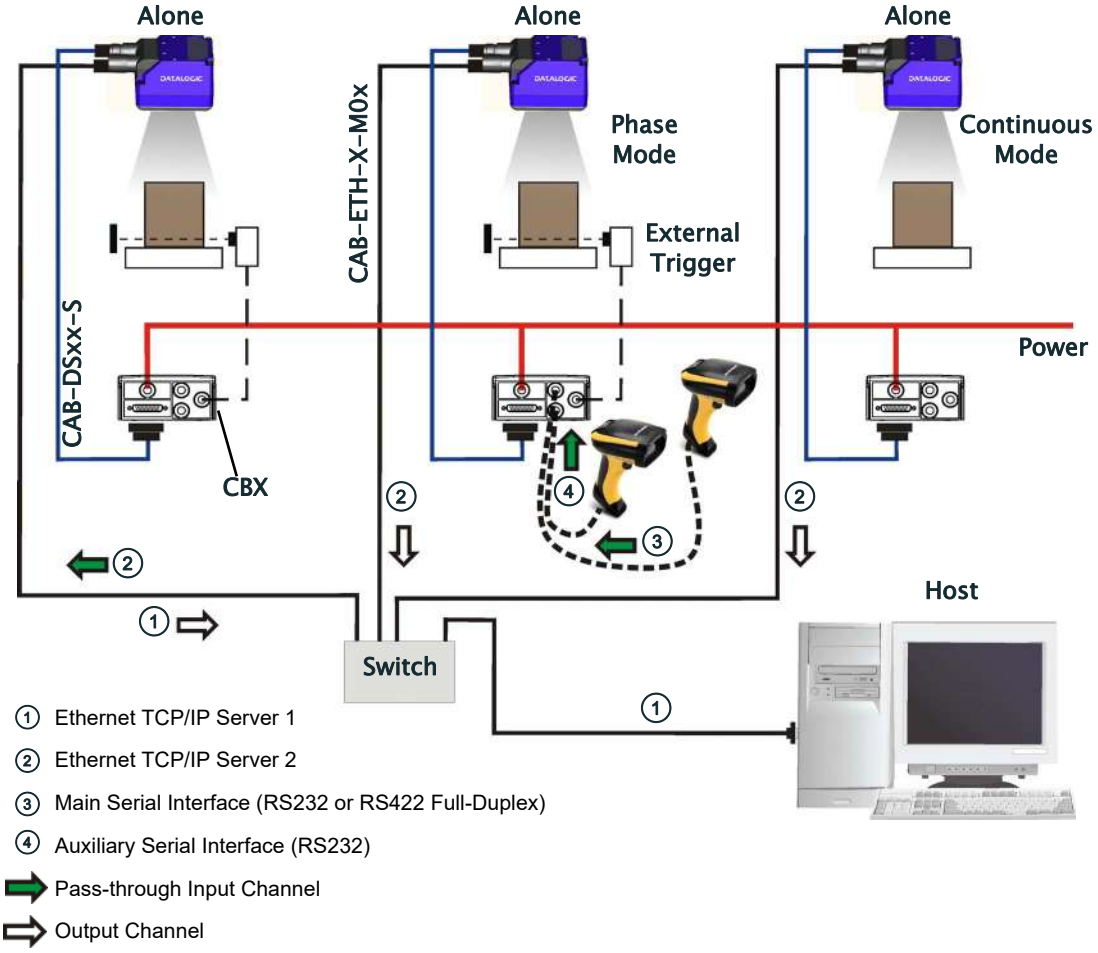

Figure 74 – Pass-Through Layout

In a Pass-through layout each device supports multiple pass-through configurations to accept input from different devices on different channels (i.e. middle reader above). However, readers are not required to have a pass-through configuration if they don't need to receive data from an input channel (i.e. right reader above). The overall data collection device always has at least one pass-through configuration to collect the input data from the other devices and send it to the Host (i.e. left reader above).

All devices always support multiple output channels (i.e. for data monitoring).

In a Pass-through layout each device can have a different operating mode: Continuous, One Shot, Phase Mode, etc.

ID-NET Multidata Network (Pass-Through)

A special case of the pass-through layout allows each Slave device **working Alone**, to collect data from one or more pass-through input channels and send this data plus its own on the ID-NET output channel to the Master.

The Slave readers are connected together using the ID-NET interface. Every Slave reader must have an ID-NET address in the range 1-31.

The Master collects the data from its pass-through ID-NET input channel and sends it to the Host on a different output channel.

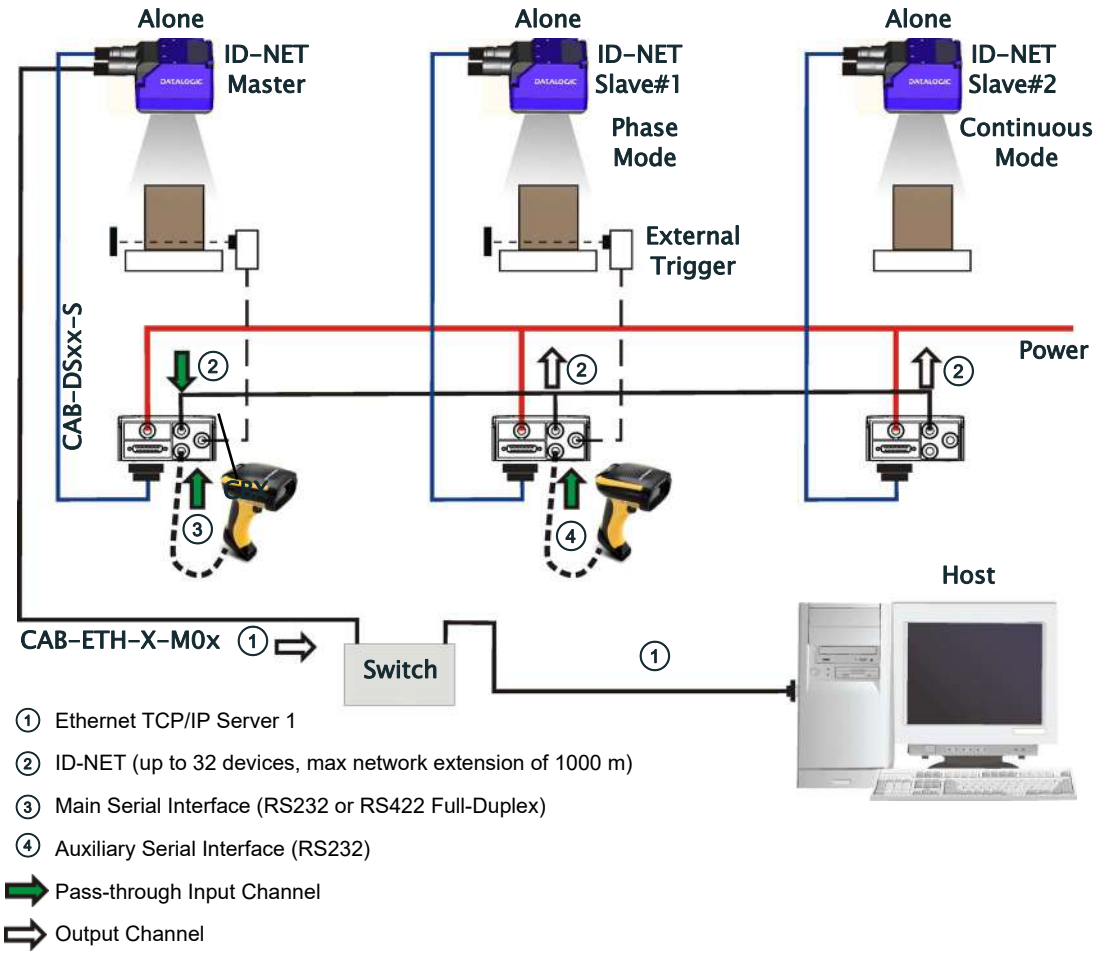

Figure 75 - ID-NET Multidata Layout (Pass-through)

In a Pass-through layout each device supports multiple pass-through configurations to accept input from different devices on different channels (i.e. Master reader above). However, ID-NET Slave readers are not required to have a pass-through configuration if they don't need to receive data from an input channel (i.e. right reader above). The ID-NET Master always has at least one pass-through configuration to collect the ID-NET Slaves data and send it to the Host.

NOTE

Slave devices cannot receive data from a pass-through ID-NET input channel and Master devices cannot send data on an ID-NET output channel.

All devices always support multiple output channels (i.e. for data monitoring).

In a Pass-through layout each device can have a different operating mode: Continuous, One Shot, Phase Mode, etc.

ID-NET Synchronized Network

When the device is **working Synchronized**, the ID-NET connection is used to collect data from several readers to build a multi-point or a multi-sided reading system; there can be one Master and up to 31 Slaves connected together.

The Slave readers are connected together using the ID-NET interface. Every slave reader must have an ID-NET address in the range 1-31.

The Master reader is also connected to the Host on one of its communication channels. In the following examples the RS232/RS422 main serial interface is used.

For a Master/Slave Synchronized layout the External Trigger signal is unique to the system; there is a single reading phase and a single message from the Master reader to the Host computer. **It is not necessary to bring the External Trigger signal to all the readers.**

In the Master/Slave Synchronized layout the Master operating mode can only be set to PackTrack or Phase Mode.

The Main and ID-NET interfaces are connected as shown in the following figures.

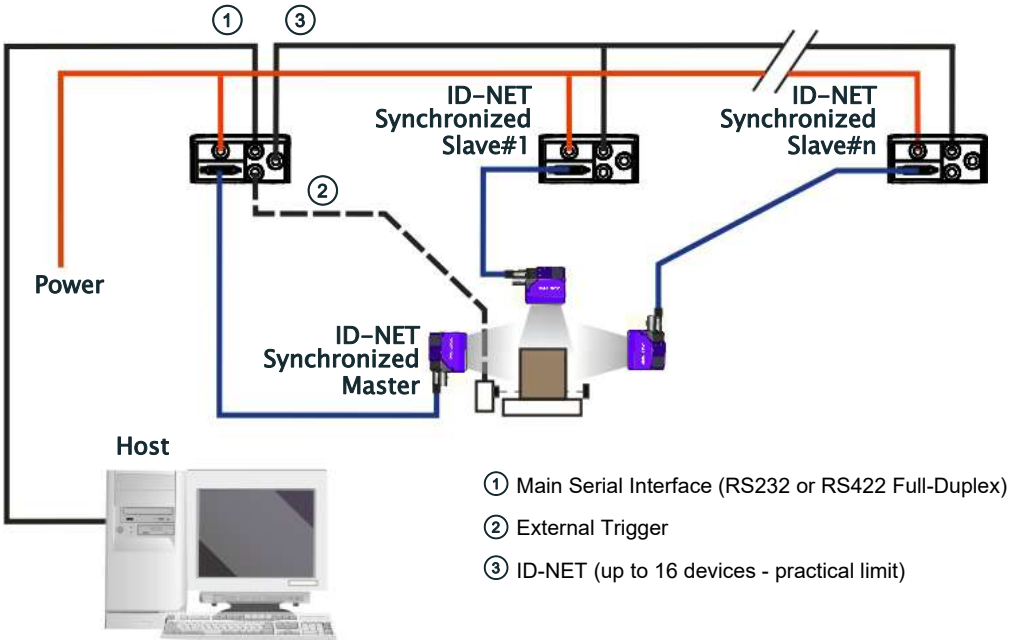

Figure 76 – ID-NET Synchronized Layout

The Master reader can be connected to the CBX series connection box with the advantage of the Backup and Restore configuration function (CBX + BM100 module).

All devices always support multiple output channels (i.e. for data monitoring).

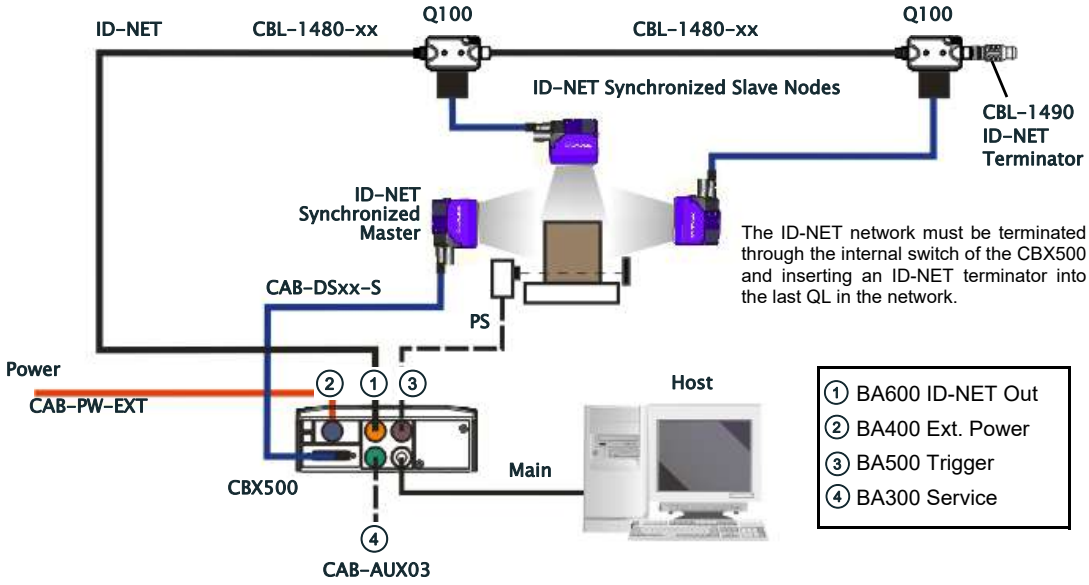

Figure 77 – ID-NET Synchronized Layout Matrix 220 Master with CBX500 + Matrix 220 Slaves with QL100

If the Backup and Restore function is not required, then a QL300 can be used to connect the master reader.

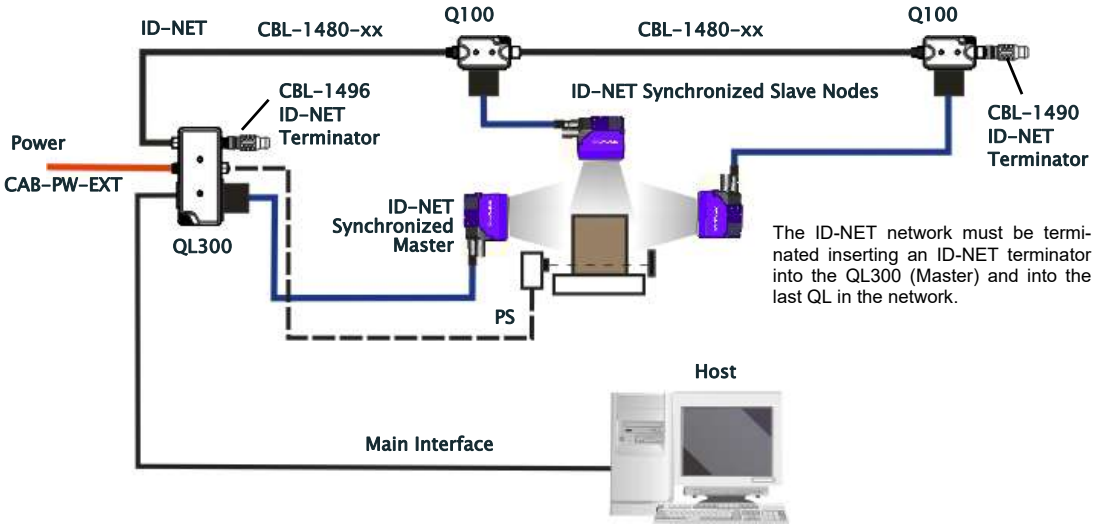

Figure 78 – ID-NET Synchronized Layout Matrix 220 Master with QL300+ Matrix 220 Slaves with QL100

The same configuration can be made to a Host using the on-board Ethernet interface to the Master. The TCP/IP Ethernet and ID-NET interfaces are connected as shown in the figure below.

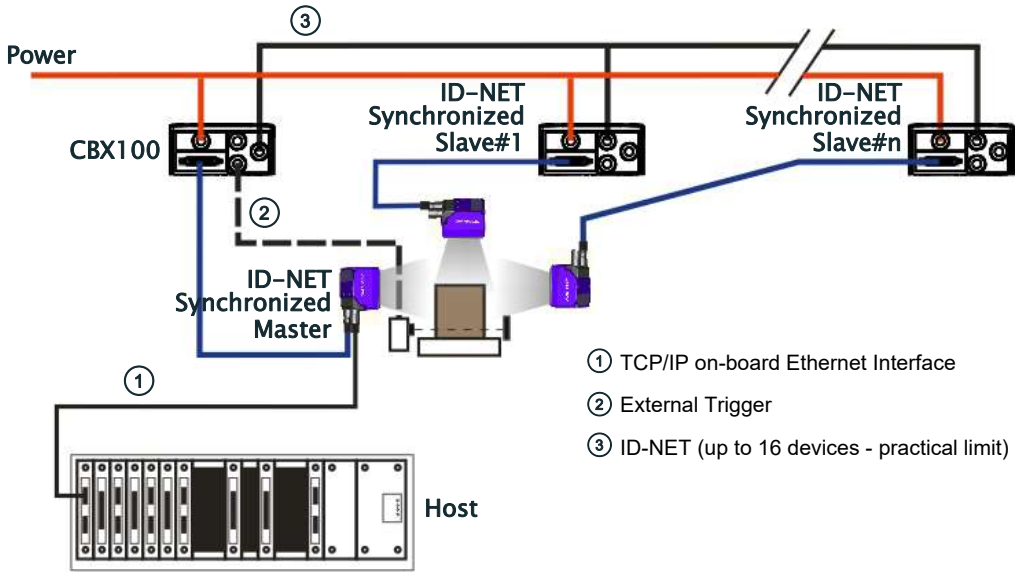

Figure 79 – ID-NET Synchronized Layout with Master on-board TCP/IP Ethernet Interface to Host

Alternatively, the Master reader can communicate to the Host as a Slave node on a Fieldbus network. This requires using an accessory Fieldbus interface board installed inside the CBX500 connection box. System configuration can be accomplished through the Ethernet interface of each individual reader using the DL.CODE configuration program.

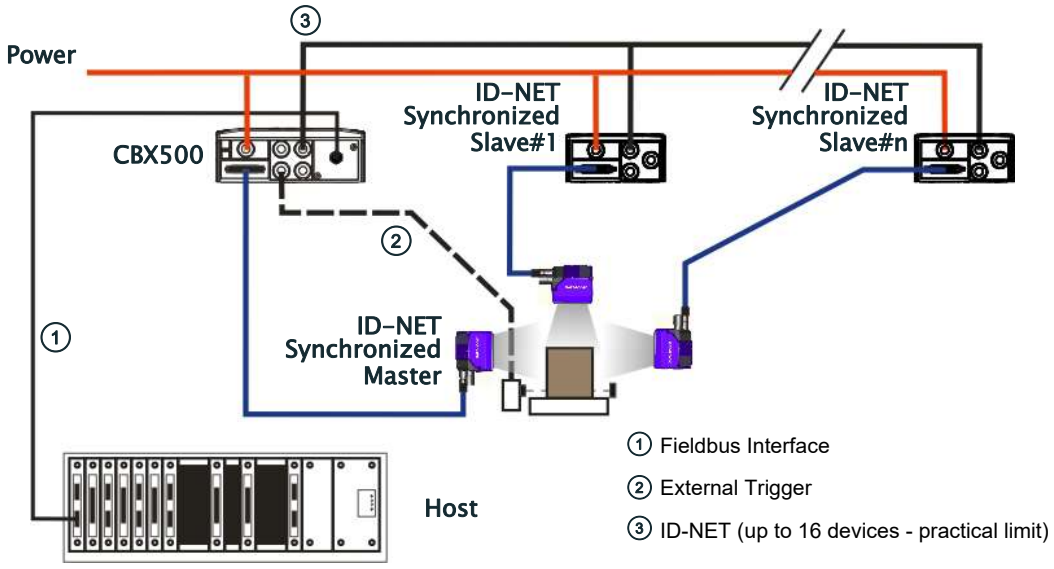

Figure 80 – ID-NET Synchronized Layout with Master CBX500 Fieldbus Interface to Host

Chapter 6
Reading Features

FOV Calculation

Use the data in the following table to calculate the FOV for your application, referring to Figure 81 and the formula below.

Focal Length	F/#	d_0	View Angle Horizontal	View Angle Vertical	View Angle Diagonal	Min Reading Distance mm
7 mm	F/4	11 mm	38°	29°	48°	40 mm
12 mm	F/5	4 mm	24°	18°	30°	40 mm

The viewing angle has a tolerance of ± 1° depending on the reading distance.

$$FOV_x = 2\,[\,(d + d_0) * \tan(\alpha_x/2)\,]$$

where:
FOV_x = horizontal, vertical or diagonal FOV
α_x = horizontal, vertical or diagonal viewing angles.
d = reading distance (in mm) from window surface to code surface
d_0 = offset (in mm) from center of lens to external window surface

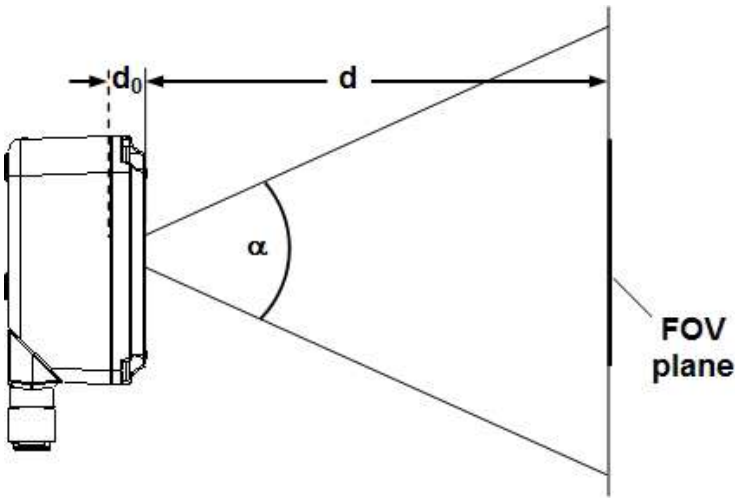

Figure 81 – Reading Distance References

Example:

The FOV for a **Matrix 220 355-0x0** at a **reading distance of 200 mm** is:

$FOV_H = 2\ [(200\ mm + 4\ mm) * \tan(24°/2)] \cong$ **87 mm**
$FOV_V = 2\ [(200\ mm + 4\ mm) * \tan(18°/2)] \cong$ **65 mm**

Global FOV Diagrams

NOTE

The following diagrams are given for typical performance at 25°C using high quality grade A symbols according to ISO/IEC 15416 (1D code) and ISO/IEC 15415 (2D code) print quality test specifications. Testing should be performed with actual application codes in order to maximize the application performance.

The following diagrams show the **maximum obtainable** Field of View for 1D and 2D codes. **Depending on the code resolution, symbology, and number of characters in the code, the Reading Area can be different from the FOV**.

See the "Reading Diagrams," starting on page 105 for specific reading area examples.

7 mm Models (38° Horizontal View Angle)

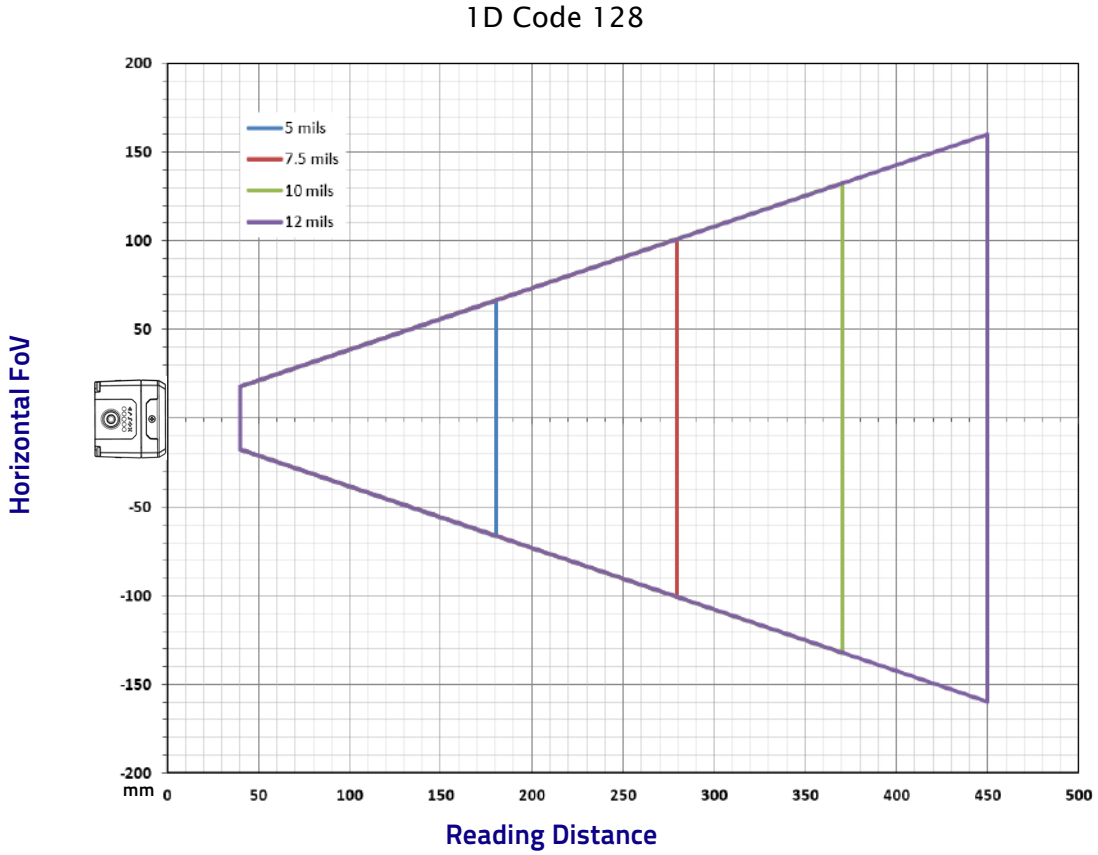

Figure 82 – 7 mm Global FOV Diagram

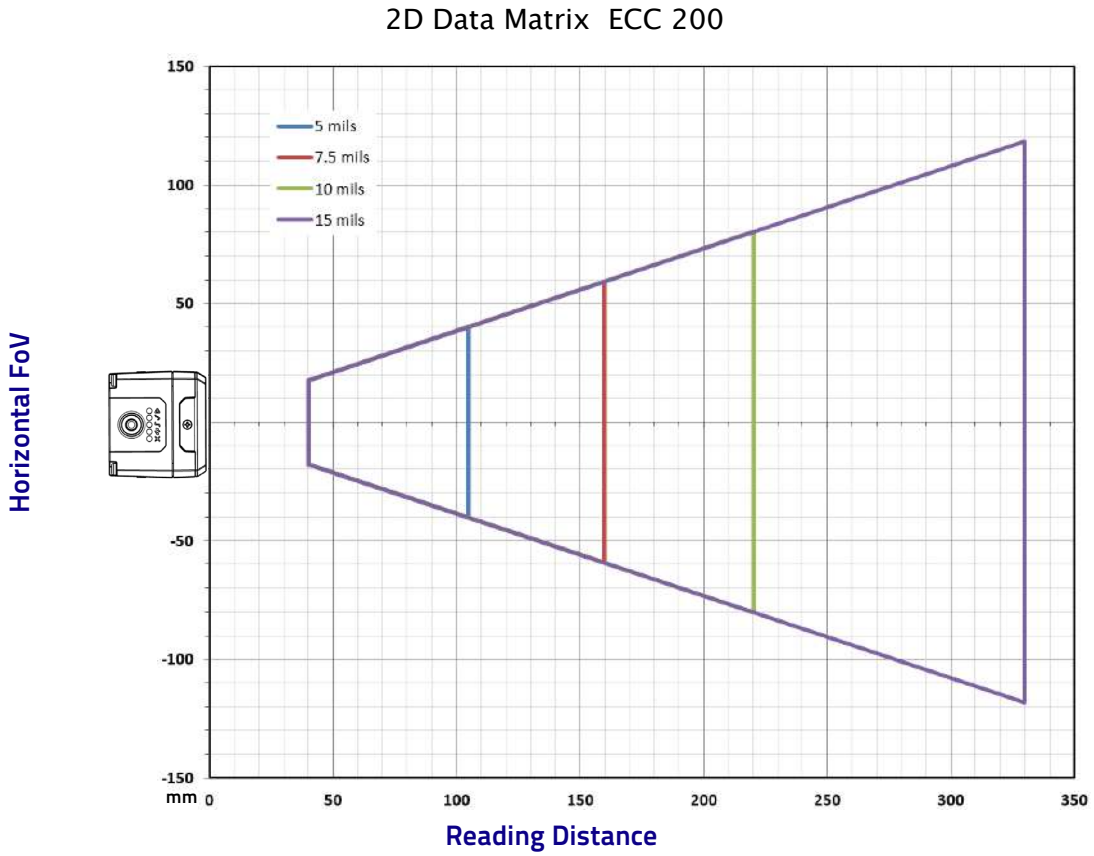

Figure 83 – 7 mm Global FOV Diagram

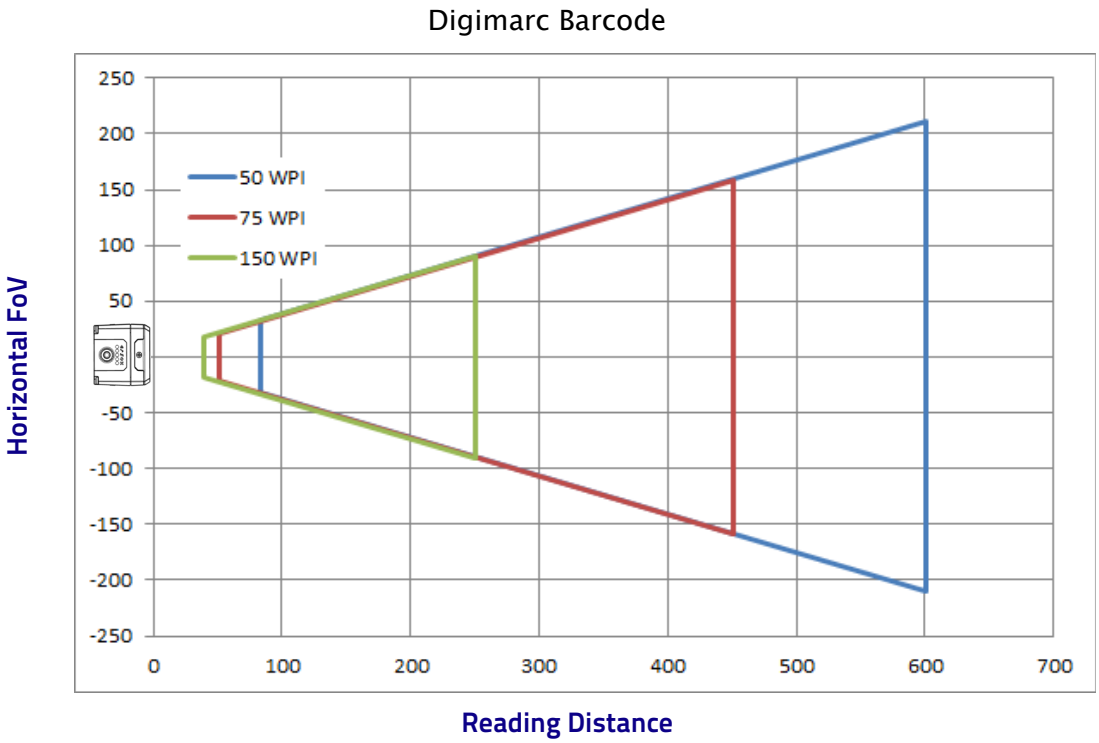

Figure 84 – 7 mm Global FOV Diagram

12 mm Models (24° Horizontal View Angle)

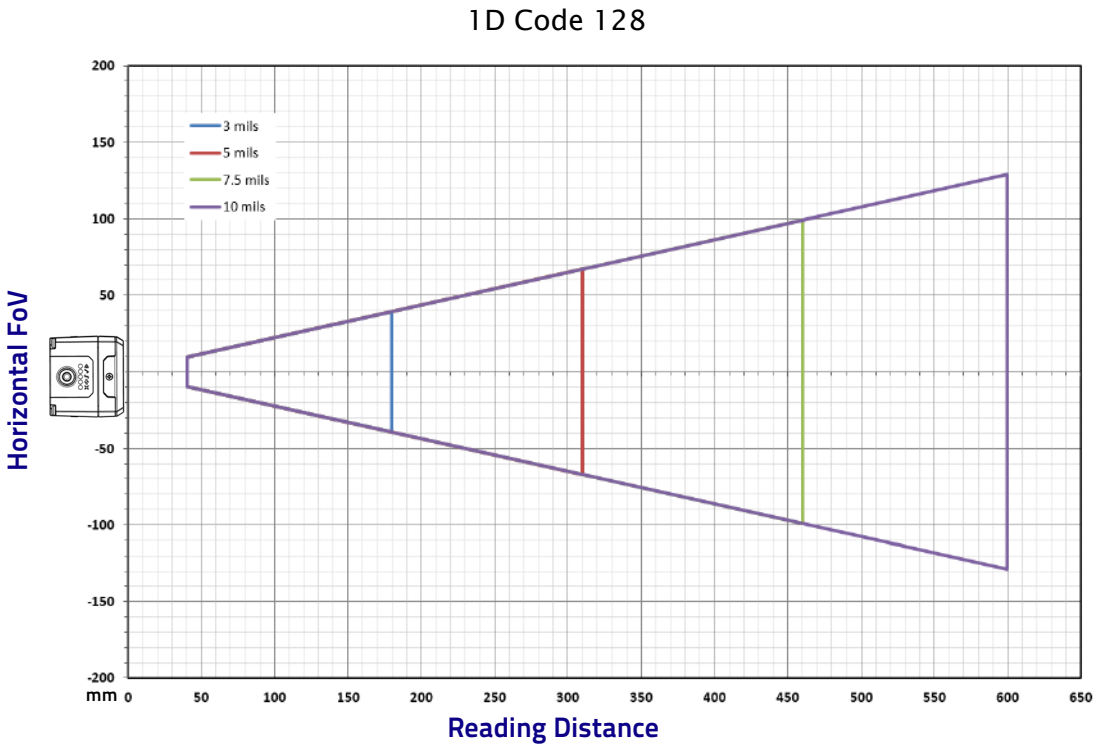

Figure 85 – 12 mm Global FOV Diagram

2D Data Matrix ECC 200

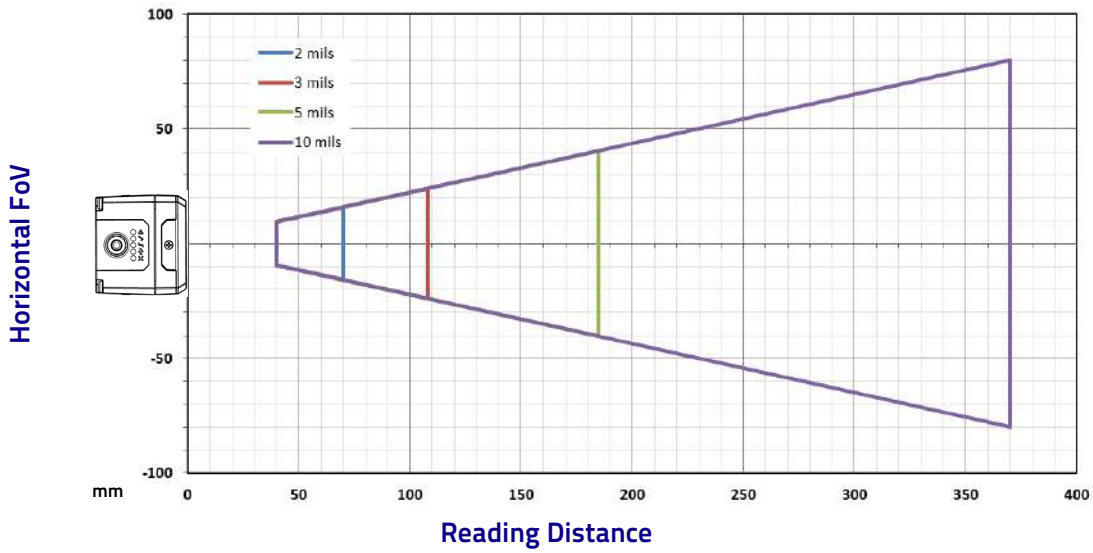

Figure 86 – 12 mm Global FOV Diagram

Digimarc Barcode

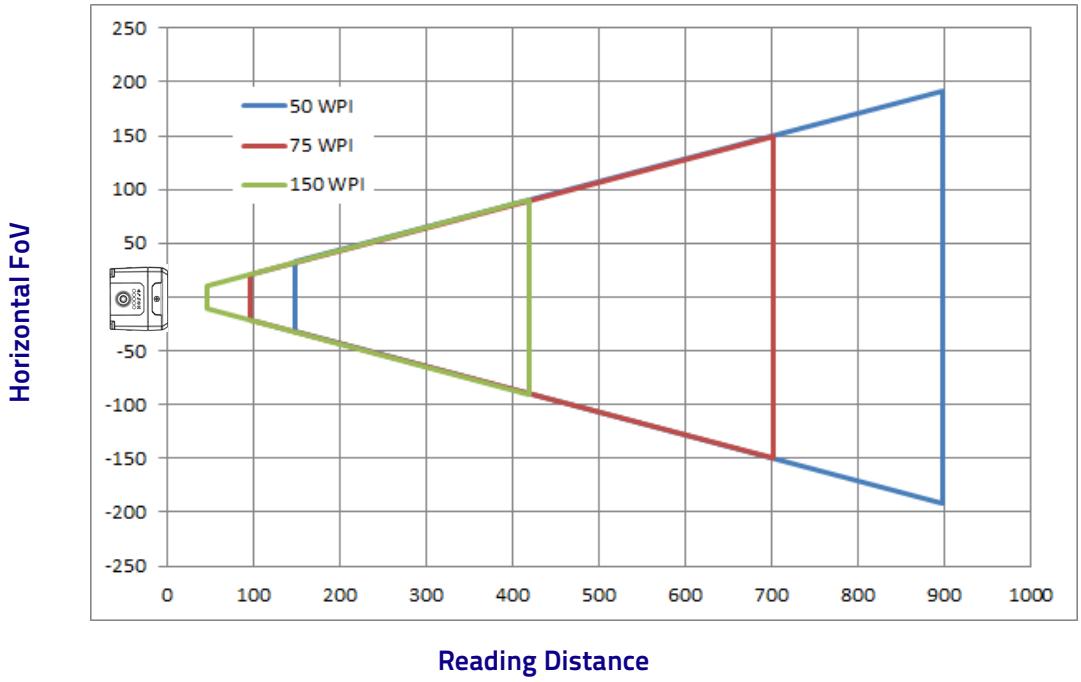

Figure 87 – 12 mm Global FOV Diagram

Reading Diagrams

- The following reading diagrams are to be considered as references and are given for typical performance at 25°C using high quality grade A symbols: Code 128 (1D code) and Data Matrix ECC 200 (2D code) from the Test Charts provided with the reader.
- Testing should be performed with the actual Matrix 220 using application codes in order to evaluate whether maximizing application performance requires adjustments to the HW/SW configuration with respect to the Reference Conditions given under each diagram.
- The ratio of the Vertical FOV width with respect to the Horizontal FOV width in the diagrams is about equal to 0.75; specifically 960/1280. (i.e. $FOV_{V.} \cong FOV_H$ x 0.75).
- The reading distance ranges are measured from the reading window surface.
- The max theoretical Line Speed values for each diagram can be calculated using the formula in "Maximum Line Speed and Exposure Time Calculations" on page 112.
- Common software parameter settings other than default settings are:

  For reading 1D code symbologies: *Narrow Quiet Zone=Enabled*.

  For reading 2D code symbologies: *Code Contrast=Standard; Decoding Complexity=Medium*.
- When defining a HW/SW configuration for the Matrix 220 for conditions different from those of the reference diagrams, it is suggested to keep in mind the following rules:
  - Changes in *Exposure Time* act directly proportional to the luminosity of the image and inversely proportional to the maximum code reading movement speed. Consequently, reducing the *Exposure Time* by half, reduces the luminosity of the image by half but doubles the theoretical code reading movement speed.
  - Changes in *Gain* act directly proportional to the luminosity of the image. Increasing the *Gain* value however, can reduce the quality of the acquired image.
  - For the DPM illuminators, the overall lighting power being considered is all Sectors ON from the **Internal LED Group**, unless specified otherwise.

Matrix 220 (7 mm models) 1D Codes

Matrix 220 (7 mm lens – 38° Horizontal View Angle)

Code 128 0.20 mm (8 mils)

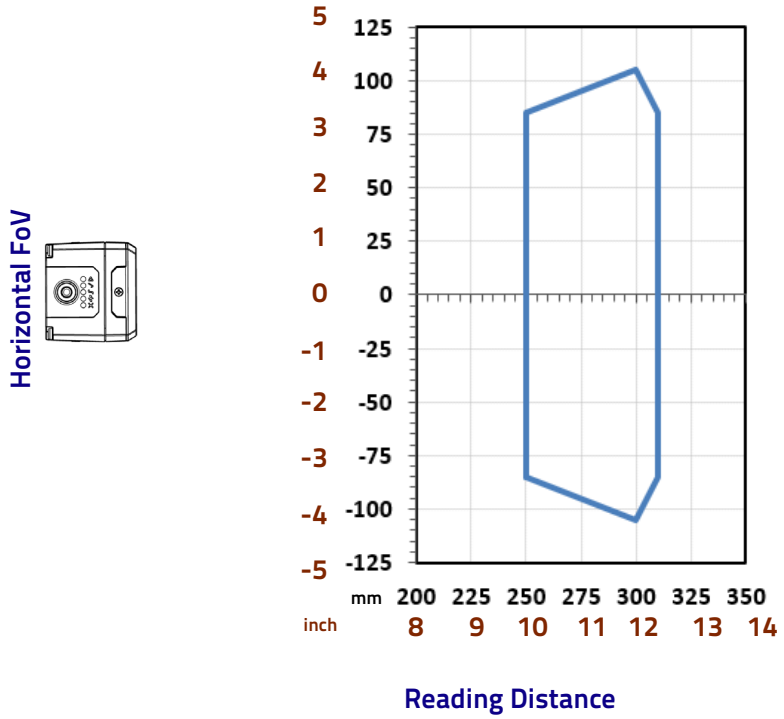

Conditions			
Hardware Settings			
Code Symbology	Code 128		
Code Resolution	8 mils		
Tilt Angle	0°		
Skew Angle	15°		
Focusing Distance	300 mm		
Software Parameters			
Reader Model	DPM-R (382-xxx)	DPM-B (392-xxx)	DPM-R-HP (302-xxx)
LED Group	Non Polarized	Non Polarized	Non Polarized
Exposure Time	300 µs	320 µs	300 µs
Gain	48	52	30
Gain Multiplier	x2	x2	x1

Matrix 220 (7 mm lens – 38° Horizontal View Angle)

Code 128 0.30 mm (12 mils)

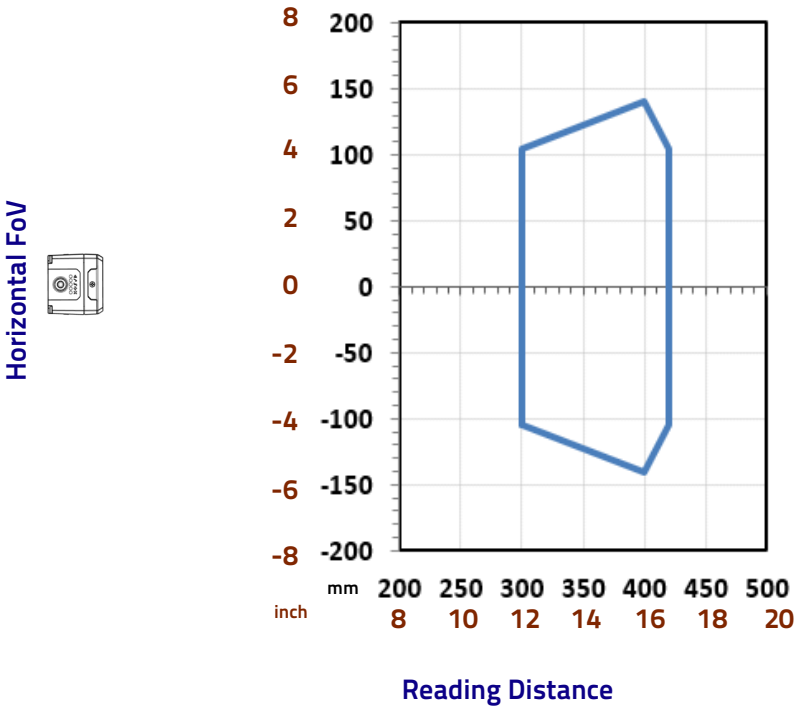

Conditions	
Hardware Settings	
Code Symbology	Code 128
Code Resolution	12 mils
Tilt Angle	0°
Skew Angle	15°
Focusing Distance	400 mm
Software Parameters	
Reader Model	STD (352-xxx)
Sectors	Top + Bottom
Exposure Time	300 µs
Gain	24
Gain Multiplier	x1

Matrix 220 (7 mm models) 2D Codes

Matrix 220 (7 mm lens – 38° Horizontal View Angle)

Data Matrix 0.13 mm (5 mils)

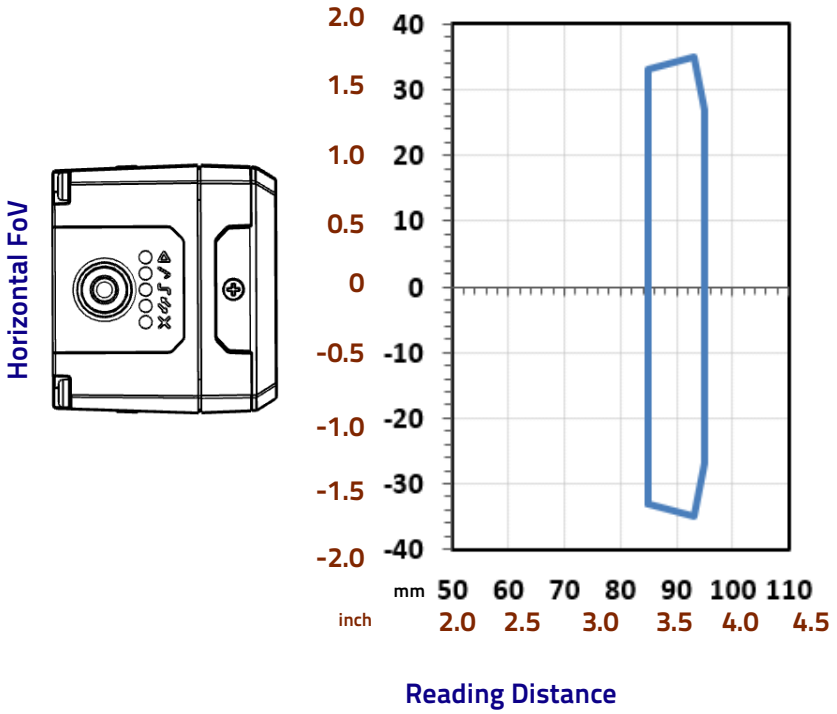

Conditions				
Hardware Settings				
Code Symbology	Data Matrix ECC 200			
Code Resolution	5 mils			
Tilt Angle	0°			
Skew Angle	15°			
Focusing Distance	95 mm			
Software Parameters				
Reader Model	STD (352-xxx)	DPM-R (382-xxx)	DPM-B (392-xxx)	DPM-R-HP (302-xxx)
Sectors | LED Group	Top + Bottom	Diffused	Diffused	Polarized
Exposure Time	80 µs	280 µs	300 µs	220 µs
Gain	8	28	30	20
Gain Multiplier	x1	x2	x2	x1

Matrix 220 (12 mm models) 1D Codes

Matrix 220 (12 mm lens – 24° Horizontal View Angle)

Code 128 0.15 mm (6 mils)

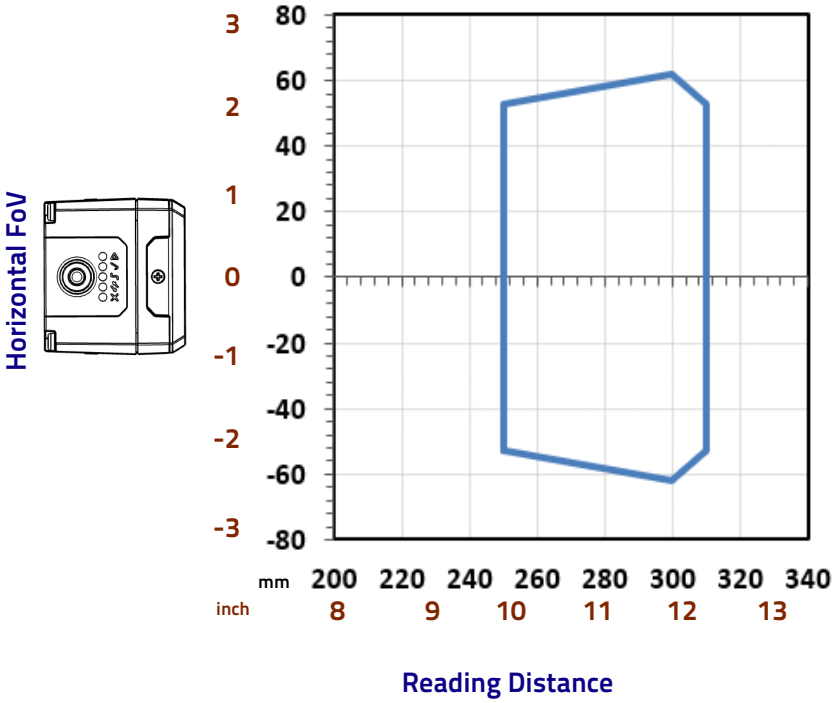

Conditions			
Hardware Settings			
Code Symbology	Code 128		
Code Resolution	6 mils		
Tilt Angle	0°		
Skew Angle	15°		
Focusing Distance	300 mm		
Software Parameters			
Reader Model	DPM-R (385-xxx)	DPM-B (395-xxx)	DPM-R-HP (305-xxx)
LED Group	Non Polarized	Non Polarized	Non Polarized
Exposure Time	400 µs	450 µs	260 µs
Gain	46	50	26
Gain Multiplier	x2	x2	x2

Matrix 220 (12 mm lens – 24° Horizontal View Angle)

Code 128 0.25 mm (10 mils)

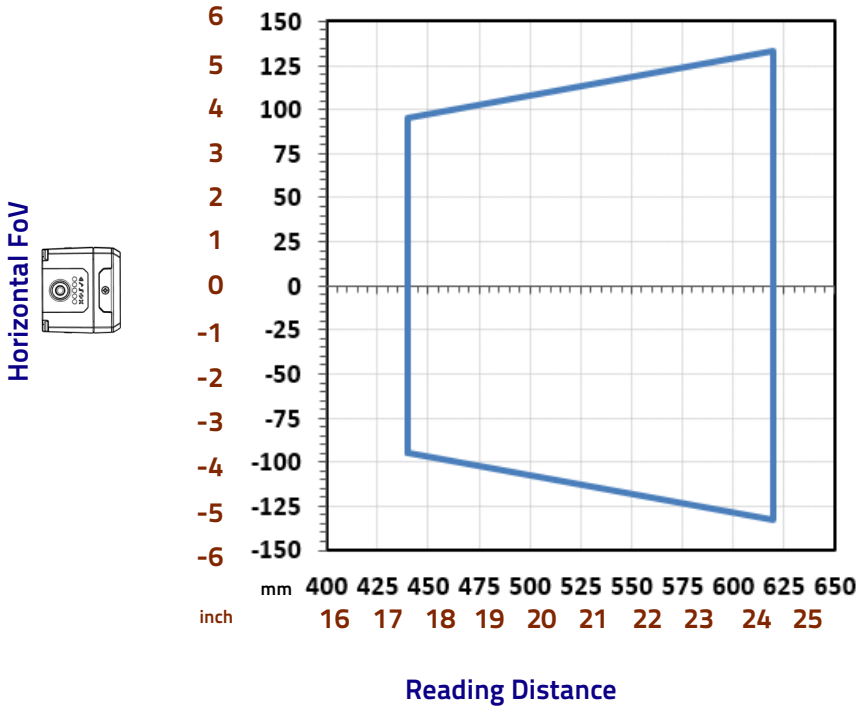

Conditions		
Hardware Settings		
Code Symbology	Code 128	
Code Resolution	10 mils	
Tilt Angle	0°	
Skew Angle	15°	
Focusing Distance	560 mm	
Software Parameters		
Reader Model	STD (355-xxx)	STD-W-HP (345-xxx)
Sectors	Top + Bottom	Internal + External
Exposure Time	450 µs	250 µs
Gain	45	40
Gain Multiplier	x1	x1

Matrix 220 (12 mm models) 2D Codes

Matrix 220 (12 mm lens – 24° Horizontal View Angle)

Data Matrix 0.076 mm (3 mils)

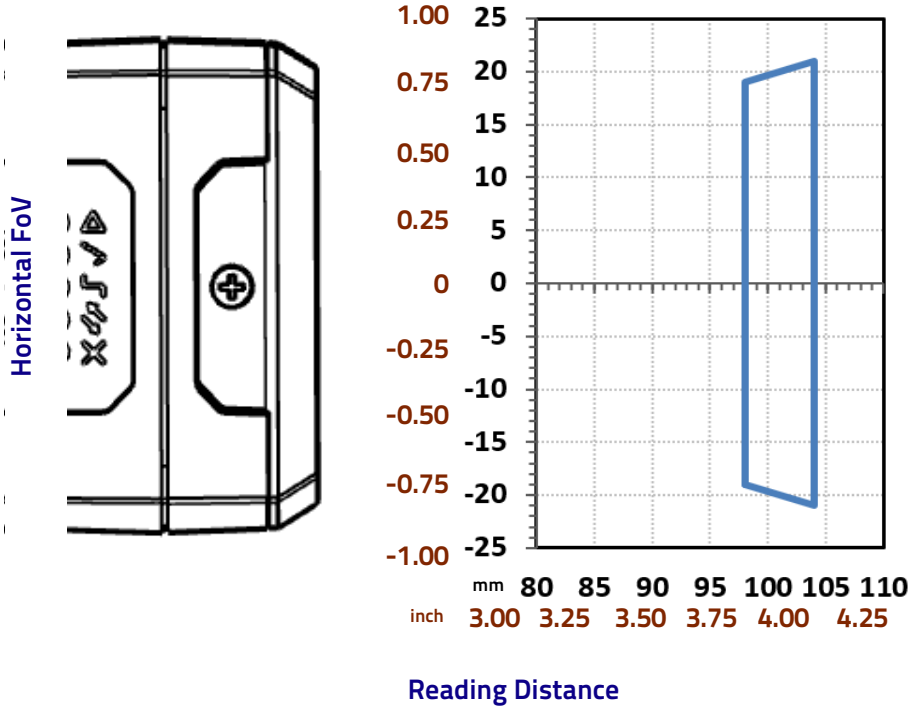

Conditions					
Hardware Settings					
Code Symbology	Data Matrix ECC 200				
Code Resolution	3 mils				
Tilt Angle	0°				
Skew Angle	15°				
Focusing Distance	102 mm				
Software Parameters					
Reader Model	STD (355-xxx)	STD-W-HP (345-xxx)	DPM-R (385-xxx)	DPM-B (395-xxx)	DPM-R-HP (305-xxx)
Sectors | LED Group	Top + Bottom	Internal + External	Diffused	Diffused	Polarized
Exposure Time	120 µs	70 µs	350 µs	400 µs	280 µs
Gain	12	10	40	40	28
Gain Multiplier	x1	x1	x2	x2	x1

Maximum Line Speed and Exposure Time Calculations

The *Exposure Time* parameter defines the time during which the image will be exposed to the reader sensor to be acquired. This parameter depends heavily on the environmental conditions (external lighting system, image contrast etc.).

In general, a longer time corresponds to a lighter image but is susceptible to blurring due to the code movement; a shorter exposure time corresponds to a darker image.

NOTE

With the Matrix 220 High Power Illuminator models the lighting power is doubled with respect to the non-High Power Illuminator models. This means that for a given lighting condition the High Power models can capture images at half the exposure time (double the line speed).

NOTE

The following considerations must be applied only when the internal lighting system and 2D codes are used. The Maximum line speed allowed for linear codes or postal code reading applications heavily depends on the direction of symbol movement. When the direction of movement is parallel to the elements of the code, the maximum speed is greater

Assuming:

- **X**: Code Resolution (mm)
- T_{exp}: Exposure Time (s)
- **LS**: Line Speed (mm/s)

The essential condition to avoid blurring effects between two adjacent elements in a dynamic reading application is:

$$LS * T_{exp} \leq X$$

The maximum (theoretical) line speed **LS** can be calculated as follows:

$$X / T_{exp\ (min)} = LS_{\ (max)}$$

$T_{exp\ (min)}$ is the minimum *Exposure Time* value obtainable for the specific application. It can be evaluated in static reading conditions and depends on the Matrix reader model selected for the application (internal lighting system, optical lens, reading distance) and on any external lighting system. It may also depend on code printing quality, and reader position.

Example:

A Matrix 220 using:

Internal Lighting Mode = Very High Power Strobe

Exposure Time (µs) = 100 µs

Code Resolution (X) = 0.254 mm (10 mils)

has a maximum line speed of:

0.254 (mm) / 0.0001 (s) = 2540 mm/s

Likewise, $T_{exp\ (max)}$ is the maximum *Exposure Time* value that can be used without blurring for the given application line speed and code resolution. Therefore:

$$X / LS = T_{exp\ (max)}$$

$T_{exp\ (max)}$ and $LS_{(max)}$ are represented in the graph below as the curved line for **X** (code resolution). Values above the curve result in blurring. In practice, the application values are somewhere below the theoretical line, (in the green area), due to environmental and other conditions.

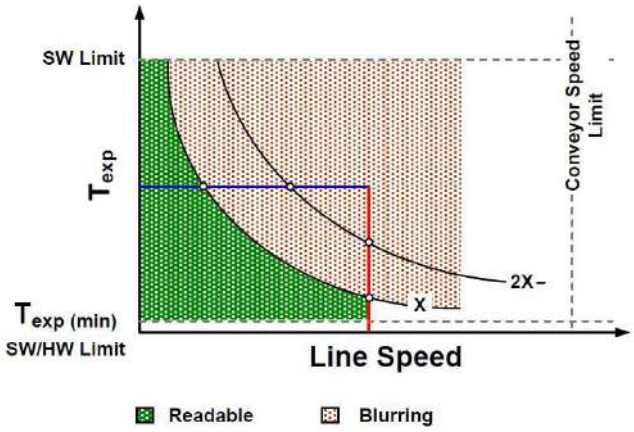

For example, the maximum target speed in the application is also affected by these conditions:

- **Code/Background Contrast**: maximum speed decreases when decreasing image contrast (poor quality codes, reflective transparent coverings, different supports and printing techniques).
- **Code Resolution**: maximum speed increases when decreasing code resolution, (i.e. **2X**). There is a decrement of overlapping effects between two adjacent elements.
- **Tilt Angle**: maximum speed decreases when increasing Tilt angle (from 0 to 45 degrees).

The *Internal Lighting* parameter allows setting the operating mode of the internal lighting system. The possible values are:

- *Disabled*: the built-in LED array is turned off all the time. This option can be useful if using an external lighting system;
- *-Power Strobed*: the built-in LED array is on only during the image exposure time. Different Power Strobed lighting levels can be set.
- *Continuous High-Power*: the internal lighting system is turned on continuously at the highest power level. This option is useful if the LED-array blinking (produced by -Power Strobed lighting modes and rapidly occurring reading phases) disturbs the operator.

NOTE

To avoid LED array overheating, for Power Strobed settings, the program automatically limits the range of allowed values for the Exposure Time parameter. Therefore, after changes to Internal Lighting, recheck Exposure Time.

Chapter 7
Software Configuration

Software configuration of your Matrix 220 for static reading or simple code reading applications can be accomplished by the Rapid Configuration procedure using the X-PRESS HMI (which requires no external configuration program). This procedure is described in Chapter 1, Steps 3-4.

For the majority of applications however you will use DL.CODE, connecting to the reader through the on-board Ethernet interface. See Chapter 1, Steps 5-6.

DL.CODE System Requirements

CAUTION

DL.CODE does not currently support Windows Embedded (often used in industrial PCs and/or PLCs).

To install and run DL.CODE you should have a Laptop or PC that meets or exceeds the following:

- 2.00 GHz or faster microprocessor
- Windows: 7, 8.1, or 10
- 1 GB RAM
- 2 GB hard disk for 64-bit machines; 1 GB hard disk for 32-bit machines
- 100 Base-T Ethernet
- One 19" or larger monitor (optimized for 1280x1024 resolution)

Reader Configuration

For an example of Matrix device configuration see the example in Chapter 1, Steps 5-6.

NOTE

Especially for lengthy configurations, it is always good practice to periodically save the configuration to permanent memory (Save on Device) to avoid losing the configuration in Temporary Memory. You must give a name to the new configuration or overwrite an existing one (except for Default which cannot be modified).

When all the configuration parameters are set correctly and saved to the device, you can perform a Backup to File and/or to an External storage device (BM100, etc.). See par. Backup and Restore Through DL.CODE.

NOTE

An improvement in the Matrix N Family readers allows them to contain several configurations or jobs in permanent memory.

This means that in addition to your application configuration(s), the Default configuration is always present on the reader and in fact it is not modifiable and cannot be deleted.

Auto-Calibration

DL.CODE provides the **Image Auto-Setup** tool to maximize the reading performance by tuning the acquisition parameters (photometry) automatically. By selecting the **Image Auto-Setup** tool from the Image Settings branch in the Advanced Setup step, the following window appears:

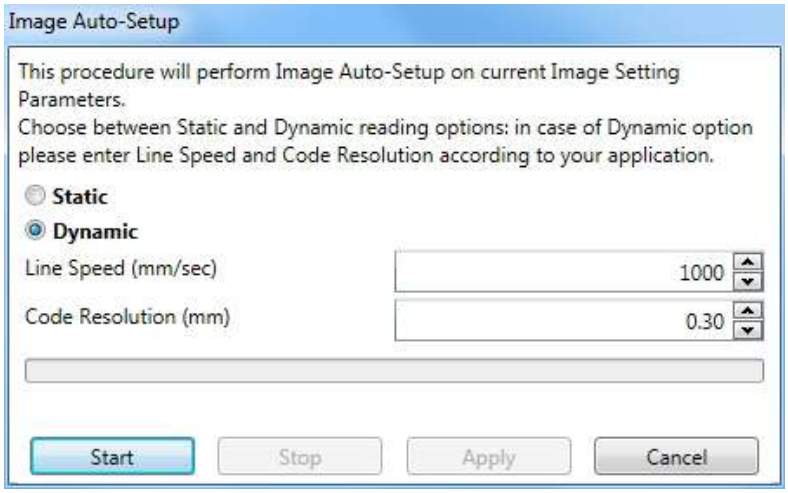

Select the Static or Dynamic Self-Tuning option; Start Image Auto-Setup and Apply to the Image Settings. The Advanced Setup window works interactively so that you can see the results of the parameter setting changes as well as the decoding results (Results panel).

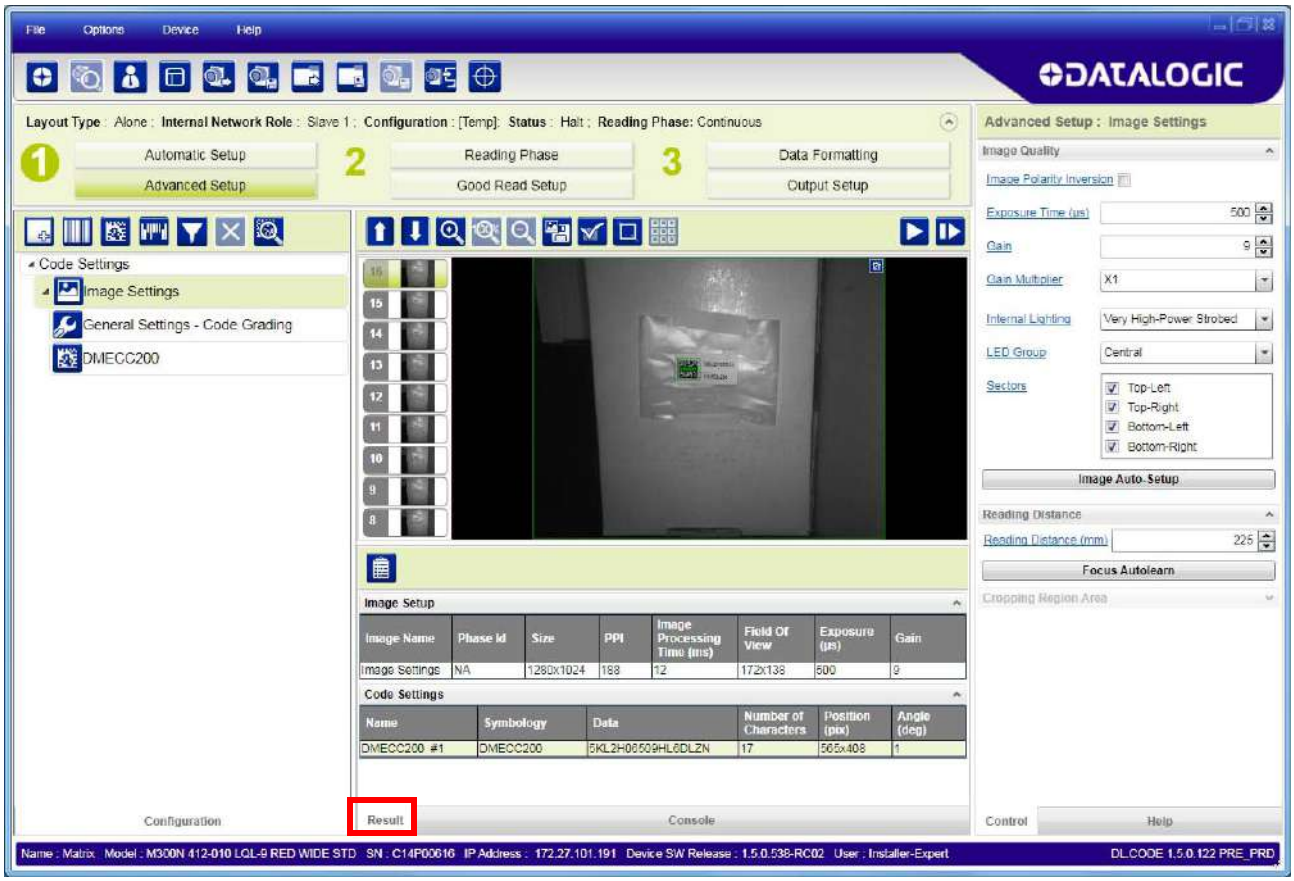

Figure 88 – Decoding Results OK

Manual Calibration

The following examples show some of the typical conditions occurring during the installation and how they can be tuned manually:

Under-exposure

To correct this result it is recommended to change the following parameters in their order of appearance:

1. increase the **Exposure Time**
2. increase the **Gain**

NOTE

In general, a longer exposure time corresponds to a lighter image but is susceptible to blurring due to code movement. Exposure time is also limited by the Internal Lighting mode parameter. Longer exposure times can be set if the power strobe level is lowered.

High gain settings may produce a grainy image that may affect the decoding process.

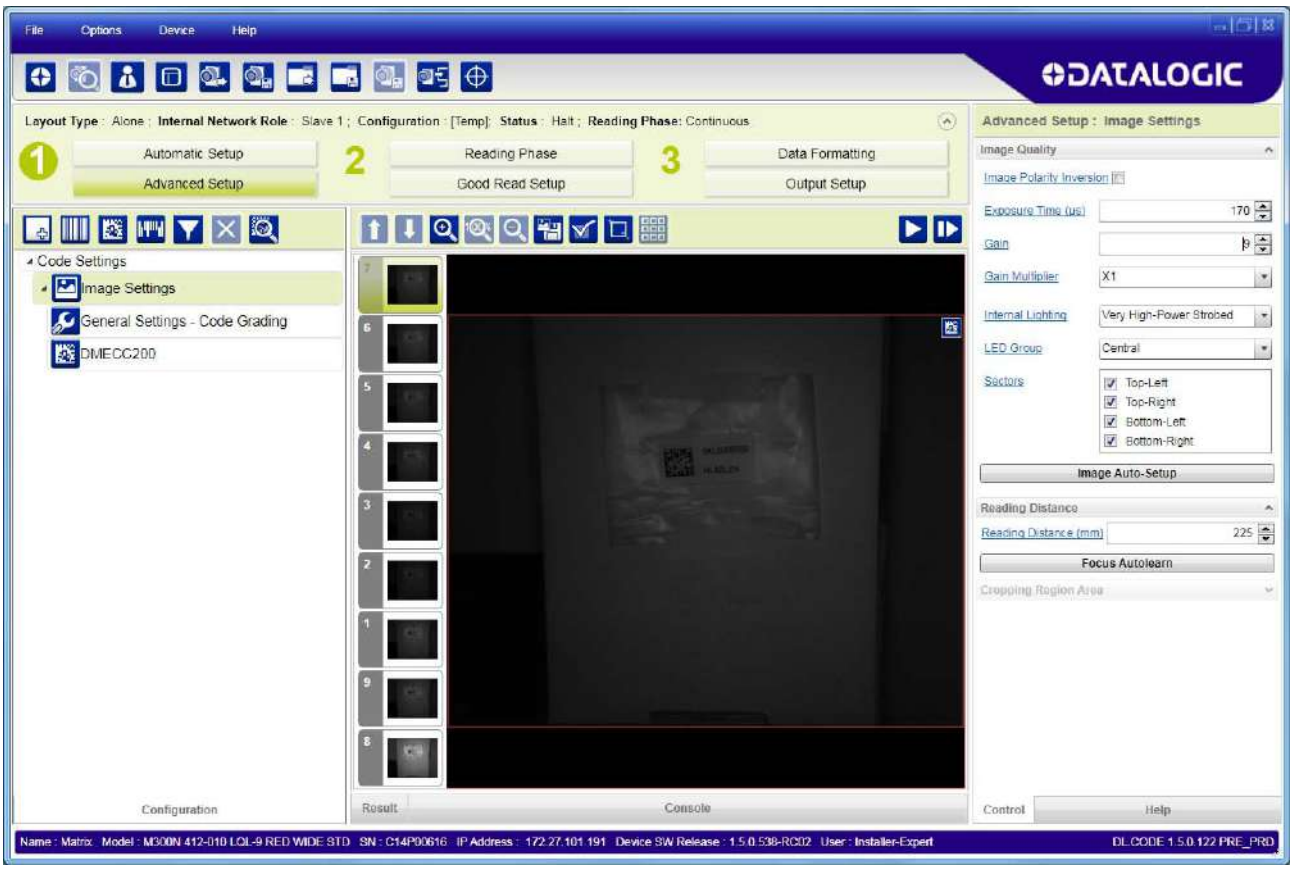

Figure 89 – Example Under Exposure: Too Dark

Over-exposure

To correct this result it is recommended to change the following parameters in their order of appearance:

1. decrease the **Gain**
2. decrease the **Exposure Time**

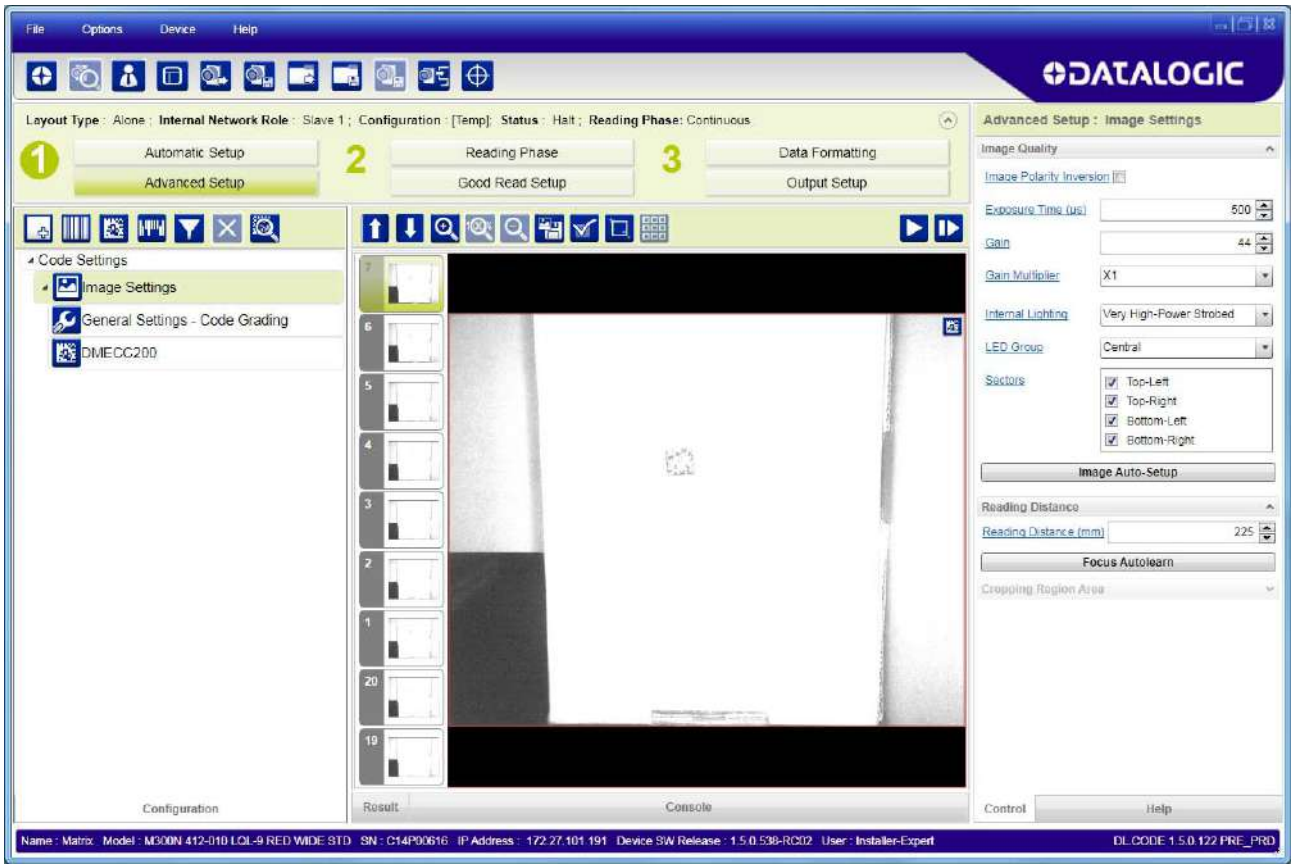

Figure 90 – Example Over Exposure: Too Light

Moving code out of the Field of View

To correct this result and have the code completely visible in FOV, it is possible to follow one or both the procedures listed below:

- reposition the reader
- use the **Delay on Trigger** and set the **Time** or **Space** values.

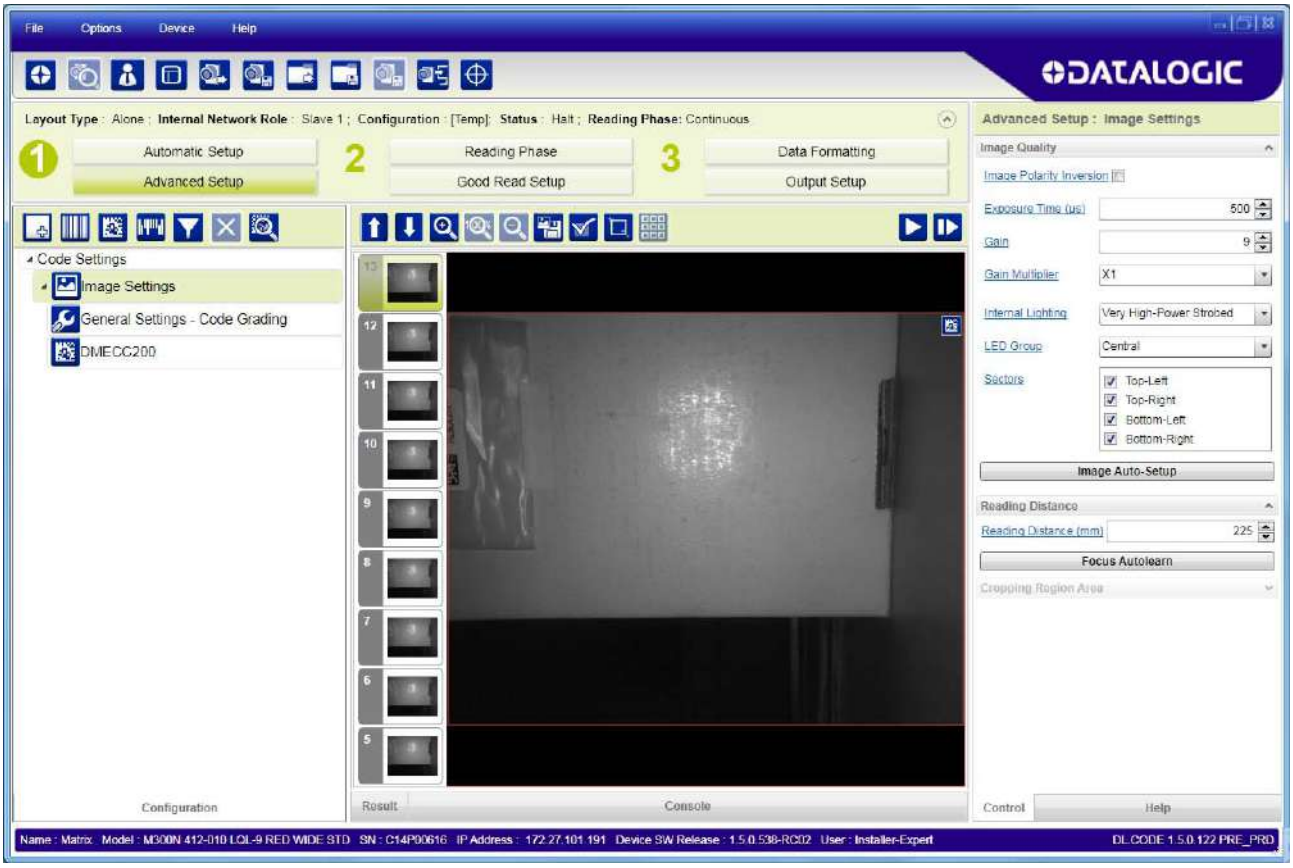

Figure 91 – Example Out of FOV

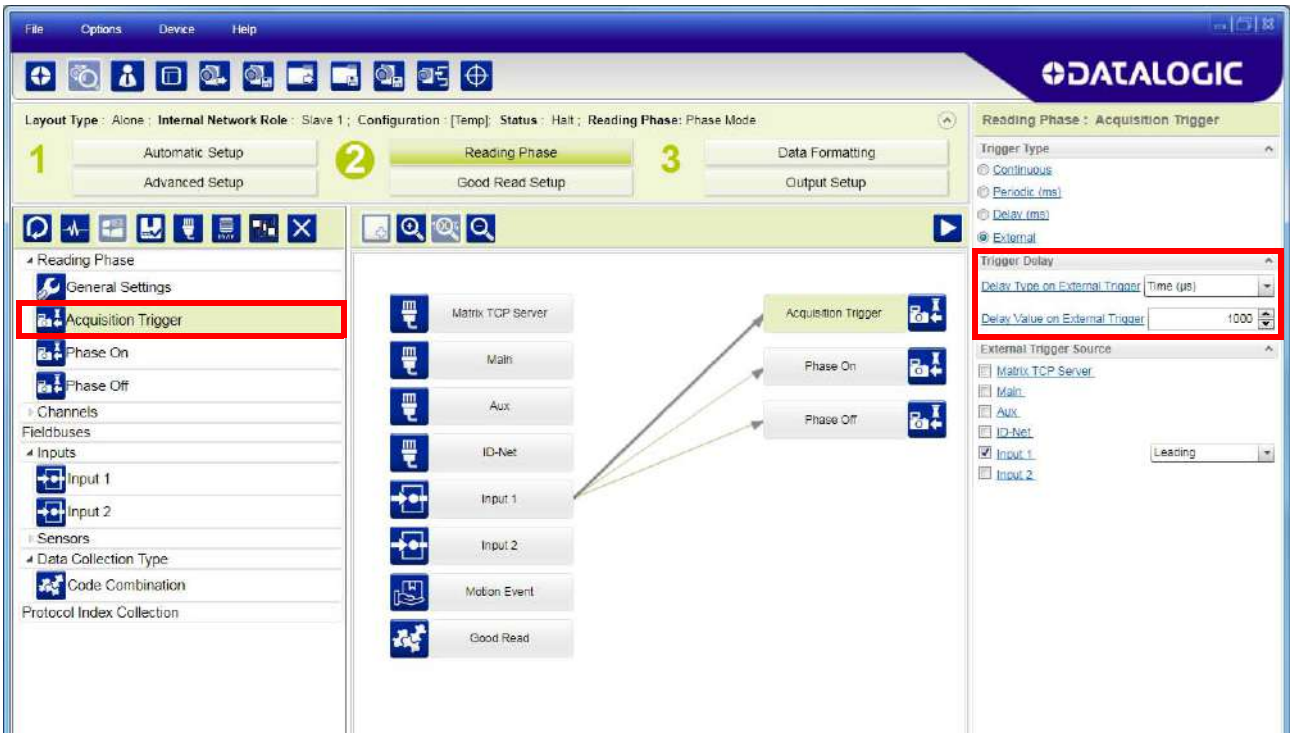

Figure 92 – Add Delay on Trigger to Correct Out of FOV

Multi Image Acquisition Settings

When controlled variable conditions occur in the application, Multiple *Image Acquisition Settings* can be defined to create a database of parameter groups that handle each specific application condition. This database of pre-defined settings improves system flexibility and readiness by being applied either automatically or selectively by an activation event.

For example, an application may have several stable but different lighting conditions which require different lighting options. One Image Acquisition Setting could enable and use an internal illuminator and another setting could enable and use an external lighting system.

This feature is available for all Operating Modes.

Image Settings are found in the DL.CODE **Advanced Setup** step. Up to 10 different Image Settings can be configured by adding them with the icon.

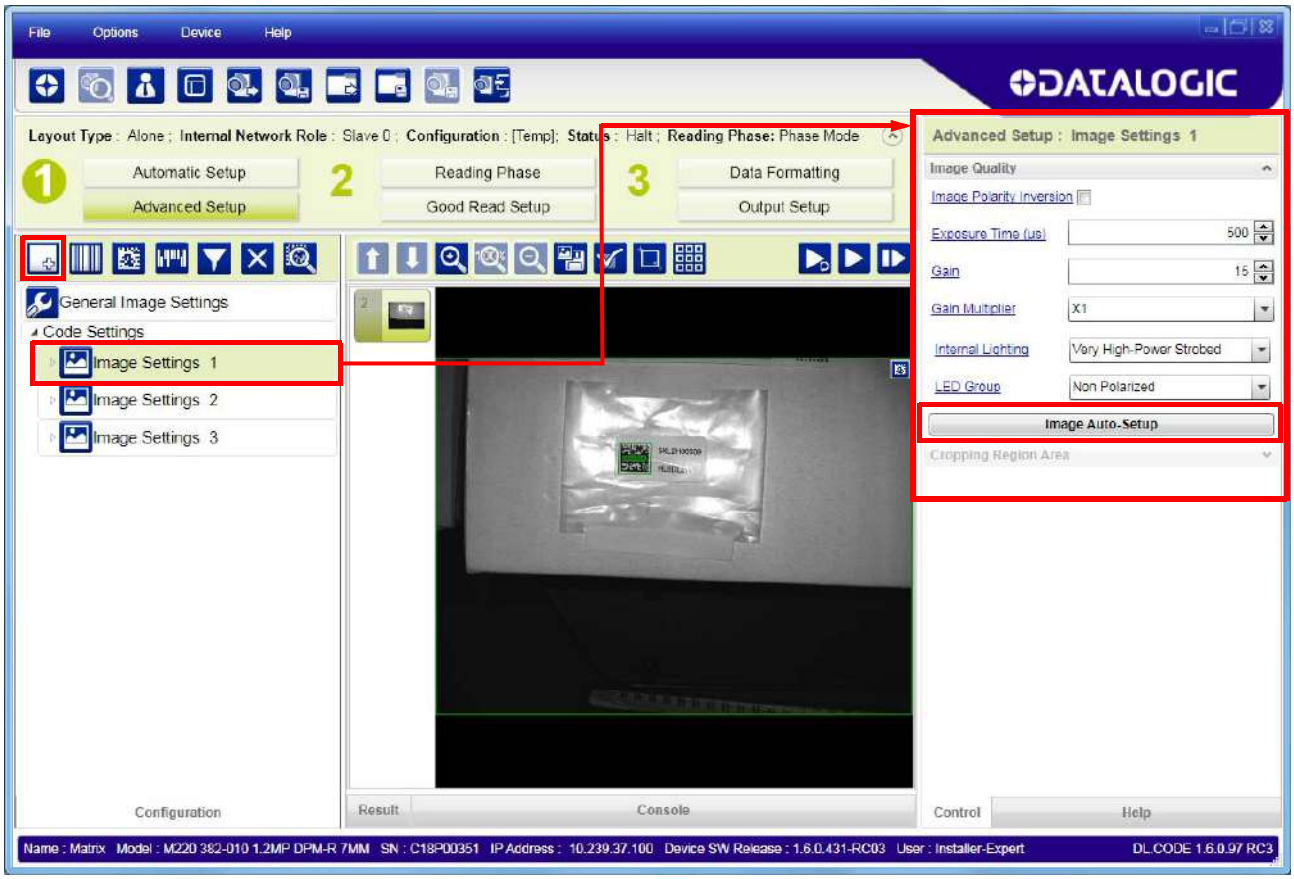

For each Image Setting condition start **Image Auto-Setup**, select the Static or Dynamic Self-Tuning option; and Apply it.

Automatic Image Settings Selection

If we don't know from one item to the next which reading condition will be presented, we will cycle through the pre-defined database of Image Settings (one per acquisition) in order to automatically capture the correctly lighted image over the course of several acquisitions. When the correct condition is matched, the result should be able to produce a Good Read.

When the **Image Settings Selection** is **Automatic** (default), then these Image Settings groups will be used cyclically.

NOTE

Applications typically require more than one acquisition to obtain sufficient Good Read percentages. This means that for N acquisitions we will surely have captured the correct lighting condition but we will also have captured some acquisitions with the wrong lighting condition. A consequence then is that we cannot run these types of applications at the maximum speed because not all the acquisitions are useful to us. We must wait for a sufficient number of acquisitions that will guarantee a Good Read result.

If items to be read having the same lighting conditions are grouped together, then we can improve the read rate through the **Start Acquisition From** parameter. By choosing the **Last Successful** value, we will start with the Image Setting that last produced a Good Read. For this group of items the last Image Setting used will be correct for the next item and so we start each cycle with the acquisition that will potentially produce a Good Read.

External Image Settings Selection

There are some applications where the lighting conditions are known before each item is read and therefore we can pre-select the correct Image Setting from an external source.

When the **Image Settings Selection** is **External**, Acquisition Sequences are created and by default each Image Setting has its own Acquisition Sequence.

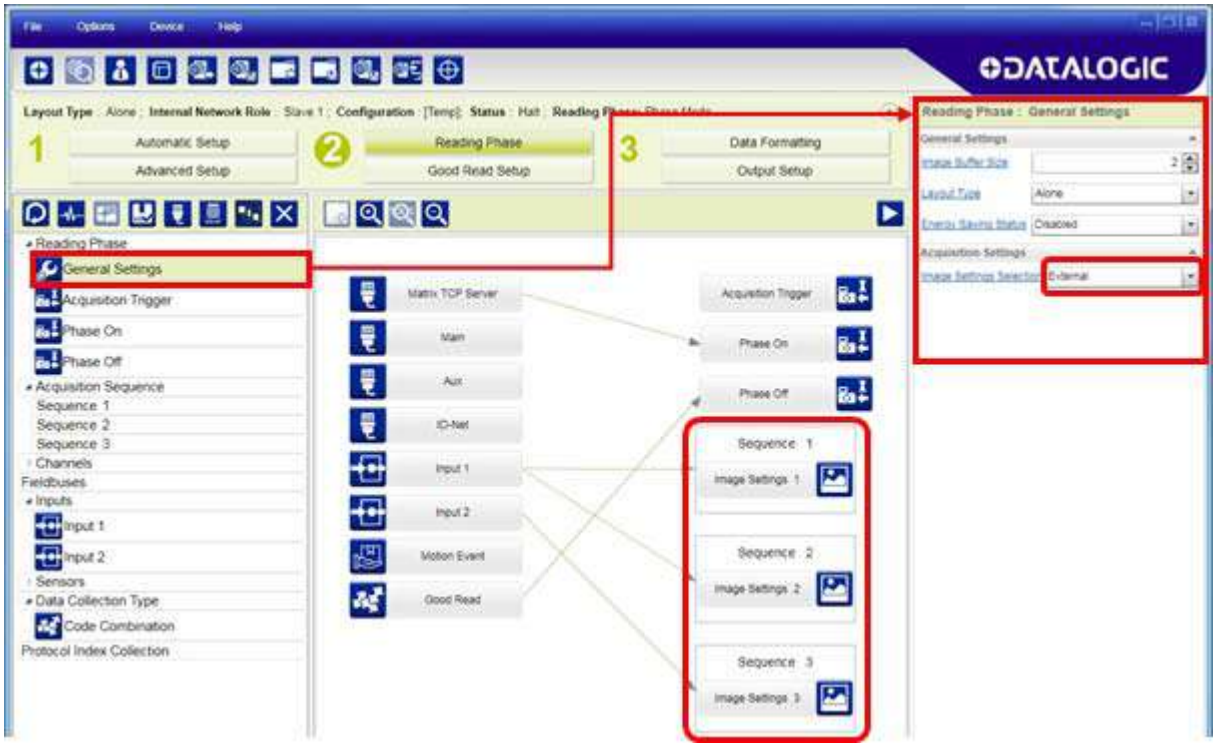

Each **Acquisition Sequence** can be activated exclusively by a single event, either through a string from an available communication channel or by a digital input.

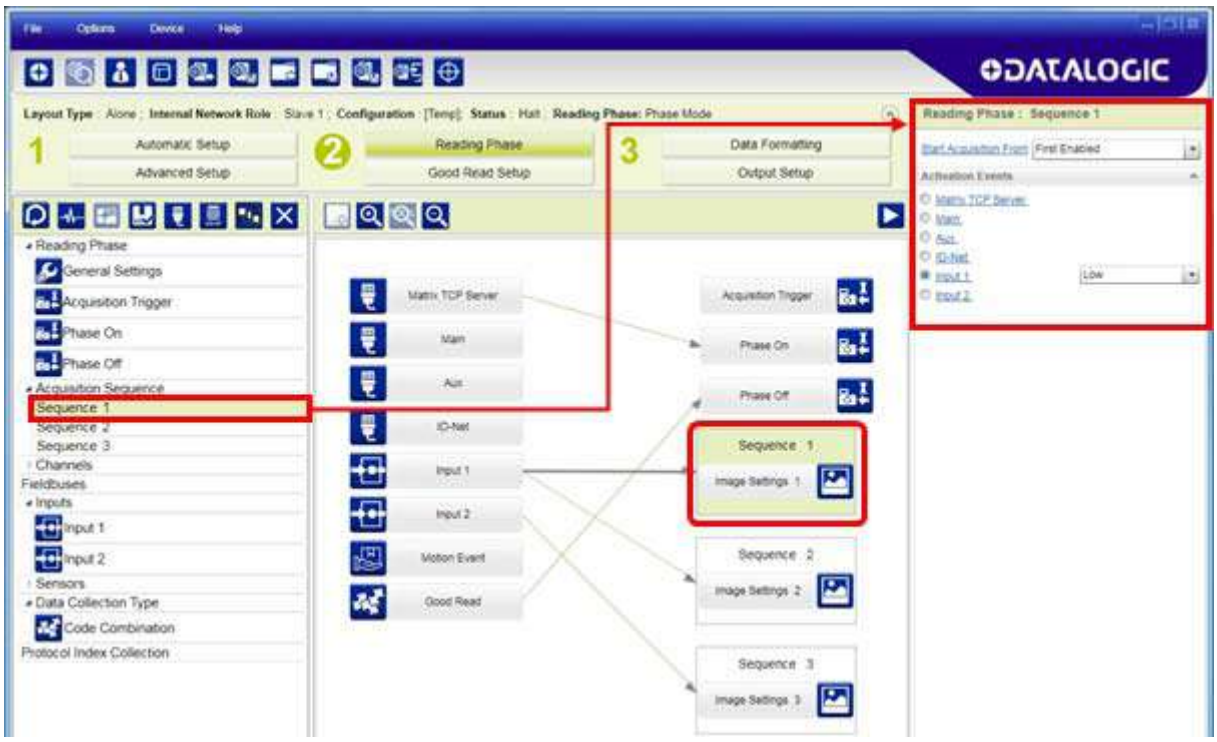

Alternatively a hybrid configuration can be made where more than one **Image Setting** can be grouped into an Acquisition Sequence by dragging it into the desired Sequence box. Select the empty Sequence box and delete it with the delete key.

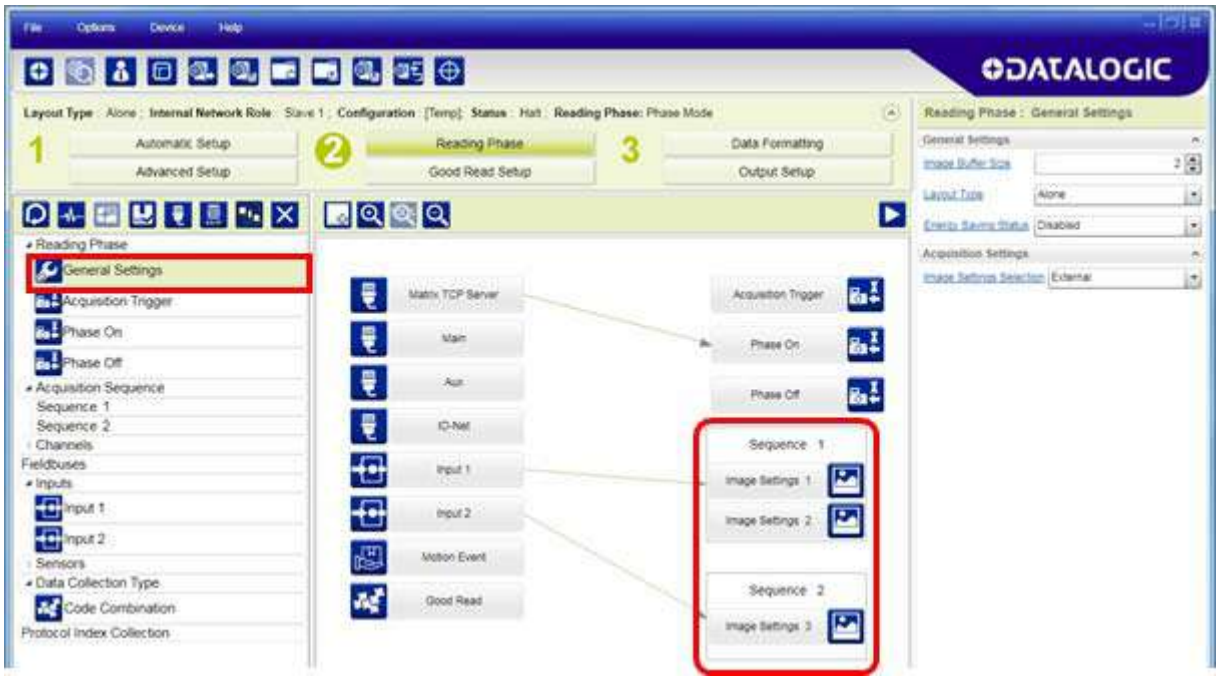

Each **Acquisition Sequence** can be activated exclusively by a single event, either through a string from an available communication channel or by a digital input.

In this case the **Start Acquisition From** parameter can improve the read rate for that Sequence. It has no meaning for a Sequence containing only one Image Setting.

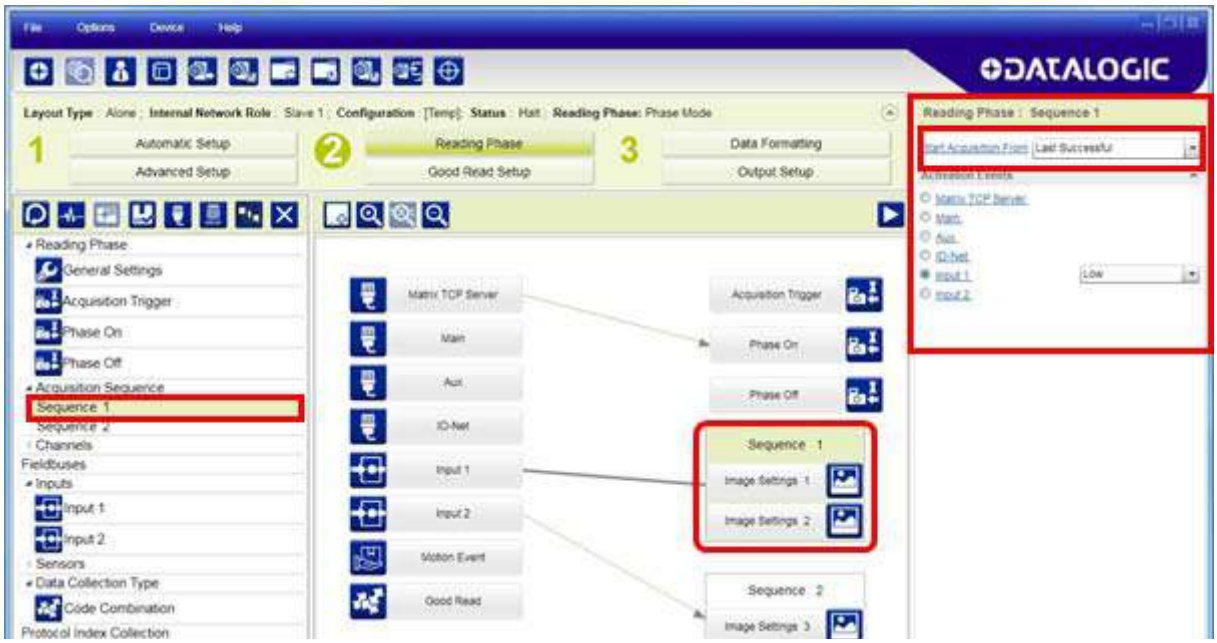

Image Cropping

In some applications, the Image Cropping feature in DL.CODE can help to increase decoding and result performance. Image cropping is performed from the Advanced Setup tab by clicking on the Add Cropping Region icon as shown below.

In Matrix 220 the frame rate is dependent on the number of rows and columns in the defined window. Image cropping allows reducing the Image processing area from the full FoV to a smaller area where codes are present. By excluding portions of the FoV, processing time is reduced.

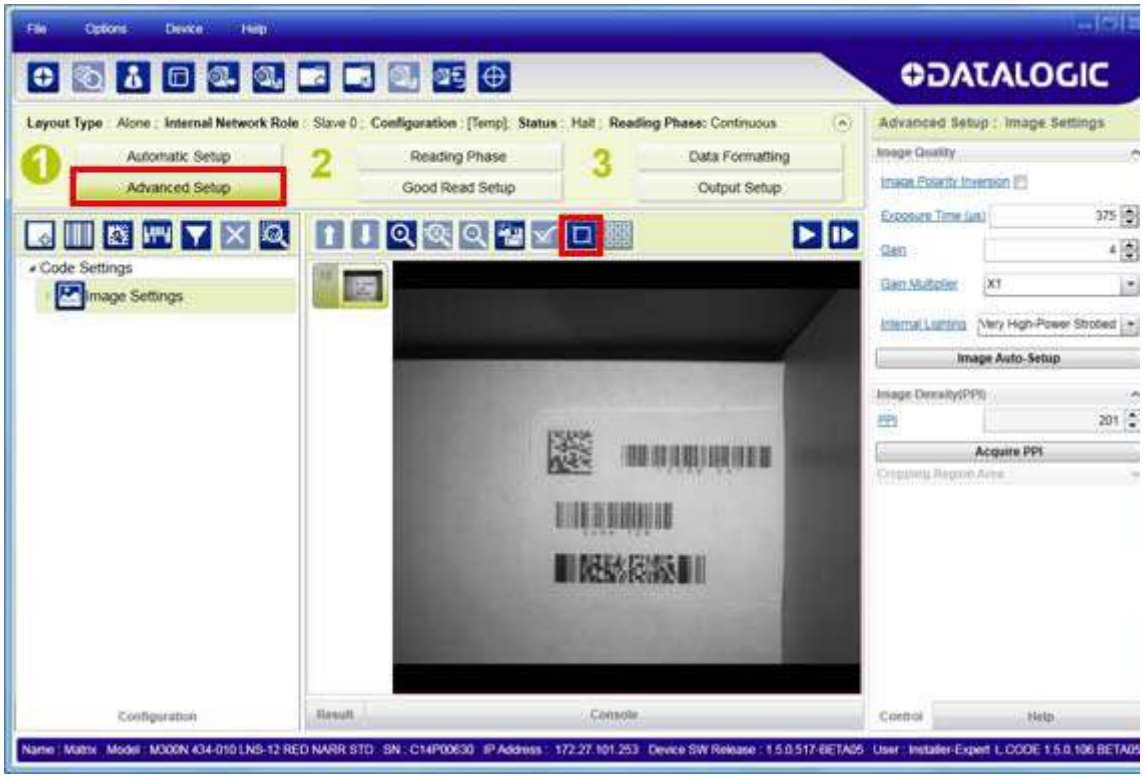

After clicking the Add Cropping Region icon, a blue border appears which by default is equal to the FoV.

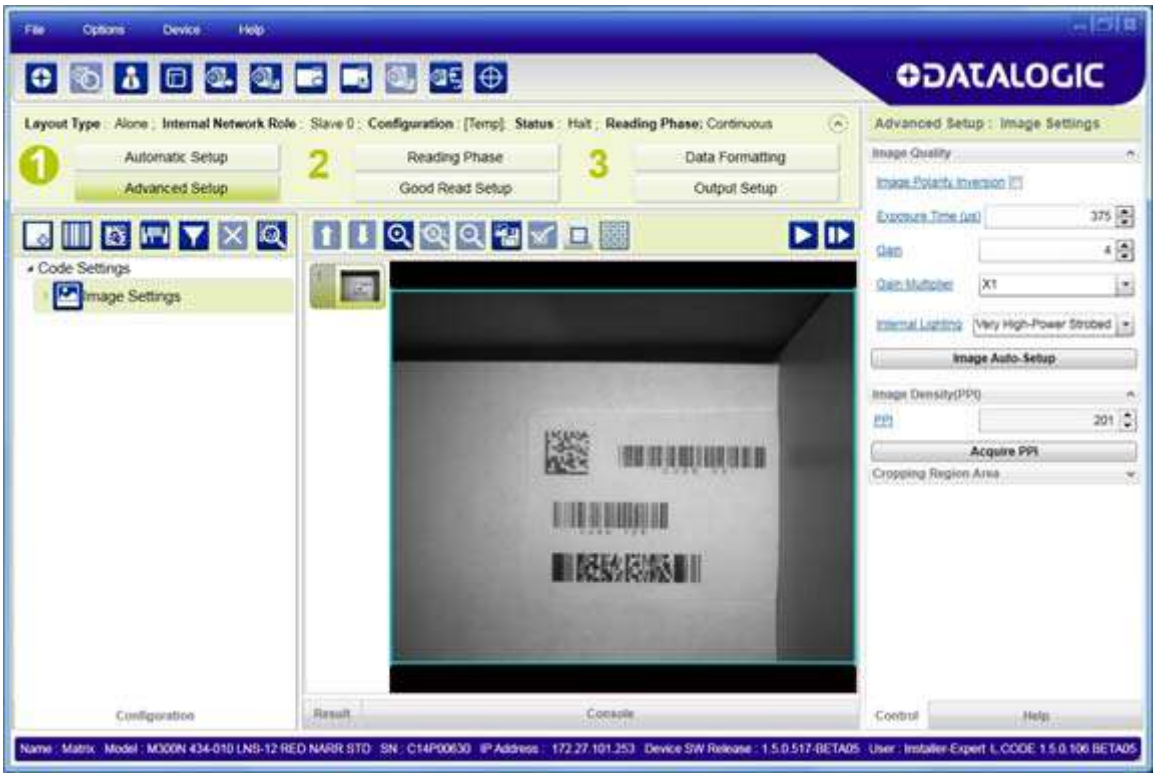

By dragging the edges with the mouse (resizing) you can crop the image to a specific location where codes are present. The numbers in the blue boxes refer to pixel references.

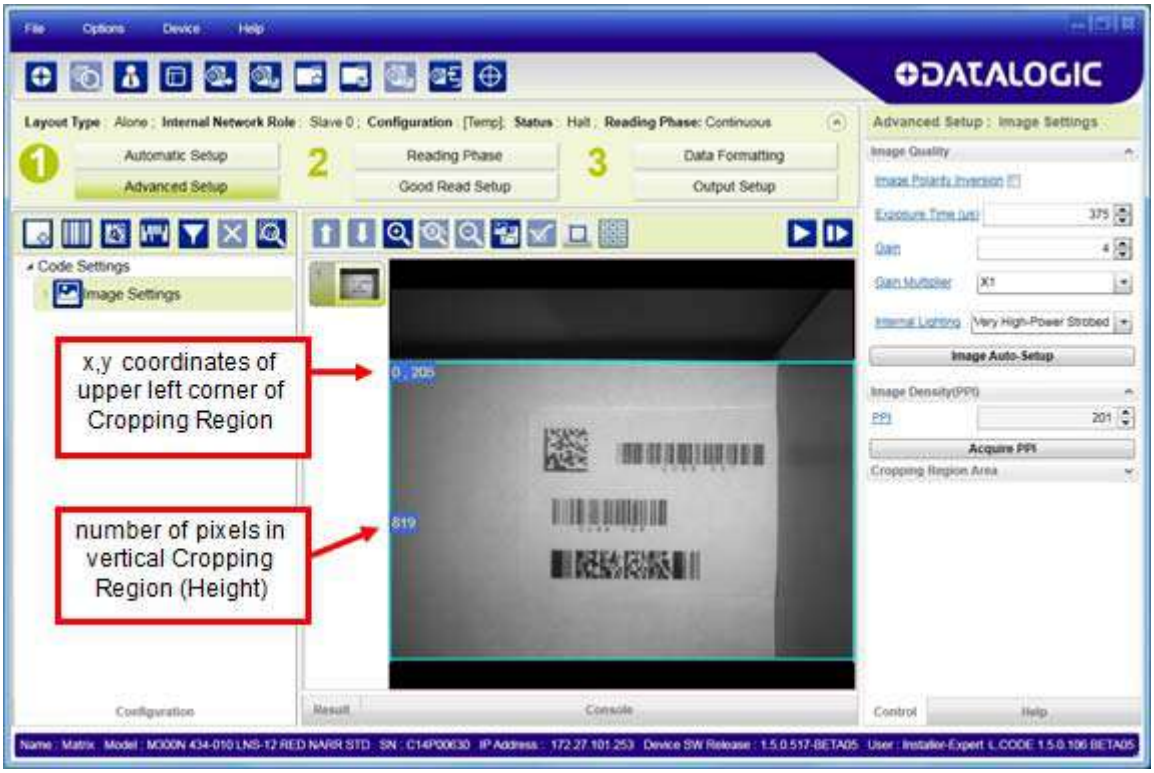

The cropped area can be moved by dragging the center.

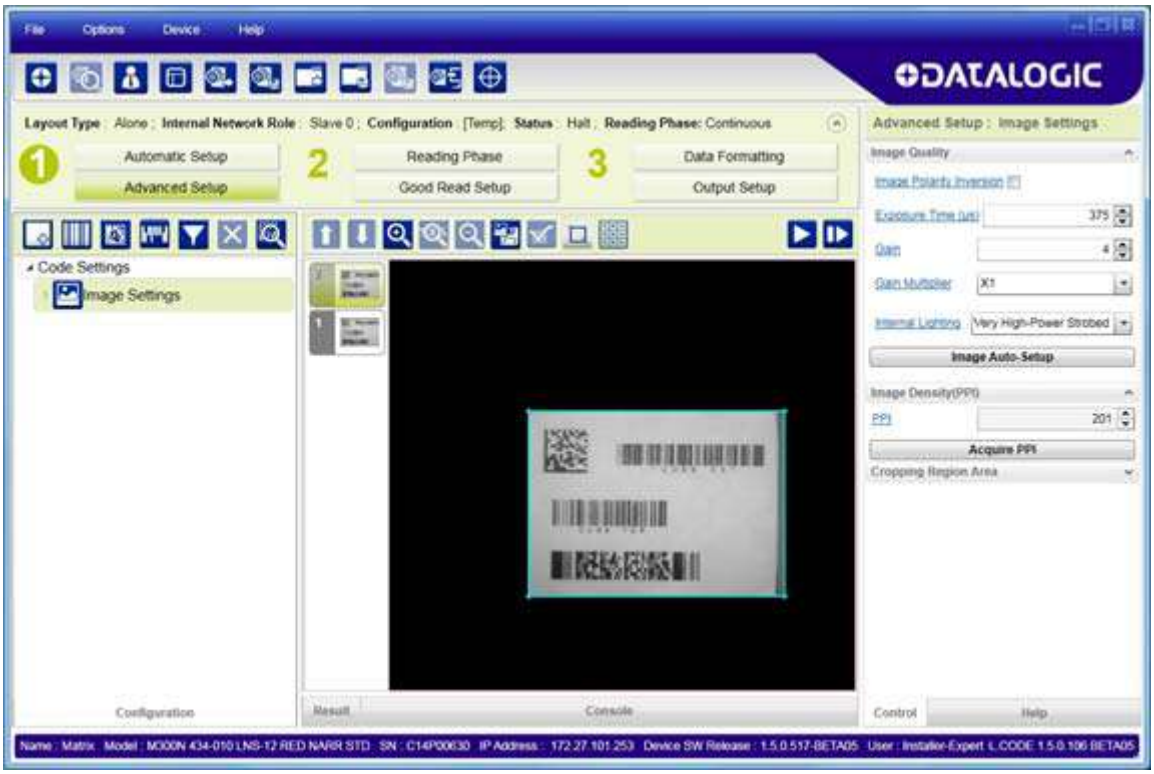

You can also set the cropped image size and position through the Cropping Region Area group of parameters; size = **Width** and **Height**, position = **Left, Top** (x,y) coordinates.

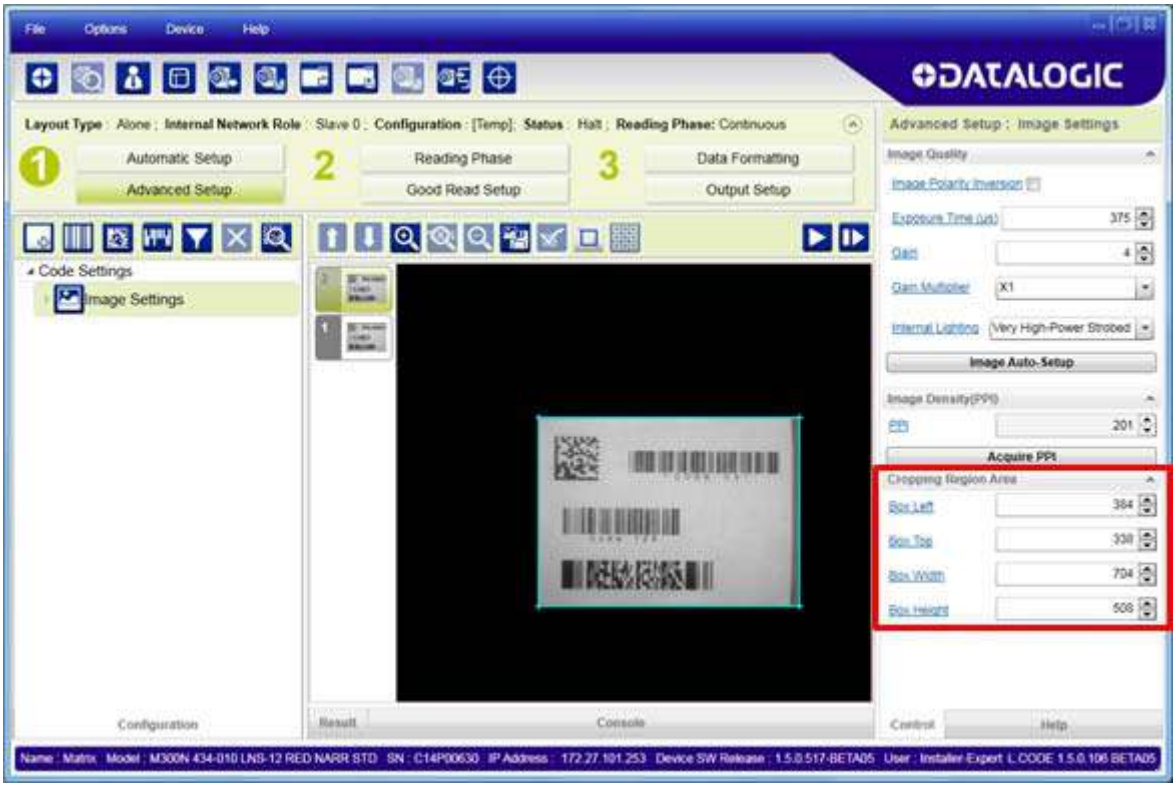

Direct Part Marking Applications

For **Data Matrix** family codes the ***Decoding Complexity*** parameter is available when Processing Mode is set to Standard and selects the decoding algorithm according to the printing/marking technique used to create the symbol and on the overall printing/marking quality.

The possible selections progress from Low to Very High where Low can improve decoding time for good print/mark quality and/or relatively normal size codes. This is the default setting. Very High can improve the decode rate for low print/mark quality and/or small size codes. This algorithm is much more aggressive but in general it may have longer decoding times than the lower complexity algorithms. **To minimize decoding time it is better to select the lowest value that still guarantees good decoding.**

Washed out and Axial Distortion

Dot Peening On Scratched Surface

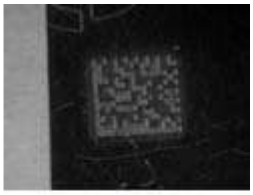

Low Contrast Problem

Background Problems

Marked On Curved Shiny Surface

Axial distortion

Half moon effects

Shiny surface, noisy background

Low contrast, noisy background

For **QR** code the ***Decoding Method*** parameter allows the Dot Peen Decoding algorithm to be selected which improves the decode rate for low quality Direct Part Mark codes and in general for Direct Part Mark codes with dot peening type module shapes.

Matrix 220 Recommended Illumination for DPM Applications

The following table lists the most suitable Matrix 220 model and relative lighting system configuration used to resolve several common DPM applications.

Models	STD STD HP	DPM DPM HP	DPM DPM HP	DPM	All
Application Characteristics	**White**	**Non Polarized**	**Polarized**	**Diffused**	**External LT-510**
Printed codes on opaque paper or labels having a flat surface	✓	✓	OK	OK	OK
Laser Etching or Ink Jet code marking on an opaque, flat surface having no evident machining flaws	✓	✓	OK	OK	OK
Code marking on an opaque, rough surface	✓	✓	OK	OK	✗
Code marking on a flat surface with evident machining flaws produced by machining tools	✗	✗	OK	✓	OK
Laser Etching or Dot Peening code marking on a flat, highly reflective surface	✗	✗	✓	✓	✗
Code marking on a curved surface	✗	✗	✗	✗	✓

Legend:

✓ Suggested Lighting System

OK Compatible Lighting System

✗ Lighting System Not Recommended

Color Contrast Considerations for DPM Applications

Matrix 220 DPM models are available in Red and Blue Light versions to help resolve applications that have colored codes and/or backgrounds.

The choice between the blue or red illuminator should be done in order to maximize the contrast between the code and its background; in general, a code illuminated with a light of the same color becomes brighter, on the other hand when illuminated with an opposite color it appears darker (see the Chromatic Circle Chart).

Consequently during the reading phase the lighting system changes the chromatic rendering of the target according to the color of the illuminator, modifying the contrast between target and background. See the examples below.

Color Photo of Codes				
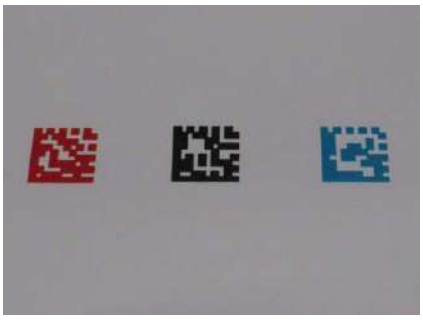				
Matrix 220 STD White Light	**Matrix 220 DPM Blue Light**		**Matrix 220 DPM Red Light**	
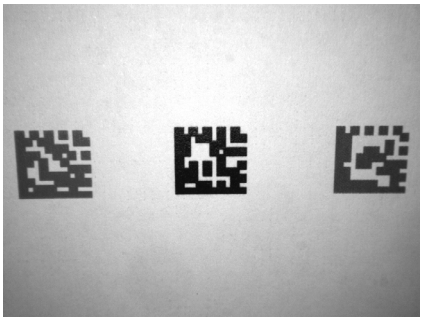	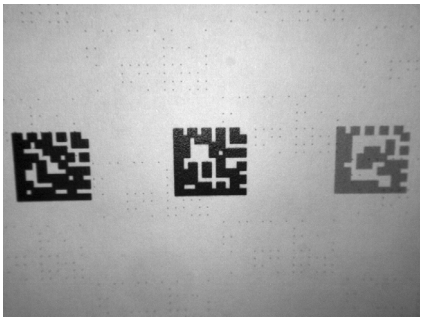		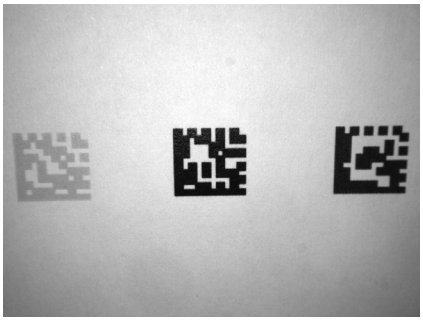	
Good contrast on all codes	Red code (left) has good contrast	Blue code (right) has low contrast	Red code (left) has very low contrast	Blue code (right) has good contrast

Models	STD	DPM	DPM
Illumination Color	**White**	**Blue**	**Red**
Mixed color codes/background	✓	✗	✗
Red-printed code on light background White-printed code on red background	OK	✓	✗
Red-printed code on dark background Black-printed code on red background	OK	✗	✓
Blue-printed code on light background White-printed code on blue background	OK	✗	✓
Blue-printed code on dark background Black-printed code on blue background	OK	✓	✗

Legend:

✓ Suggested Lighting System

OK Compatible Lighting System

✗ Lighting System Not Recommended

Illumination Examples for DPM Applications

The following images have been captured by a Matrix 220 DPM model reader to demonstrate positioning and contrast considerations for DPM applications.

Code Positioning with Respect to Illumination

Since the various internal illuminators on the DPM models are located above or below the sensor, the light emitted from them can cause glare in the respective area of the image. If this glare covers the code, the reader will not be able to see it and therefore cannot decode it (see the first image in the table below).

Application Characteristics	Non Polarized	Polarized	Diffused
Reading a Data Matrix code etched on a metal surface (can lid) Code at FoV center	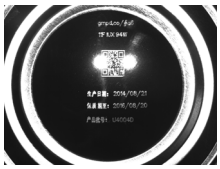 No Read	 OK	 OK
Reading a Data Matrix code etched on a metal surface (can lid) Code at FoV top	 OK	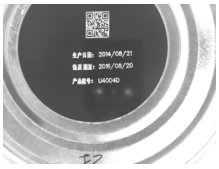 OK	 OK
Reading a Data Matrix code etched on a metal surface (can lid) Code at FoV bottom	 OK	 OK	 OK
Reading a Data Matrix code etched on a metal surface (can lid) Code at FoV right	 OK	 OK	 OK
Reading a Data Matrix code etched on a metal surface (can lid) Code at FoV left	 OK	 OK	 OK

Code Contrast

In the images below, the contrast of the code with respect to the surface material is sufficient to overcome the glare of the Non Polarized and Diffused illuminators. However, for the Polarized illuminator the contrast is not sufficient no matter what the position in the FoV.

Application Characteristics	Non Polarized Illuminator
Reading a Data Matrix code etched on a metal surface (fuse) OK	

Application Characteristics	Polarized Illuminator
Reading a Data Matrix code etched on a metal surface (fuse) No Read	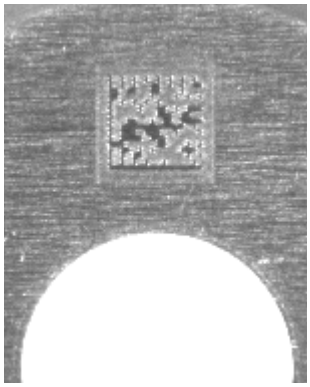

Application Characteristics	Diffused Illuminators
Reading a Data Matrix code etched on a metal surface (fuse) OK	

Image Filter

Sets the filter to be applied to the image before being processed. This parameter can be used to successfully decode direct part mark codes.

Different filters can be applied to a single code or group of codes in one or more ***Image Settings***. See the DL.CODE User's Manual for examples of Image Filter application.

The ***Erode*** Filter enlarges the image dark zones to increase readability.	
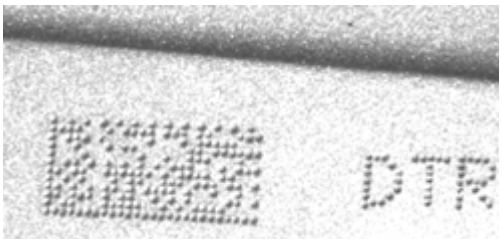	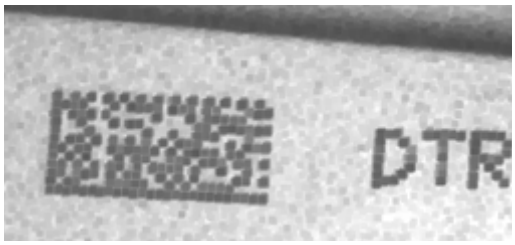
Before - No Read	After - Readable

The ***Dilate*** Filter enlarges the image white zones to increase readability.	
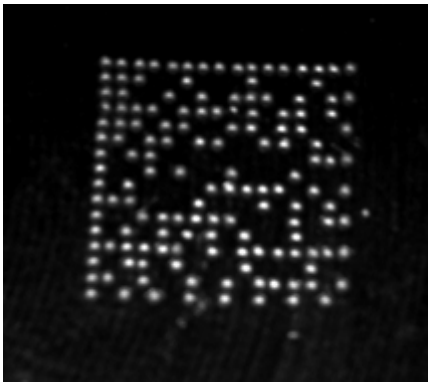	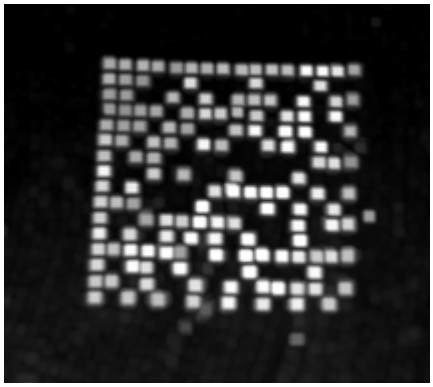
Before - No Read	After - Readable

The *Close* filter eliminates dark areas (defects) in the white zones of the image.	
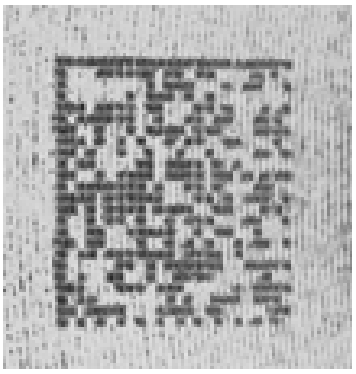	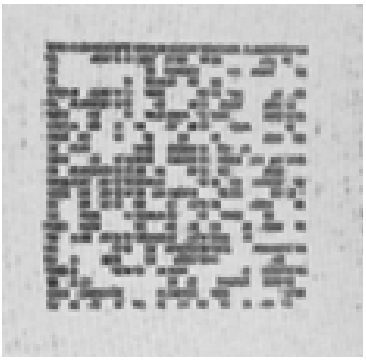
Before - No Read	After - Readable

The *Open* filter eliminates white areas (defects) in the dark zones of the image.	
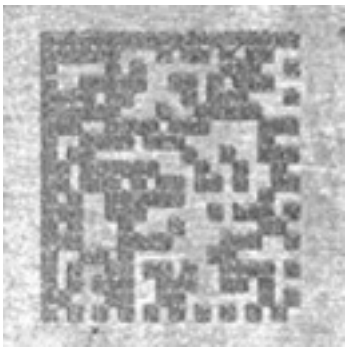	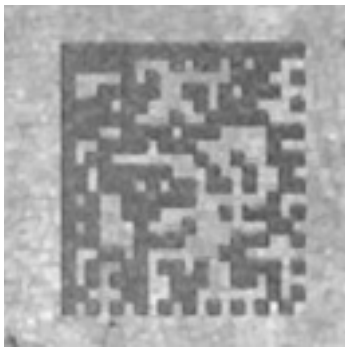
Before - No Read	After - Readable

The *Contrast Stretching* filter maximizes image contrast.	
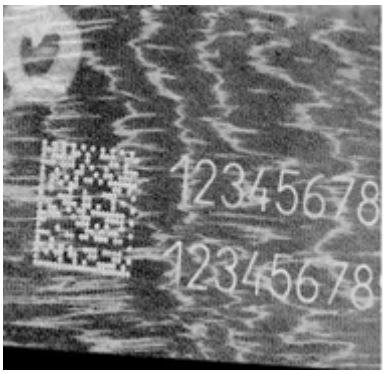	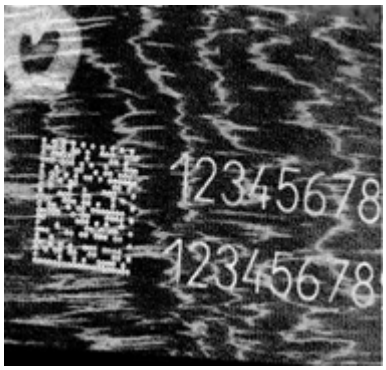
Before - No Read	After - Readable

The *Contrast Stretching* filter maximizes image contrast.	
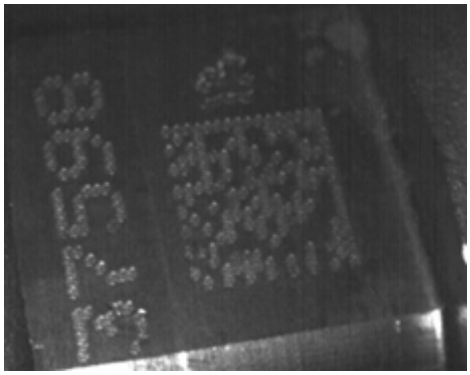	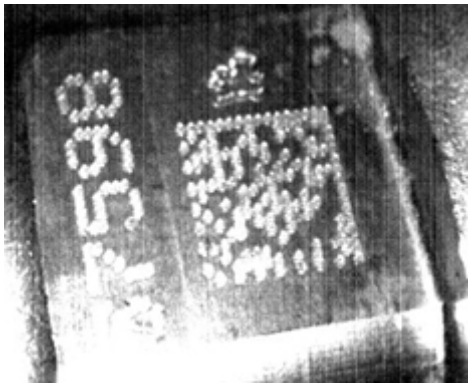
Before - No Read	After - Readable

The *Histogram Equalization* filter makes the gray level distribution uniform.	
Before - No Read	After - Readable

The *Smoothing* filter deletes small (insignificant) details in the center of the image.	
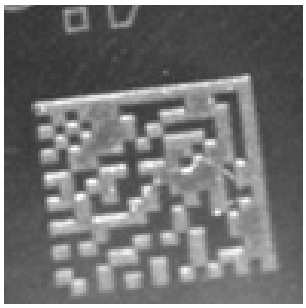	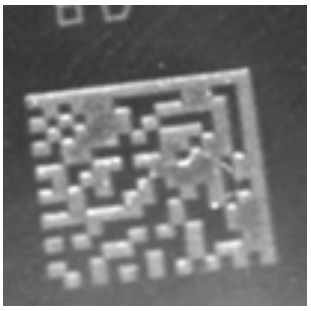
Before - No Read	After - Readable

The *Sharpening* filter improves out of focus images.	
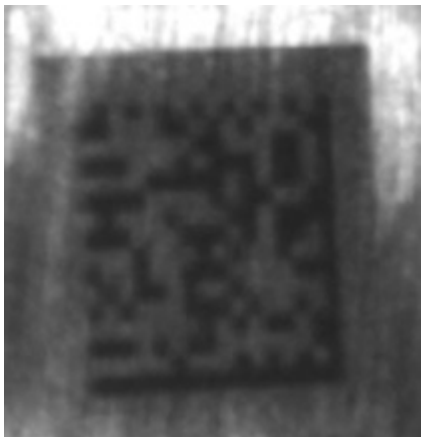	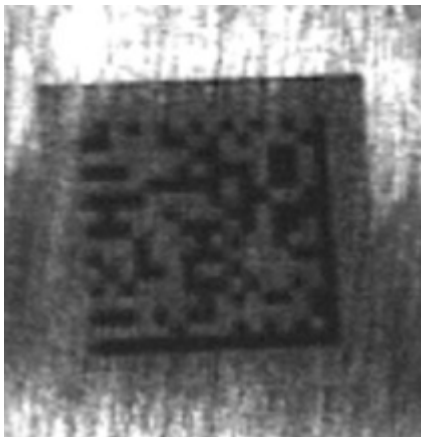
Before - No Read	After - Readable

The *Deblurring* filter improves blurred images.	
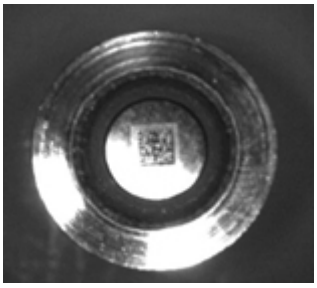	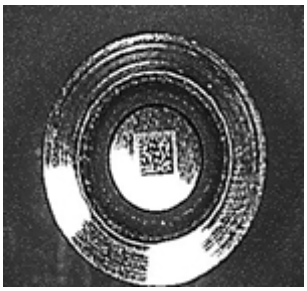
Before - No Read	After - Readable

The *Deblurring* filter improves blurred images.	
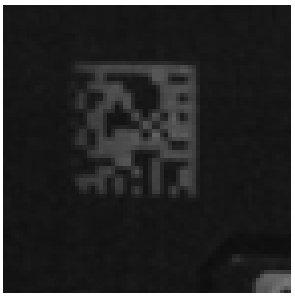	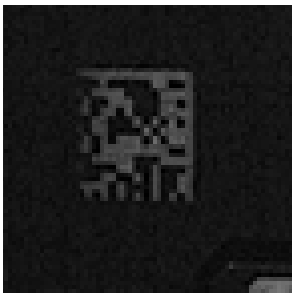
Before - No Read	After - Readable

The *Black Enhancement* filter produces a nonlinear increase in the black level for light images.	
Before - No Read	After - Readable

The *White Enhancement* filter produces a nonlinear increase in the white level for dark images.	
Before - No Read	After - Readable

Pass-Through Configurations

DL.CODE and Matrix 220 readers support pass-through multi device configurations.

The pass-through configuration allows individually working devices (Alone), to collect data from other devices (also working Alone), and pass this data to a third device through a different communication channel.

The following screenshots show the pass-through configuration settings for the three devices in the example in "Pass-Through" on page 95.

Layout Type : Alone
Internal Network Role : Slave 0 ; Configuration : Station 1; Status : Halt ; Reading Phase: Phas
Reader #1
Reading Phase
Good Read Setup
Data Formatting
Output Setup
Data Formatting : Passthrough
Header
<STX>
Terminator
<CR><LF>
Passthrough Input Data
Input Channel
Matrix TCP Server 2
Passthrough Content Field
Output Channels
Matrix TCP Server 1
Matrix TCP Server 2
Main
Aux
Output Data Format
Output Messages
Message 1
Message 2
Diagnostic Messages
Channels
Fieldbuses
Images Saving Conditions
Passthrough Configuration
Passthrough
Passthrough Field
Output Data Channels
Good Read
Message1
No Read
Message2
Passthrough

Layout Type : Alone
Internal Network Role : Slave 0 ; Configuration : Station 2; Status : Halt ; Reading Phase: Phas
Reader #2
Reading Phase
Good Read Setup
Data Formatting
Output Setup
Data Formatting : Passthrough 2
Header
<STX>
Terminator
<CR><LF>
Passthrough Input Data
Input Channel
Aux
Passthrough Content Field
Output Channels
Matrix TCP Server 1
Matrix TCP Server 2
Main
Aux
Output Data Format
Output Messages
Message 1
Message 2
Diagnostic Messages
Channels
Fieldbuses
Images Saving Conditions
Passthrough Configuration
Passthrough 1
Passthrough 2 Field
Output Data Channels
Good Read
Message1
No Read
Message2
Passthrough1

Layout Type : Alone
Internal Network Role : Slave 0 ; Configuration : Station 3; Status : Halt ; Reading Phase: Conti
Reader #3
Reading Phase
Good Read Setup
Data Formatting
Output Setup
Data Formatting : Message 1
Header
<STX>
Terminator
<CR><LF>
Code Related Field
Output Channels
Matrix TCP Server 1
Matrix TCP Server 2
Main
Aux
Event Type
Output Data Format
Output Messages
Message 1
Message 2
Diagnostic Messages
Channels
Fieldbuses
Images Saving Conditions
Passthrough Configuration
Message 1 Field
Expected Code 1
Output Data Channels
Good Read
Message1
No Read
Message2

Internal Network Configurations

Internal Network configurations (also called Master/Slave configurations), are designed to collect data from several devices connected together in an ID-NET™ network and send data output to the Host system.

DL.CODE has a Net Autoset feature for the Internal ID-NET Network which automatically recognizes and assigns addresses to all connected Slave readers.

In order to automatically recognize the ID-NET Slaves, all devices must be physically installed and electrically connected (including ID-NET network wiring).

The general procedure (also detailed in the following paragraphs) is to:

1. Mount all the readers mechanically (refer to "Mechanical Dimensions" on page 53 and "Mounting And Positioning Matrix 220" on page 58) and electrically (refer to "ID-NET Interface" on page 72) with factory default settings (Layout Type = Alone, Internal Network Role = Slave).
2. Run DL.CODE and verify that all the devices are discovered and shown in the device list area.
3. Connect to the designated Master device in DL.CODE and open the **Setup Internal Network Configuration**. You will be prompted to change the device to Master. Click OK. The Slave units will automatically be recognized. See "Master Configuration" on page 139.
4. Depending on the application, select Set Default Multidata Configuration or Set Default Synchronized Phase Mode Configuration.
5. Connect to each Slave reader via Ethernet and set the Slave specific parameters depending on the application type. Save each Slave specific configuration. See "Multidata ID-NET Network Configurations" on page 142 or "Synchronized ID-NET Network Configurations" on page 147.
6. For Synchronized networks Verify/Test network performance. See "Verify Master/Slave Synchronized Configuration" on page 151.
7. Perform the **Backup current Internal Network configurations** procedure. See "Backup" on page 155.

Master Configuration

First start with the desired device to assign as ID-NET Master (current default setting is Slave). Click on Setup Internal Network Configuration from the Task area.

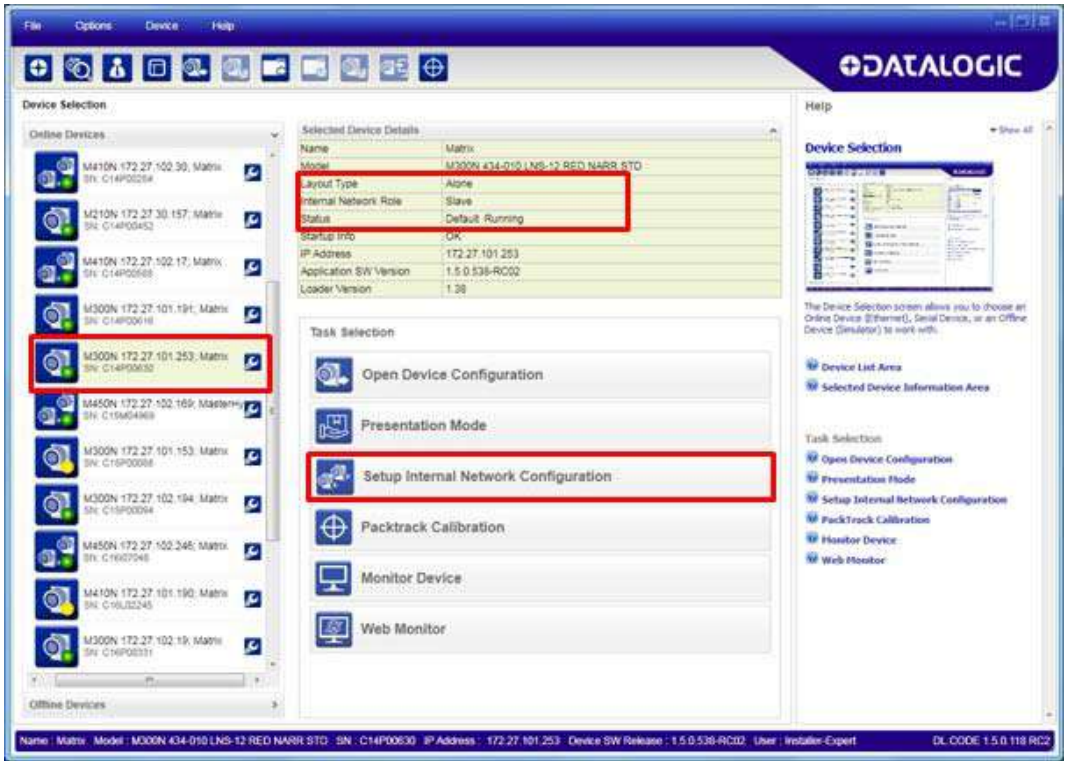

You will be advised that the device role will be changed to Master.

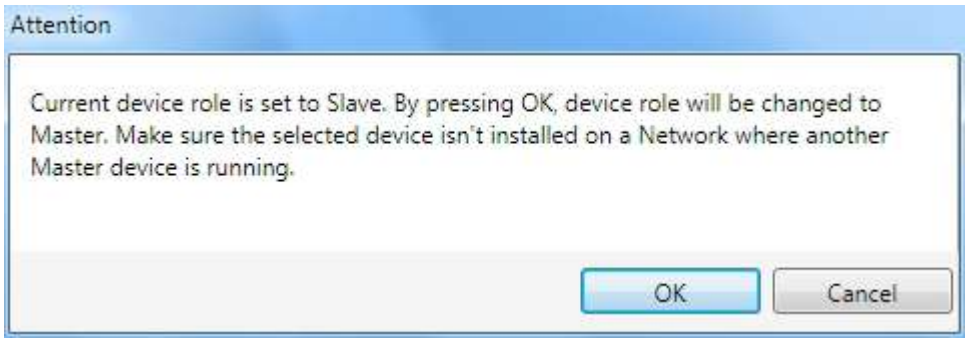

Click OK. The Net Autoset feature automatically starts to find Slave devices connected to the ID-NET network of the Master.

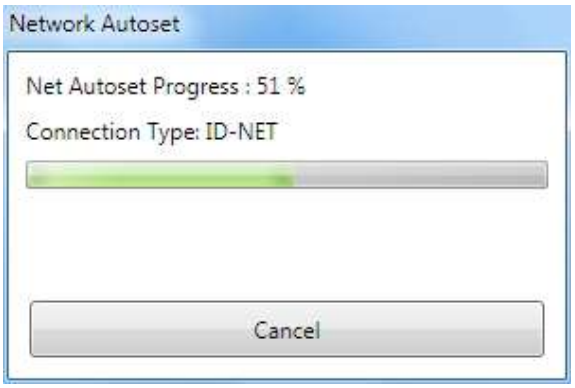

When finished, all the Slaves should have been correctly recognized. If not, verify all device connections and power and then repeat the operation by clicking on the Start Net Autoset button.

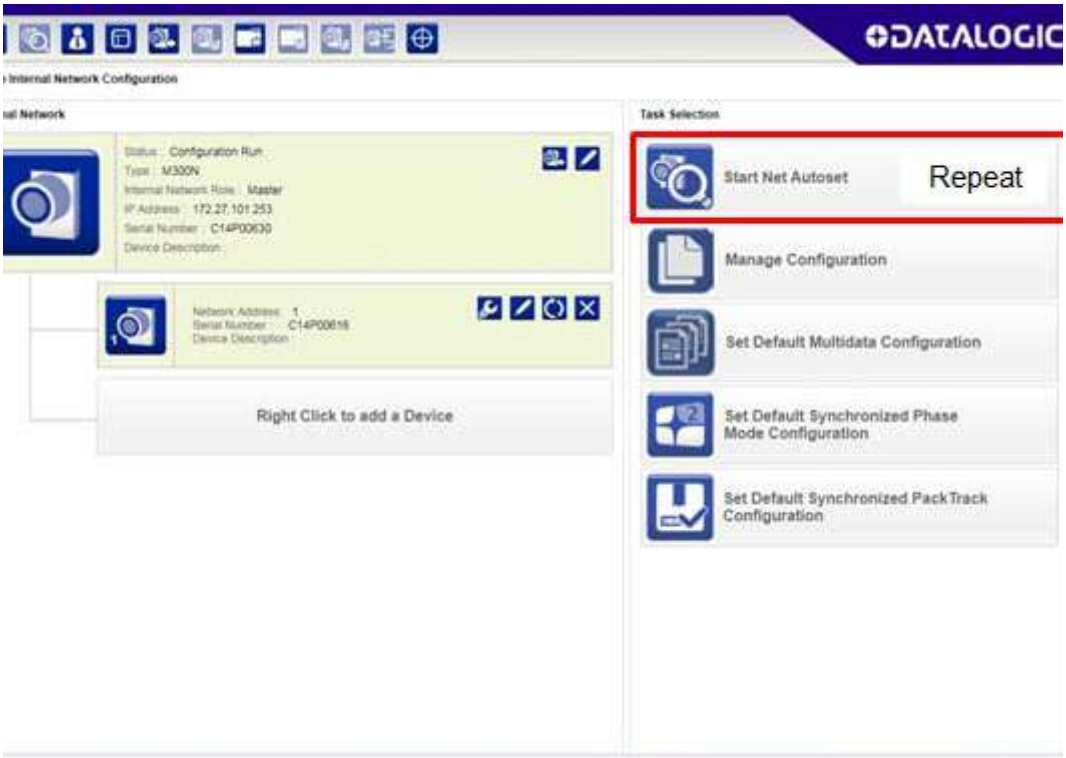

Depending on the application, select one of the Default Internal Network Configurations: **Multidata**, **Synchronized Phase Mode** or **Synchronized PackTrack**.

This selection will open a pre-configured job for the Master reader according to the selection. Follow the specific application instructions in the following paragraphs.

Multidata ID-NET Network Configurations

The Multidata ID-NET network communications between Master and Slave are managed by the application job (configuration) using the pass-through feature. A pre-configured job is loaded with the correct pass-through settings for both the Master and Slaves when the Default Multidata Configuration is selected from the Internal Network Setting feature.

1. Complete the configuration of all the application parameters (including Image Settings) and save them to the Master with an application specific name.

   Optionally, checking the **Save on Slave Device** box can be helpful to save all the current individual Slave configurations with the new configuration *name*. This does not clone any parameters. If not checked, Slave configurations will remain as *Temp* configurations and you will be warned that changes to the Master have not been saved to the Cluster.

   For Multidata configurations, the option to **Clone Master configuration on Slaves** **must not be checked**.

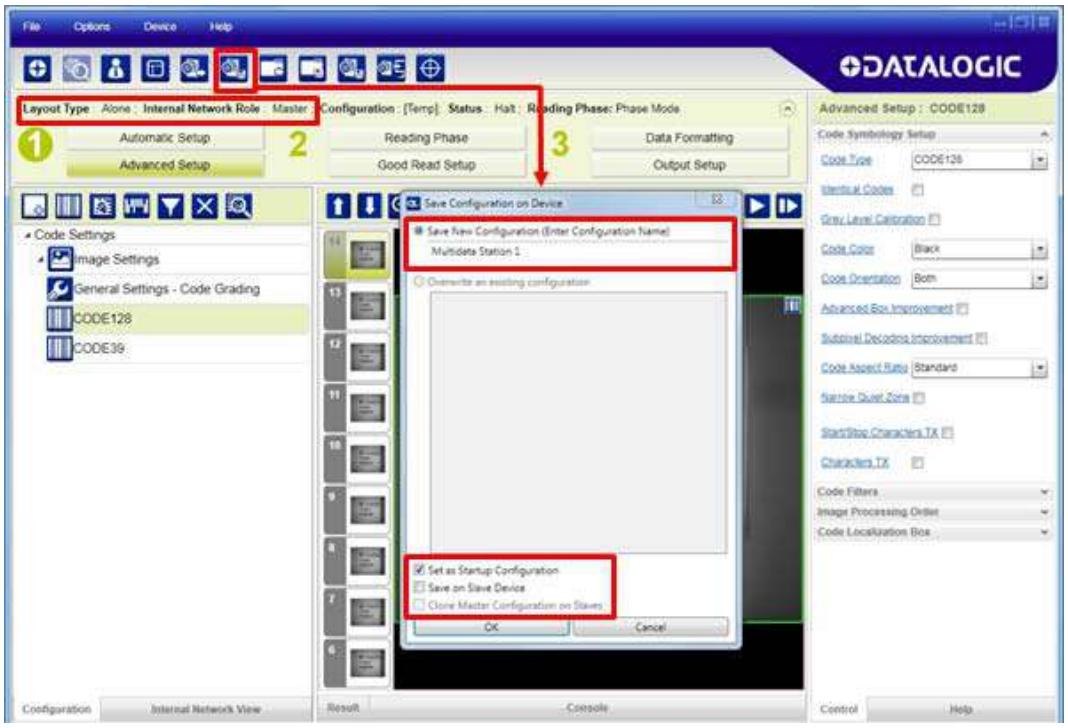

Figure 93 – Saving Multidata Configuration to Master

The jobs must not be cloned because the Master and Slaves have different input/output communication channels. The readers are also working independently from each other, often on separate stations with different code reading requirements, different operating modes, etc.

2. Connect to each Slave reader via Ethernet (see note below), and set all the configuration parameters of each Slave device.

NOTE

If necessary, Slave device photometric (Image Settings) parameters must be configured separately through DL.CODE. This is preferably done through each device's Ethernet TCP/IP channel. If Slave devices are not connected to Ethernet you must temporarily (manually) connect them one by one to perform Image Settings.

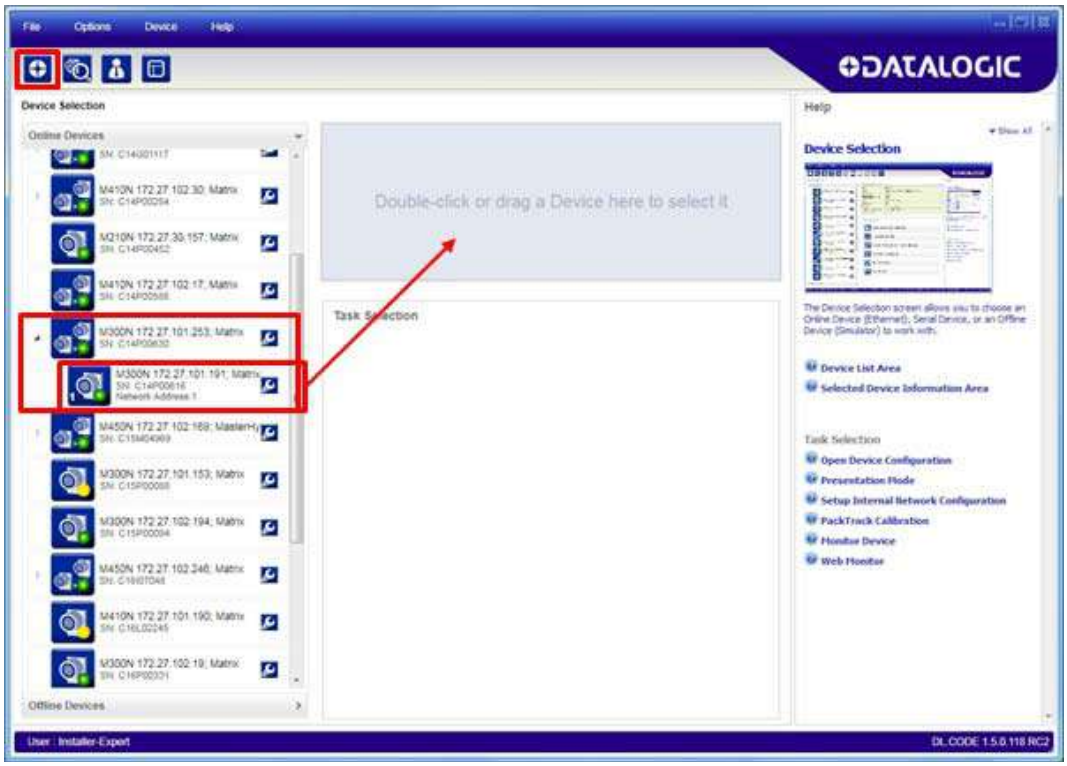

Open the Slave specific application job, (it will either have the new name saved from the Master or Temp depending on the **Save on Slave Device** selection).

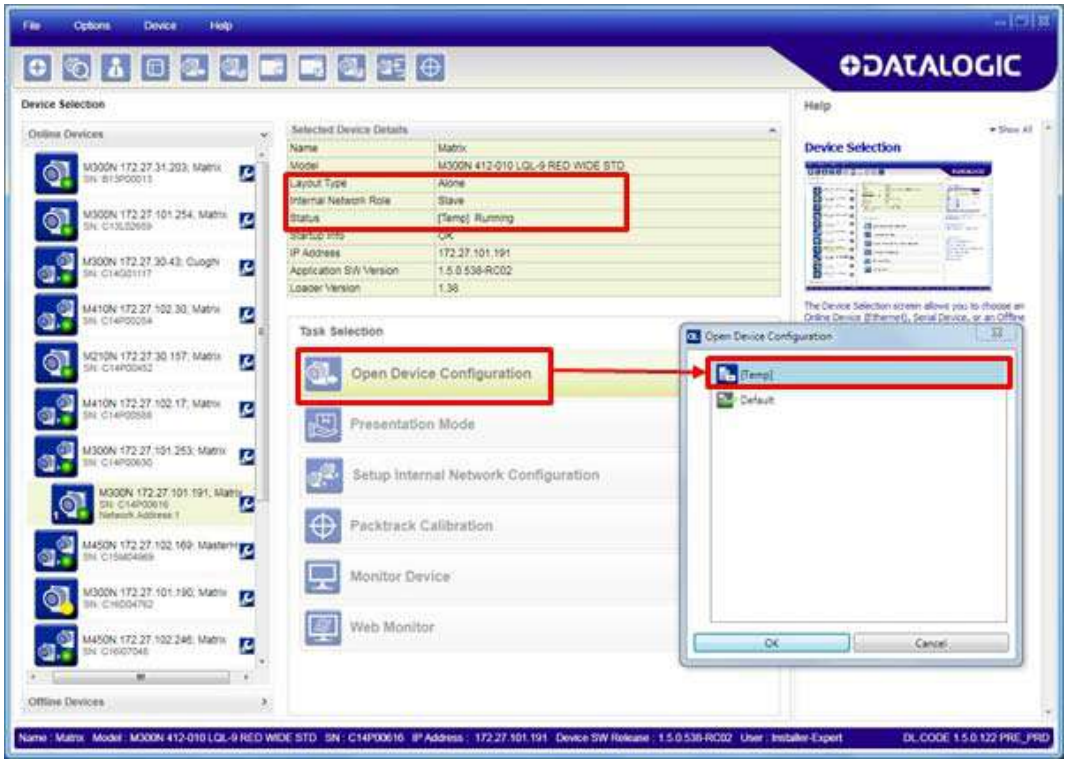

When the configuration opens, pause run mode and set all the application specific configuration parameters (including Image Settings).

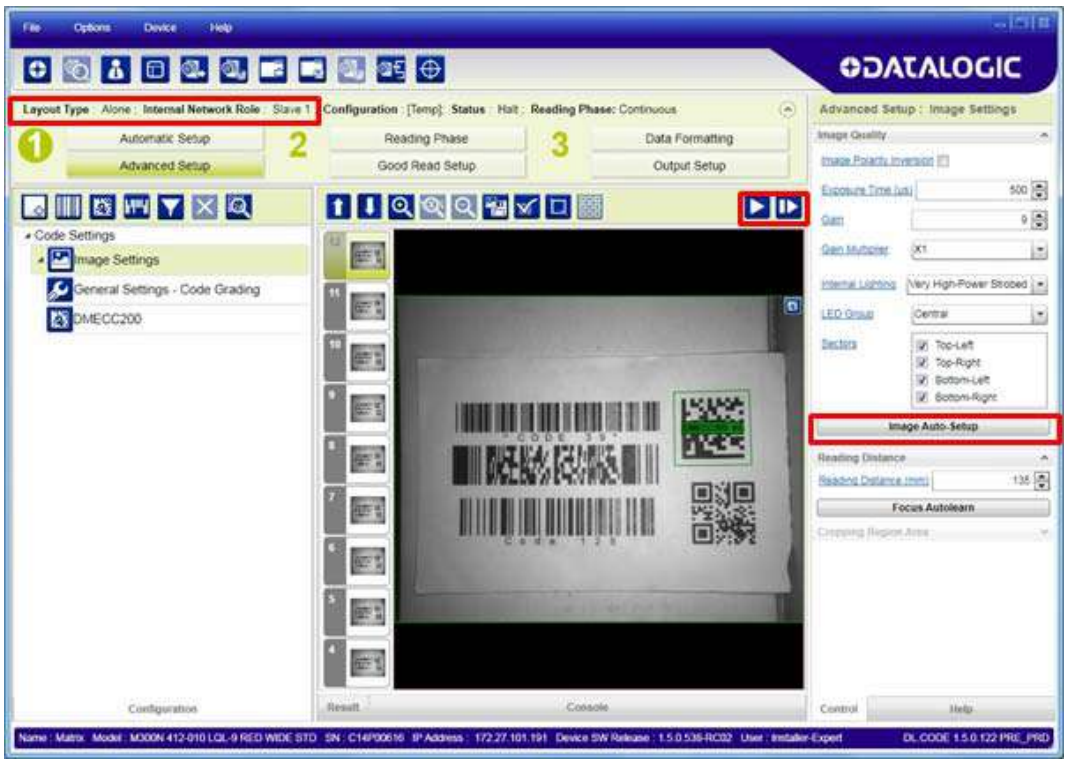

Verify the focus and decoding with the capture image button.

3. Now save them to a new Slave specific application job[1].

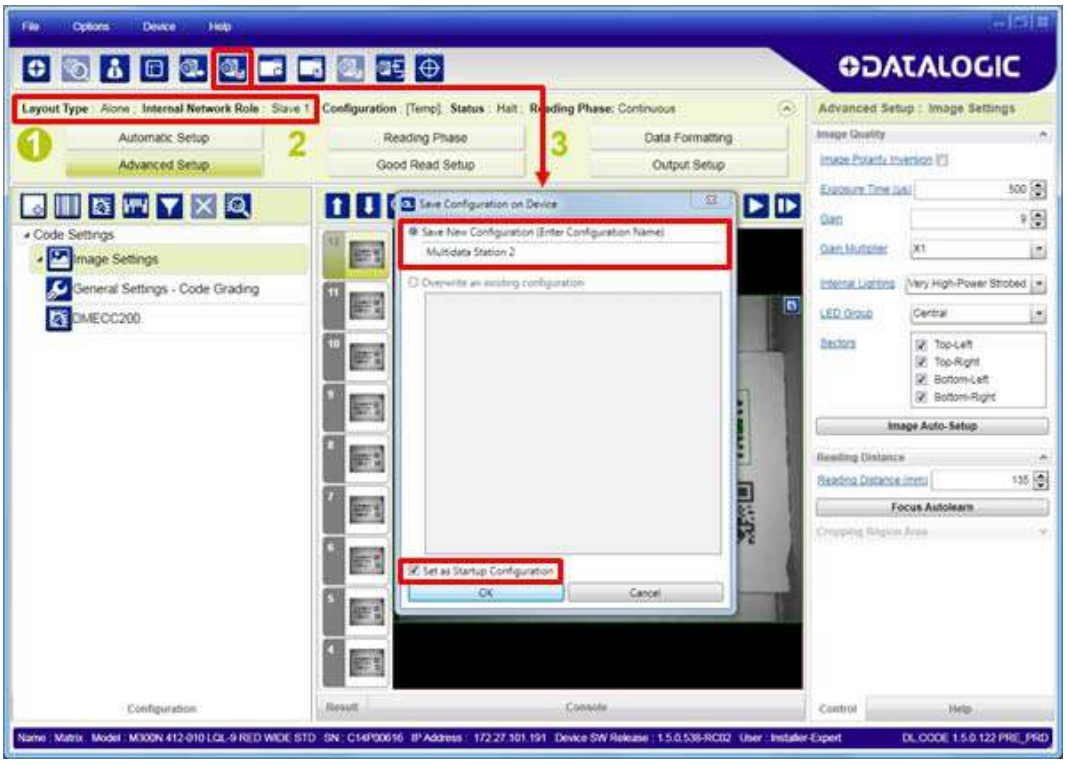

Figure 94 – Saving Multidata Configuration to Slave 1

Repeat this procedure for each Slave device until the entire network is configured.

The following screenshots show the pass-through configuration settings for the three devices in the example in par.

1. If **Save on Slave Device** was selected when saving the Master configuration, an application job with the same name (but with all Slave specific configuration parameters), has been saved to the Slaves. No parameters have been cloned from the Master. There are no common parameters managed by the Master for Multidata configurations.

Layout Type : Alone ; Internal Network Role : Master
Configuration : [Temp]; Status : Halt ; Reading Phase: Phase
ID-NET Master
Reading Phase
Good Read Setup
Data Formatting
Output Setup
Data Formatting : Passthrough 2
Output Data Format
Output Messages
Message 1
Message 2
Diagnostic Messages
Channels
Matrix TCP Server
Main
Aux
ID-Net
Fieldbuses
Images Saving Conditions
Passthrough Configuration
Passthrough 1
Passthrough 2
Passthrough 2 Field
Output Data Channels
Good Read
Message1
No Read
Message2
Passthrough1
Passthrough2
Header
Terminator
Passthrough Input Data
Input Channel
Passthrough Content Field
Output Channels

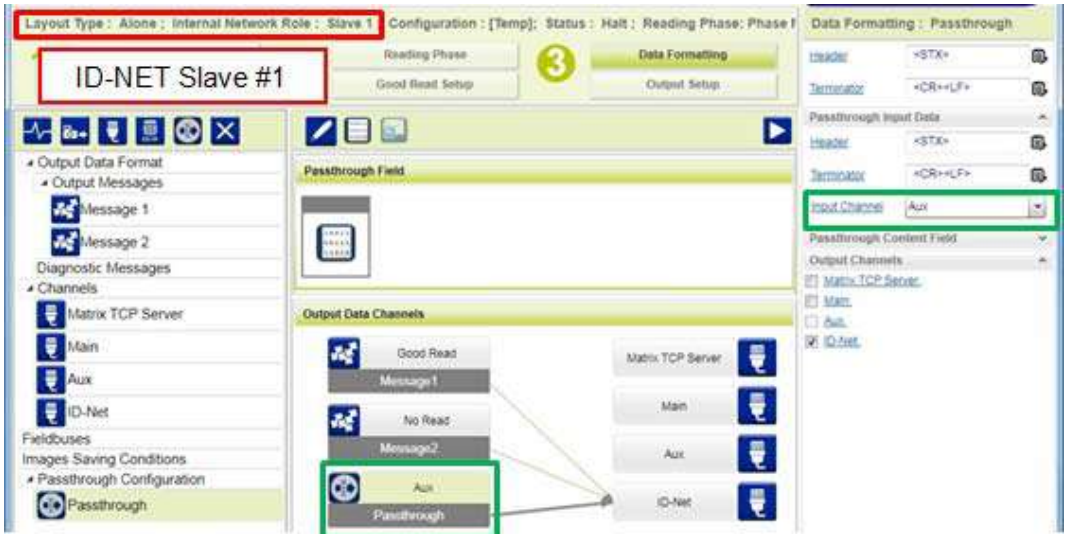
Layout Type : Alone ; Internal Network Role : Slave 1
Configuration : [Temp]; Status : Halt ; Reading Phase: Phase
ID-NET Slave #1
Reading Phase
Good Read Setup
Data Formatting
Output Setup
Data Formatting : Passthrough
Output Data Format
Output Messages
Message 1
Message 2
Diagnostic Messages
Channels
Matrix TCP Server
Main
Aux
ID-Net
Fieldbuses
Images Saving Conditions
Passthrough Configuration
Passthrough
Passthrough Field
Output Data Channels
Good Read
Message1
No Read
Message2
Header
Terminator
Passthrough Input Data
Input Channel
Passthrough Content Field
Output Channels

Layout Type : Alone ; Internal Network Role : Slave 2
Configuration : [Temp]; Status : Halt ; Reading Phase: Contin
ID-NET Slave #2
Reading Phase
Good Read Setup
Data Formatting
Output Setup
Data Formatting : Message 1
Output Data Format
Output Messages
Message 1
Message 2
Diagnostic Messages
Channels
Fieldbuses
Images Saving Conditions
Passthrough Configuration
Message 1 Field
Output Data Channels
Good Read
Message1
No Read
Message2
Header
Terminator
Code Related Field
Output Channels
Event Type

Synchronized ID-NET Network Configurations

The Synchronized ID-NET network communications between Master and Slave are internally managed by the application software. A pre-configured job is loaded with the Synchronized Layout Type and the correct Operating Mode for both the Master and Slaves when either the Phase Mode or PackTrack Configuration is selected from the Internal Network Setting feature.

1. Complete the configuration of all the application parameters (including Image Settings) and save them to the Master with an application relative name and **with** the option to **Clone Master configuration on Slaves**.

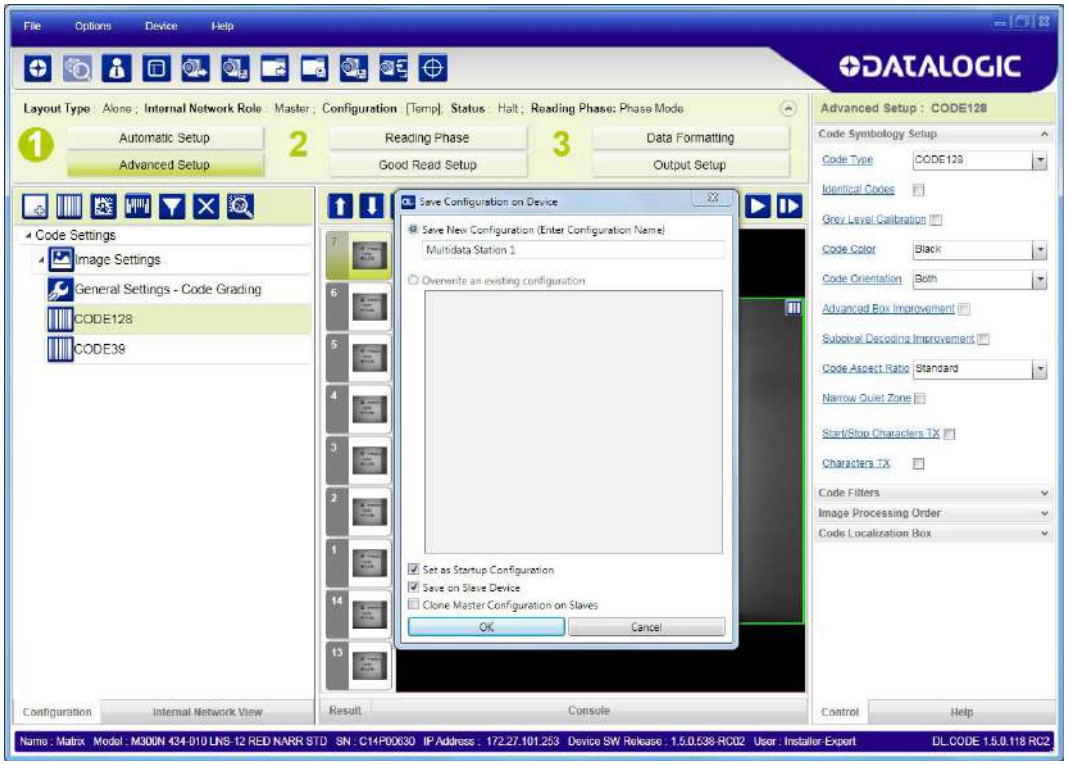

Figure 95 – Saving Synchronized Phase Mode Configuration to Master

2. Connect to each Slave reader via Ethernet (see note below), and set the Slave specific parameters.

NOTE

If necessary, Slave device photometric (Image Settings) parameters must be configured separately through DL.CODE. This is preferably done through each device's Ethernet TCP/IP channel. If Slave devices are not connected to Ethernet you must temporarily (manually) connect them one by one to perform Image Settings.

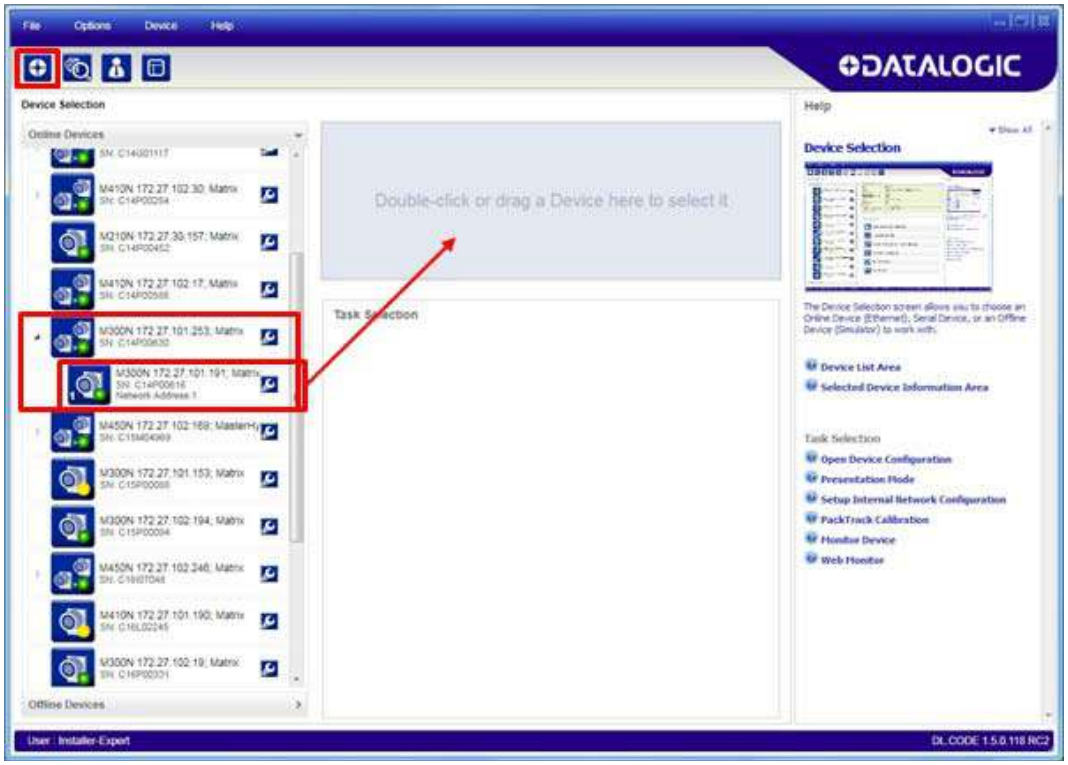

Open the cloned application job.

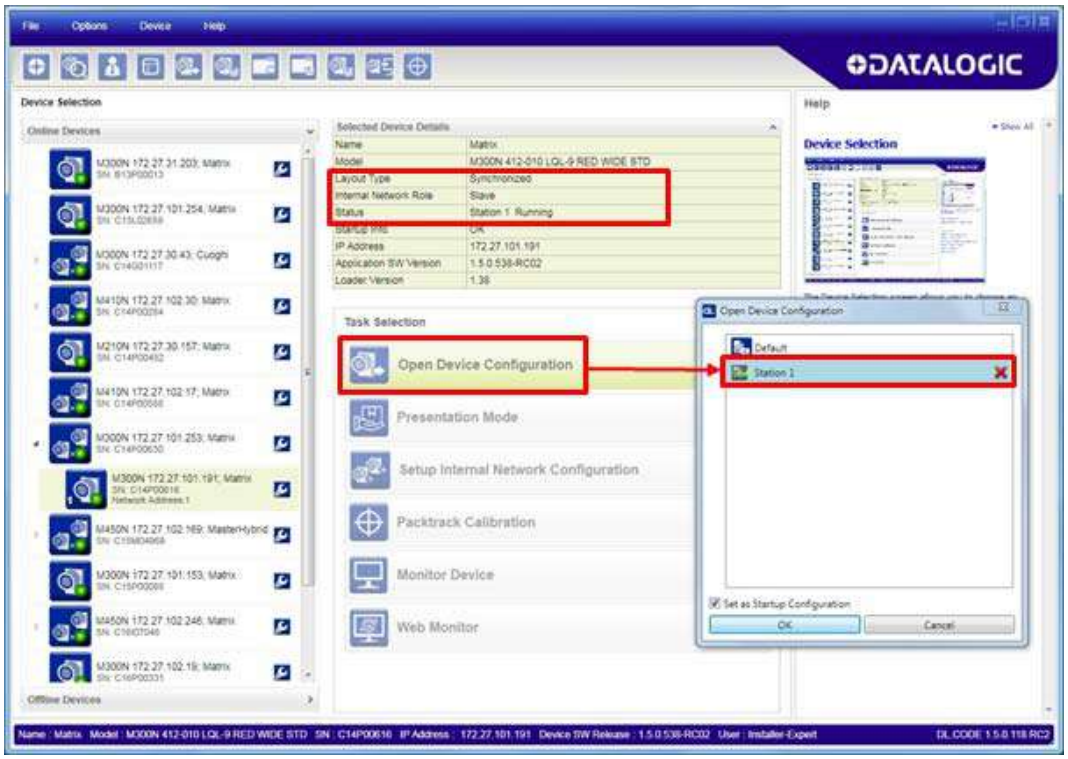

When the job opens, pause run mode and configure the Slave specific parameters. These depend on the application and include the following:

- photometric parameters (Image Auto-Setup feature in the Advanced Setup – Image Settings step)
- Acquisition Trigger Delays necessary to avoid lighting interference between adjacent or oppositely positioned readers (Reading Phase step)
- Images Saving if used (Data Formatting step)
- Encoder Sensor: if used, (for all Slaves, the Encoder Type must be set to **Internal**)

Verify the focus and decoding with the capture image button.

3. Now save them, overwriting the cloned application job[1].

Figure 96 – Saving Synchronized Phase Mode Configuration to Slave

Repeat this procedure for each Slave device until the entire network is configured.

See "ID-NET Synchronized Network" on page 97 for an example.

1. An application job with the same name as the Master's has been cloned to the Slaves. Each Slave can have its own Image Settings parameters saved in its own copy of the application job. Common parameters managed by the Master such as Operating Mode cannot be modified in the Slave jobs and are shown in dark grey.

Verify Master/Slave Synchronized Configuration

From the Master configuration, run the application and monitor the output data from the DL.CODE Console or a configured channel terminal.

If necessary, as a troubleshooting tip, you can temporarily apply the **Reading Mask** field in place of each Code Content field to verify if all devices are reading. To do this:

1. Connect to the Master device via Ethernet and from the Data Formatting step, change each Expected Code Field Type from Code Content to Reading Mask.

2. Run the application and monitor the output data from the DL.CODE Console or a configured channel terminal.

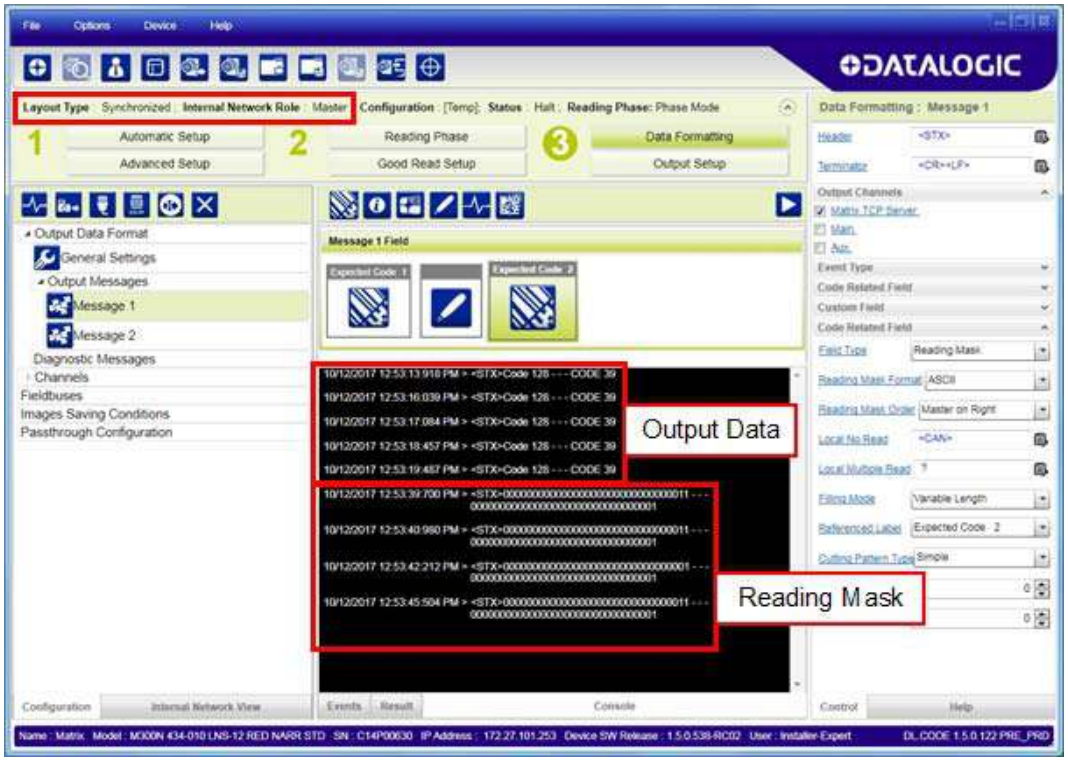

The Reading Mask shows which device reads which Expected Code. The mask is composed of a fixed 32-character string (0=No Read or 1=Read) representing the 32 possible readers in an ID-NET network. By default the Master is the last character in the string (**Master on Right**) but this can be changed. The Slaves are shown adjacent to the Master in order (1 to 31), by default from right to left.

Example: Master + Slave 1 = 00000000000000000000000000000011

The figure above shows that both the Master and Slave 1 are reading Code 128 while only the Master is reading Code 39.

3. After verifying correct functioning of the reading devices, return the Expected Code fields from Reading Mask to Code Content.

4. If you haven't made any other changes you can exit without saving. Otherwise, save the Master device configuration overwriting its previous one, making sure to save **without** **Clone Master Configuration on Slaves**, otherwise the Slave configurations will be overwritten.

To view the connected Slave configurations:

1. Click on the Internal Network View tab at the bottom of the screen.
2. Open the Master branch by clicking on the arrow to the left of the Master icon.
3. Select any slave. Wait for the configuration to load.
4. Click The Configuration tab at the bottom of the screen.

By selecting the various configuration steps above you can visualize the slave configuration.

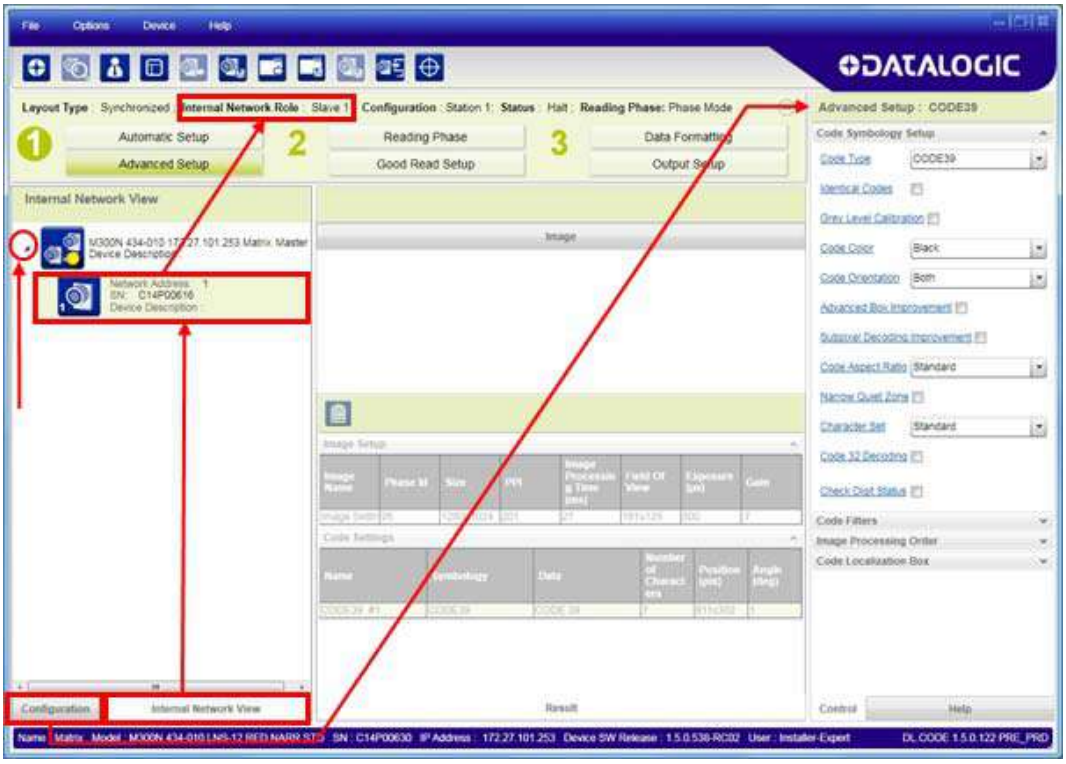

NOTE

You can modify some Slave Synchronized parameters from this view but you cannot save them here.

To save changed slave parameters here, you must click on the Master and Save the configuration overwriting it, making sure to select Save on Slave Device but without Clone Master Configuration on Slaves, otherwise all the Slave configuration parameters will be overwritten by the Master configuration.

Backup and Restore Through DL.CODE

DL.CODE allows Backup and Restore to be performed to/from the configuration PC via file or to an external storage device such as BM100.

It can be performed for Single Reader and Internal Network (Master/Slave) configurations.

Backup and Restore functions allow performing Complete Configuration and Environment parameter storage for Single Reader and ID-NET (Master/Slave) network devices as well as device firmware. Backup and Restore can be applied to any reader connected through a device having external backup memory, regardless of the reader's network configuration.

Backup to and Restore from external device is supported by DL.CODE for all reading devices when connected to:

- CBX + BM100
- QLM-Series Gateways

NOTE

Before executing a Backup to a BM100 backup module make sure the Write Protection switch is set to Unlocked.

Backup

To perform a **Backup**:

1. From the DL.CODE Device menu, select either **Single Reader Backup** (to file on PC); or **Backup to external storage device**.

NOTE

For ID-NET network Backup, select the Backup current Internal Network configurations selection.

You will be reminded that configuration in temporary memory will not be saved so you should save the configuration to the reader before performing Backup.

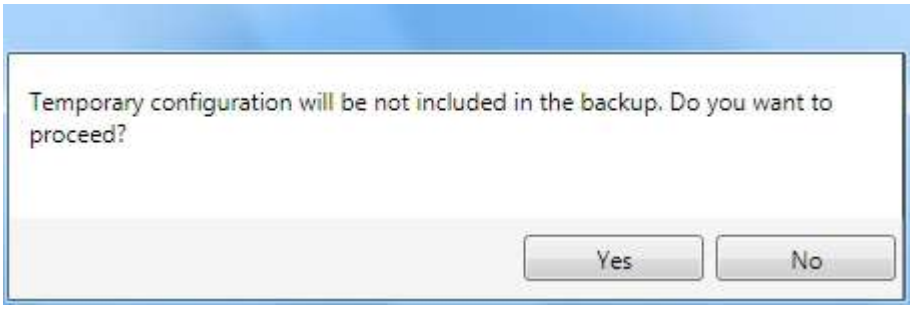

If you are performing a backup to a file you will be asked whether to include the firmware or not.

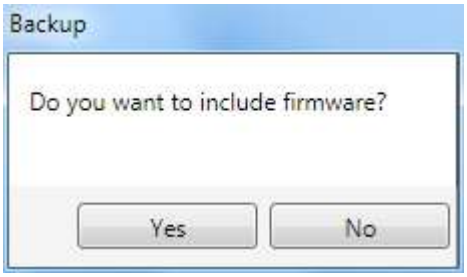

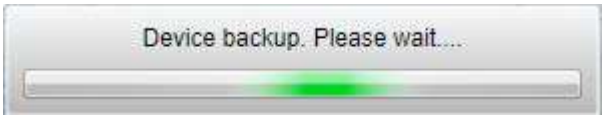

At the end of the backup, DL.CODE shows a message indicating successful completion.

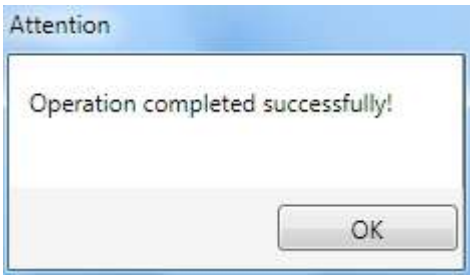

Restore

To perform a **Restore**:

1. From the DL.CODE Device menu, select either **Single Reader Restore** (from file on PC); or **Restore from external storage device**.

NOTE

For ID-NET network Restore, select the Internal Network replacement selection.

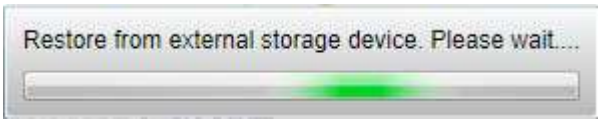

If restoring an ID-NET network though the Master, this may take a few minutes.

At the end of the restore, DL.CODE shows a message indicating successful completion.

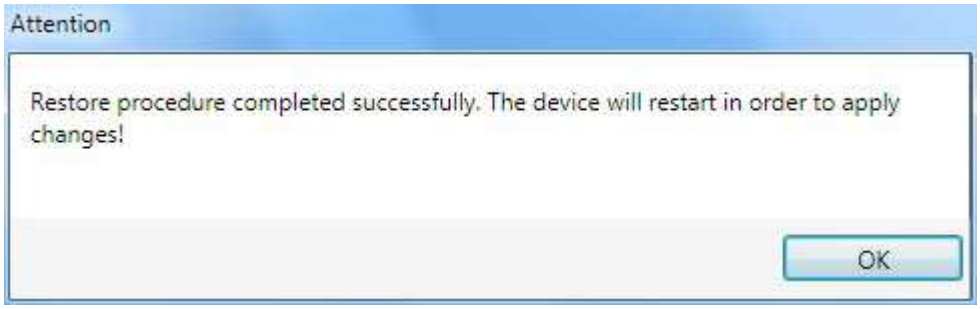

Replacement

CAUTION

The replacement device must be the exact same model as the device it is replacing.

The **Restore** function also provides easy and secure Single Device Replacement:

1. Remove the device to be replaced.
2. Connect the new device (make sure the new device has been previously set to factory default).
3. Run the Restore procedure by selecting either **Single Reader Restore** (from file on PC) or **Restore from external storage device** item (see: Restore procedure).

NOTE

In case of Backup or Restore operation failures, error messages will be displayed in the Monitor Diagnostic page.

Restore Defaults

The device parameters are divided into two main classes, Configuration and Environment which are affected differently by the Restore Defaults commands.

- The Configuration parameters are the ones set in the various steps of the configuration process and are specific to each application. When multiple configurations (jobs) are saved on a single device, these parameters can be different from one configuration to the next.
- Environment parameters regard the device Identity and Position in a Network (Ethernet, ID-NET, etc.) and are not influenced by the Default (or any other) Configuration present in memory.

Restore Default Startup Configuration

The Default configuration is always present on the reader and in fact it is not modifiable and cannot be deleted. It can always be restored by simply selecting it from the Open from Device configuration list.

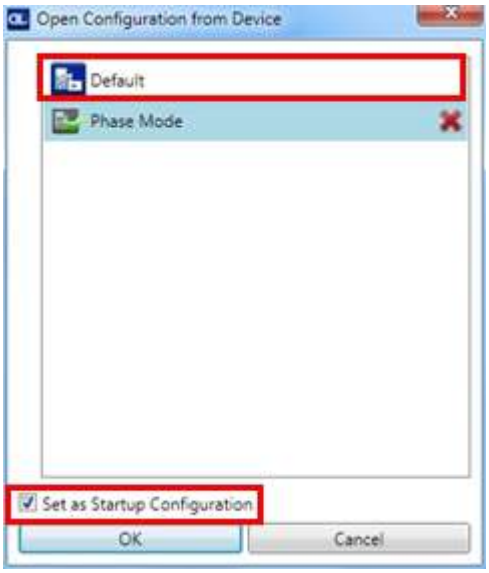

The same action can be performed from the Device menu >Backup/Restore > Restore Defaults > **Restore Default Startup Configuration**. The Default Configuration will be set to run at startup and the reader will be reset.

Any previously saved configurations on the device will remain in memory, but the Default configuration is set as the startup configuration.

Restore Default Environment

Restore Default Environment returns all Environment parameters to their factory default settings. The default IP address will be restored as well as all the parameters managed in the Device Environment Configuration window.

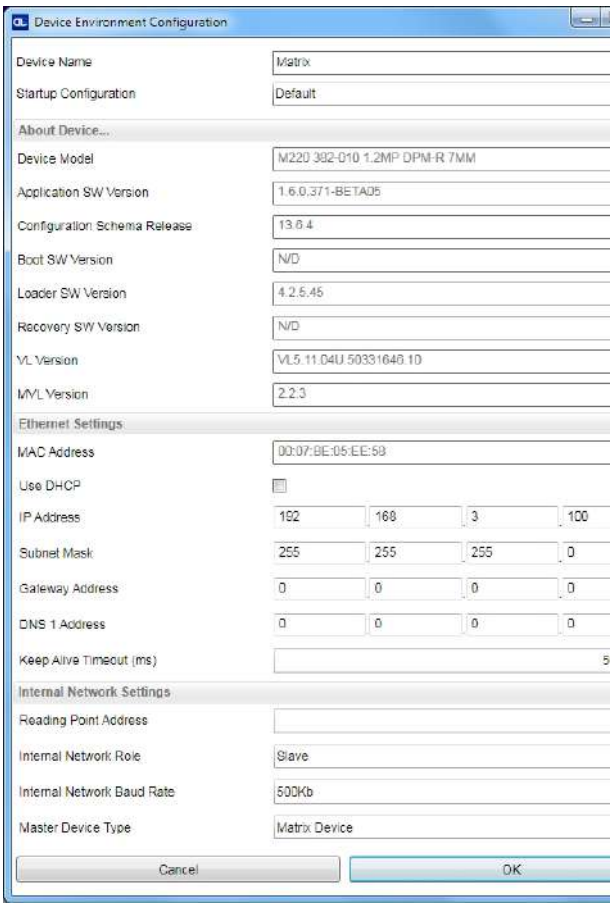

The Factory Default static IP address for all Matrix N Family readers is:

IP Address = 192.168.3.100

Any previously saved configurations on the device will remain in memory, but the Default configuration is set as the startup configuration.

Restore Factory Defaults

In order to return a device to its absolute Factory default parameters (for example device replacement) it is necessary to use the **Restore Factory Defaults** command. You will be prompted to confirm.

All Environment parameters will be restored to Factory default values **and any existing configurations stored on the device will be erased**. The device will be reset and therefore start in run mode with the factory default configuration.

Diagnostic Alarms

By using the **DL.CODE Monitor** functions from the File menu (or Monitor icon), you can get information about diagnostic alarms. Any alarms will show up as warning lights on the alarm panel.

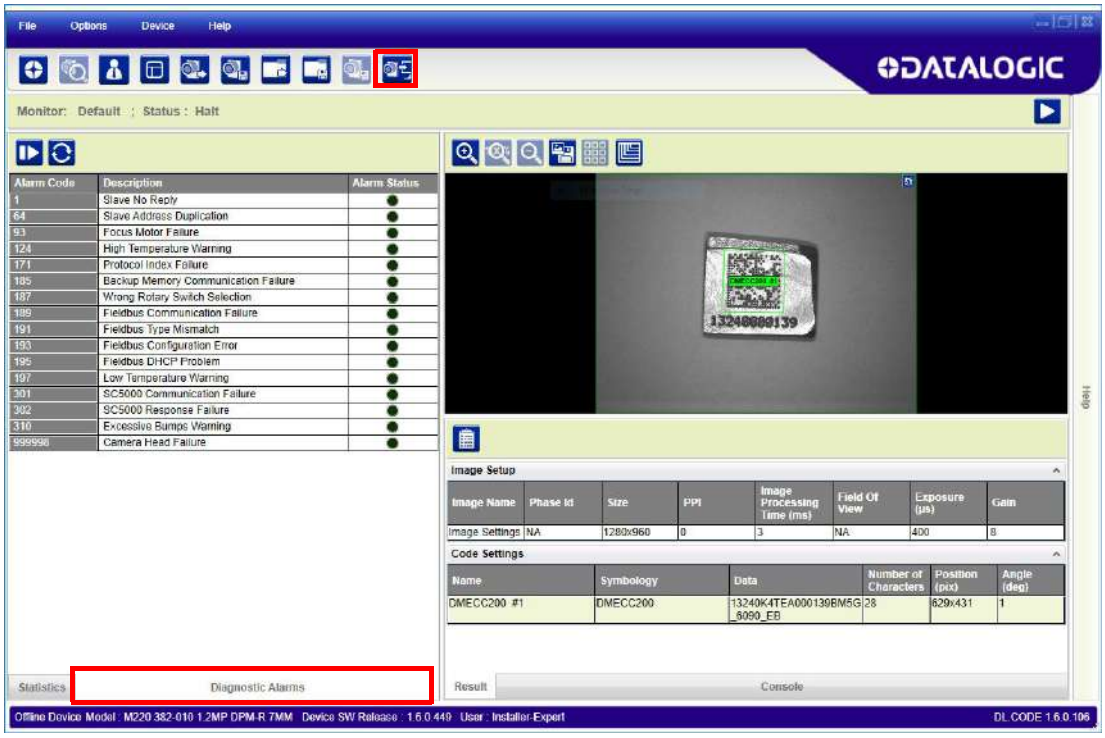

Figure 97 – Diagnostic Alarms

Statistics

Statistics on the reading performance can be viewed by enabling the Statistics panel from the **DL.CODE Monitor** item selected from the File menu (or Monitor icon).

Figure 98 – Reading Statistics

The enabled Statistical Counters can be selected from the Device>Settings>Configuration Settings menu.

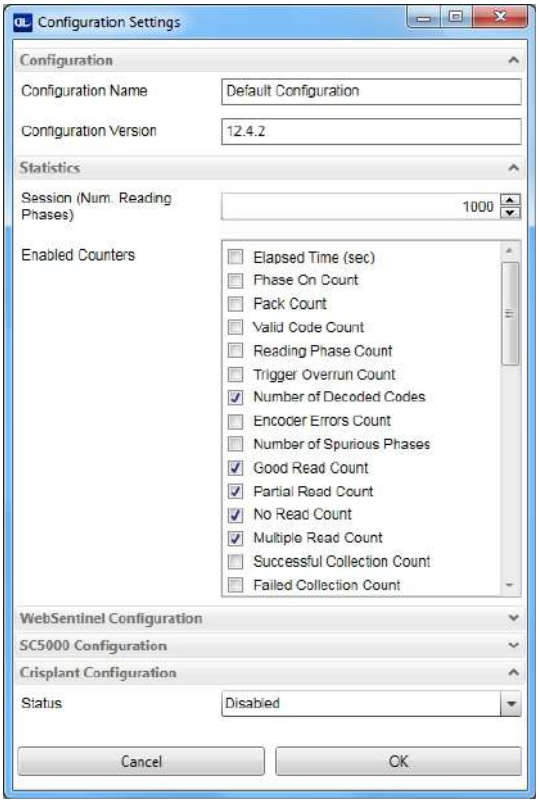

BM150 Display Module Configuration and Messages

The BM150 display module is an optional accessory for the CBX500 connection box. Although independent, it is an extension of the reader's HMI Interface, so through its keypad it provides execution of HMI features such as Test, Focus/Locate, Calibration and Code Setting. It also displays device status information, reading results, diagnostic and network messages. Since it connects through the BM100 backup memory module, it provides access to Backup and Restore features through its Extended menu.

Configuration Through DL.CODE

BM150 must be detected through the BM100 backup memory module at power-up/reset and this is done through a command setting in DL.CODE. By connecting the reader to DL.CODE the following parameters can be managed.

In the Device>Settings>Settings>Maintenance window:

- Enable BM100 Detection

  Checked (Enabled): the BM100 backup memory module will be detected on power-up/reset; therefore the BM150 display module (if present), will also be enabled.

  Unchecked (Disabled): the BM100 backup memory module will **not** be detected on power-up/reset; therefore the BM150 display module (if present), will also **not** be enabled.

- BM150 Display Layout (Master Only)

  Reading Mask Only: the Reading Mask screen is sent to the BM150 display.

  Reading Mask/Device State: the Reading Mask/Device State screen is sent to the BM150 display.

Accessing the HMI Interface Through Keypad and Display Menu

Through its keypad and display, the BM150 provides a remote extension of the reader's HMI Interface. The HMI default menu items can be accessed as well as the View menu for Master devices and the Extended menu for Backup and Restore functions.

Up	Enter	Down

Figure 99 – BM150 Keypad

To enter the Main Menu press the **Up** and **Down** buttons simultaneously.

The menu structure is shown below.

Main Menu:

1. **[Exit]** (exits HMI Interface menu)
2. **Test Mode** (performs Test mode)
3. **Focus/Locate** (performs Focus function: turns on LED pointers)
4. **Calibration** (performs Setup function)
5. **Code Setting** (performs Learn function)
6. **Match Code Tra** (Training: allows to read a code and store it as the Match code)

7. **View Menu (Master Only)**:

   [Exit] (returns to Main menu)

   Standard (displays the Standard Reading Results screen during run mode)

   Reading Mask (displays the Reading Mask or Reading Mask/Device State screen during run mode) depends on the selection in DL.CODE see par. Configuration Through DL.CODE.

   Network State (displays the Network State screen during run mode)

8. **Extended Menu**:

   [Exit] (returns to Main menu)

   Backup (performs Backup – uninterruptible)

   Restore (performs Restore – uninterruptible)

   Erase (erases the backup configuration in external memory – uninterruptible)

To move through the list press and release the **Up** or **Down** key.

To select an item or enter a submenu, press and release the **Enter** key. After executing an HMI function the display shows a result message and then automatically exits from the menu structure.

To exit a menu manually, press and release the **Enter** key at the [Exit] item or press the **Up** and **Down** buttons simultaneously.

To exit from a running HMI function, press the **Up** and **Down** buttons simultaneously. These functions will also exit upon their configured timeout.

NOTE

When the HMI Interface is entered from either the Local Device (reader) or Remote Device (BM150), the key(s) on the other device are disabled.

NOTE

When the reader is connected to DL.CODE, access to the BM150 HMI Interface is disabled.

NOTE

The "Reset Reader to Factory Default Environment" function of the HMI Interface is only available on the local device (reader), and not on the BM150.

Display Messages

The following examples of Remote Display messages are given to help interpret the information reported. The content of these messages depends on the connected reader.

Welcome Message:

```
M M M M M M M M M M M M
K K K V V V V V V V V V     R R R     N N N
S N     D D D D D D D D D
E T H     A A A . A A A . A A A . A A A
```

M = scanner model

K = software – STD=Standard, SS =Special

V = software version

R = Device Network Type – MUL=Multidata, SYN=Synchronized, ALN=Alone

N = Device Network Setting – M00=ID-NET Network Master, Sxx= ID-NET Network Slave address, Null string= Alone (no network)

D = device serial number

A = Ethernet IP Address

Test Mode Results:

```
A A A %   Z Z Z Z Z Z Z Z Z Z Z Z Z Z Z
Z Z Z Z Z Z Z Z Z Z Z Z Z Z Z Z Z Z Z Z
Z Z Z Z Z Z Z Z Z Z Z Z Z Z Z Z Z Z Z Z
```

A = reading percentage from 000 to 100%.

Z = code content.

Calibration (Setup) Results:

```
Exp=XXXX
Gain=GG
Calibration
OK   (permanent)
```

X = exposure value (in µs).

G = gain value

Code Setting (Learn) Results:

```
XXXXXXXXX

Code   Setting
OK   (permanent)
```

X = recognized code symbology.

Diagnostic Alarms:

Diagnostic error messages are sent to the BM150 display as numeric Alarm Codes, (even if Failure Messages are selected for data transmission the numeric Alarm Code is sent to the display).

```
Alert     :
Failure          #XXX

RRR   NNN
```

X = numeric Alarm Code (see below for the list of Alarm Codes)

R = Device Network Type – MUL=Multidata, SYN=Synchronized, ALN=Alone

N = Device Network Setting – M00=ID-NET Network Master, Sxx= ID-NET Network Slave address, Null string= Alone (no network)

Alarm Code	Description
1	Slave No Reply
64	Slave Address Duplication
171	Protocol Index Failure
185	Backup Memory Communication Failure
187	Wrong Rotary Switch Selection
189	Fieldbus Communication Failure
191	Fieldbus Type Mismatch
193	Fieldbus Configuration Error
195	Fieldbus DHCP Problem
201	No XRF Slave(s) Detected

Slave Node Alarms (Master only):

```
A l e r t     : I D - N E T
N o d e # X X   M i s s i n g

R R R   M 0 0
```

X = slave node number (1–31)

R = Device Network Type – MUL=Multidata, SYN=Synchronized

Network State (Master only):

```
  0       N e t w o r k       1 5
  M S S S S S S S S S S S S S S S
  1 6     N e t w o r k       3 1
  S S S S S S S S S S S S S S S S
```

M = Master diagnostic condition; S = Slave diagnostic condition:

- * = scanner OK
- – =scanner not detected at startup
- ? =scanner detected at startup but not responding to diagnostic polling
- ! = scanner diagnostic error

Standard Reading Results:

```
A A A A A A A A A A A A A
X X X X X X X X X X X X X X X X X X X
X X X X X X X X X X X X X X X X X X X
Y Y C o d e s
```

A = reading result – Good Read, Partial Read, Multiple Read

X = code content

Y = number of codes read

Reading Mask Only (Master Only):

```
X X X X X X X X X X X X X X X X X . . .
G Y Y Y % N Y Y Y % M Y Y Y % P Y Y Y %
S S S S S S S S S S S S S S S S
T T T T T T T T T T T T T T T T
```

X = code content (or "No Read" or "Multiple Read")

Y = Good Read, No Read, Multiple Read and Partial Read counters on the last 100 codes read (%)

S = Reading Mask for Stand Alone or Master plus Slave readers 1 – 15
(0 = No Read, 1 = Good Read, M = Multiple Read)

T = Reading Mask for Slave readers 16 – 31
(0 = No Read, 1 = Good Read, M = Multiple Read)

Reading Mask/Device State (Master Only):

```
X X X X X X X X X X X X X X X X X . . .
P = Y Y Y Y Y Y Y   G R = Z Z Z . Z Z %
S S S S S S S S S S S S S S S S
U U U U U U U U U U U U U U U U
```

X = Recognized code label data (or "No Read" or "Multiple Read")

Y = Phase Counter (range: 0000000 to 9999999)

Z = Good Read or Multiple Read counters (%)

S = Reading Mask for Stand Alone or Master plus Slave readers 1 – 15
(0 = No Read, 1 = Good Read, M = Multiple Read)

U = Diagnostic condition for Stand Alone or Master plus Slave readers 1 – 15:
- * = reader OK
- – = reader not detected at startup
- ? = reader detected at startup but not responding to diagnostic polling
- ! = reader diagnostic error

BM150 Backup and Restore Procedure

The Backup and Restore functions are valid for any application layout type (point-to-point, network, etc.) using CBX500 connection boxes through the BM100 Backup module (required accessory for BM150 installation).

The Backup and Restore functions are managed through the BM150 display and keypad and therefore are disabled at the BM100 Backup/Restore button.

If it ever becomes necessary to replace the reading device it can be quickly configured through the restore procedure.

BM150 provides complete backup and restore functions (Configuration and Environmental parameters) with the following difference:

For Single Readers or individual ID-NET Slaves:

- Backup and Restore functions provide parameter storage including all configuration jobs present on the reader.

For Master Readers in ID-NET Master/Slave networks:

- Backup and Restore functions provide parameter storage of only the Startup Configuration for the Master and all Slaves present in the network.

CAUTION

For Master/Slave networks any other configurations (jobs) stored in the device memory will not be backed up. Therefore upon a restore, all jobs other than the startup configuration will be overwritten (erased). It is strongly recommended to save all configurations to backup files.

The Slaves must always be configured with the same network baudrate as the Master for correct functioning including performing Backup and Restore procedures.

Backup and Restore functions cannot be interrupted once started.

To perform ***Backup***:

1. Make sure the Write Protection switch on the BM100 is unlocked.
2. Select the **Backup** item from the Extended menu and press the Enter key.
3. When the procedure is complete a message appears on the display showing the results (**Backup OK 1 File Saved** or an error message).
4. Set the Write Protection switch to locked.

To perform ***Restore***:

1. Select the **Restore** item from the Extended menu and press the Enter key.
2. When the procedure is complete a message appears on the display showing the results (**Restore OK 1 File Restored** or an error message).

Chapter 8
Maintenance

Cleaning

Clean the lens cover periodically for continued correct operation of the reader. See General View.

Dust, dirt, etc. on the lens cover may alter the reading performance.

Repeat the operation frequently in particularly dirty environments.

Use soft material and alcohol to clean the lens cover and avoid any abrasive substances.

Chapter 9
Troubleshooting

General Guidelines

- When wiring the device, pay careful attention to the signal name (acronym) on the CBX100/500 spring clamp connectors (Chapter 4). If you are connectiing directly to the Matrix 220 M12 17-pin connector, pay attention to the pin number of the signals (Appendix A).

- If you need information about a certain reader parameter you can refer to the DL.CODE help on line. Connect the device and click on the link to the parameter you're interested in.

- If you're unable to fix the problem and you're going to contact your local Datalogic office or Datalogic Partner or ARC, we suggest providing (if possible): Application Program version, Parameter Configuration file, Serial Number and Order Number of your reader. You can get most of this information while DL.CODE is connected to the reader.

Troubleshooting Guide	
Problem	**Suggestion**
DL.CODE Installation: Autorun or Start.hta doesn't run	Check Windows settings to see if Autorun is disabled. Associate the file type .hta with the Microsoft HTML Application host **mshta.exe** in Windows\System32.
Power ON: the 'POWER" LED is not lit.	Is power connected? If using a power adapter (like PG6000), is it connected to wall outlet? If using rail power, does rail have power? If using CBX, does it have power (check switch and LED)? Check if you are referring to the M12 17-pin connector or to the CBX spring clamp connectors. Measure Voltage either at pin **1** and pin **2** (for 17-pin connector) or at spring clamp **Vdc** and **GND** (for CBX).

Troubleshooting Guide	
Problem	**Suggestion**
One Shot or Phase Mode using the Input 1 (External Trigger) or Input 2: the "TRIGGER" LED is not blinking while the External Trigger is switching.	Check if you are referring to the 17-pin connector or to the CBX spring clamp connectors. Is the sensor connected to Input 1 or Input 2? Is power supplied to the photo sensor? For NPN configuration, is power supplied to one of the two I1 or I2 signals (A or B)? For PNP configuration, is one of the two I1 or I2 signals grounded (A or B)? Are the photo sensor LEDS (if any) working correctly? Is the sensor/reflector system aligned (if present)? On the Reading Phase step check the Input 1 or Input 2 *Debouncing Time* parameter setting. On the Reading Phase step check the settings for *Acquisition Trigger, Reading Phase-ON,* and *Reading Phase-OFF* parameters.
One Shot or Phase Mode using serial trigger source: the "TRIGGER" LED is not blinking.	On the Reading Phase step check the settings for *Acquisition Trigger, Reading Phase-ON,* and *Reading Phase-OFF* parameters. Are the COM port parameters (*Baud Rate, Parity, Data Bits, Stop Bits*) correctly assigned? On the Reading Phase step check the settings of *Acquisition Trigger String, Reading Phase-ON String,* and *Reading Phase-OFF String* parameters. Is the serial trigger source correctly connected?
Phase Mode: the "TRIGGER" LED is correctly blinking but no image is displayed in the DL.CODE window.	Is the Phase frequency lower than the maximum frame rate?
Continuous Mode: the "TRIGGER" LED is not blinking.	Verify the correct software configuration settings.
Any Operating Mode: the "TRIGGER" LED is correctly blinking but no result is transmitted by the reader at the end of the reading phase collection.	Check the Code Collection parameters on the Reading Phase step and the Data Formatting parameters on the Data Formatting step.
Image not clear:	verify the Focus procedure
Image focused but not decoded:	verify the Calibrate Image Density procedure.

Troubleshooting Guide	
Problem	**Suggestion**
Reading: the reader always transmits the *No Read Message*	Run the Rapid Configuration procedure in Chapter 1. Position the reader as described in "Mounting And Positioning Matrix 220" on page 58 and through DL.CODE: Tune the Acquisition Delay on Trigger, if the moving code is out of the reader field of view; Set the Continuous Operating Mode if no external trigger source is available; Tune the Image Settings to improve the code image quality; Check the parameter settings in the Advanced Setup step: 2D Codes, 1D Codes, and Postal Codes; View the full resolution code image to check the printing or marking quality.
Communication: reader is not transmitting anything to the host.	Is the serial cable wiring correct? If using CBX, be sure the RS422 termination switch is OFF. Are the host serial port settings the same as the reader serial port settings? In DL.CODE Device menu > Settings > Settings > LED Configuration, the COM LED Function can be configured to indicate Main Serial Port TX or Main Serial Port RX.
Communication: data transferred to the host are incorrect, corrupted or incomplete.	Are the host serial port settings the same as the reader serial port settings? In the DL.CODE Data Formatting step check the settings of Header and Terminator String parameters. In the DL.CODE Data Formatting step, check the various Message Field parameter settings.
Configuration: cannot access environment parameters in DL.CODE (Device>Settings>Settings menu item is grey)	Are you using the Installer - Expert User level? If not change it in the Options>Change User menu.
How do I obtain my reader Serial Number?	The reader Serial Number consists of 9 characters: one letter, 2 numbers, another letter followed by 5 numbers. The reader Serial Number is printed on a label that is affixed to the case or connector block of the reader. The Serial Number is also visible from the DL.CODE Device List Area.
How do I obtain my reader Order Number?	The reader Order Number consists of 9 numbers. The reader Order Number can be obtained by comparing the Device Model (in DL.CODE Device Menu > Settings > Settings > About Device) with the product models page on the Datalogic website.

Chapter 10
Technical Features

Electrical Features

Electrical Features		
Power	Standard Models	PoE Models
Supply Voltage	10 to 30 Vdc	48 Vdc
Consumption	0.40 - 0.14 A (4.2 W) max	0.10 A (4.8 W) max
Communication Interfaces		
Main: RS232, RS422 Full-duplex	2400 to 115200 bit/s	
Auxiliary: RS232	2400 to 115200 bit/s	
ID-NET	Up to 1 Mbaud	
Ethernet (Built-in) supported application protocols	10/100 Mbit/s TCP/IP, UDP, FTP, EtherNet/IP, Modbus TCP, PROFINET-IO, OPC UA	
Inputs Input 1(External Trigger) and Input 2	Opto-coupled and polarity insensitive	
Max. Voltage	30 Vdc	
Max. Input Current	10 mA	
Outputs [a] Output 1, 2 and 3	NPN or PNP short circuit protected;	
V_{OUT} (I_{LOAD} = 0 mA) Max.	30 Vdc	
V_{OUT} (I_{LOAD} = 100 mA) Max.	3 Vdc	
I_{LOAD} Max.	100 mA	

a. when connected to the CBX connection boxes the electrical features for Output 1 and 2 become the following: Opto-isolated; V_{CE} = 30 Vdc max.; I_{CE} = 40 mA continuous max.; 130 mA pulsed max.; $V_{CE\ saturation}$ = 1 Vdc max. @ 10 mA; P_D = 90 mW Max. @ 50 °C ambient temp.

Optical Features

Optical Features	
Image Sensor	CMOS sensor with Global Shutter
Image Format	1.3" 1.2 M pixels
Frame Rate	45 frames/sec.
Pitch	± 35°
Tilt	0° - 360°
LED Safety	to EN 62471
Lenses	
Focal Length	7 mm, 12 mm
Lighting System	Internal Illuminators
Aiming System	Dual LED Pointers

Environmental Features

Environmental Features	
Operating Temperature [a]	-10 to 50 °C (14 to 122 °F)
Storage Temperature	-20 to 70 °C (-4 to 158 °F)
Max. Humidity	90% non condensing
Vibration Resistance EN 60068-2-6	14 mm @ 2 to 10 Hz; 1.5 mm @ 13 to 55 Hz; 2 g @ 70 to 500 Hz; 2 hours on each axis
Bump Resistance EN 60068-2-29	30g; 6 ms; 5000 shocks on each axis
Shock Resistance EN 60068-2-27	30g; 11 ms; 3 shocks on each axis
Protection Class [b] EN 60529	IP65 and IP67

a. high ambient temperature applications should use metal mounting bracket for heat dissipation.
b. when correctly connected to IP67 cables with seals. Cables must be completely tightened to assure sealing. If ESD Safe or YAG Cut Filter accessory windows are used the device has an IP64 Protection Class rating.

Physical Features

Physical Features	
Dimensions Std Matrix 220 connectors at 0° Std Matrix 220 connectors at 90° ESD Matrix 220 connectors at 0° ESD Matrix 220 connectors at 90°	H x W x L 78 x47 x 38 mm (3.1 x 1.9 x 1.5 in) 58 x 47 x 58 mm (2.3 x 1.9 x 2.3 in) 78 x47 x 43 mm (3.1 x 1.9 x 1.7 in) 58 x 47 x 63 mm (2.3 x 1.9 x 2.5 in)
Weight	about 173 g. (6.1 oz.)
Material	Aluminium with plastic protective window cover

Software Features

Software Features			
Readable Code Symbologies			
1D and Stacked	2D	Postal	Digimarc Barcode
PDF417 Standard and Micro PDF417 Code 128 (GS1-128) Code 39 (Standard and Full ASCII) Code 32 MSI Standard 2 of 5 Matrix 2 of 5 Interleaved 2 of 5 Codabar Code 93 Pharmacode EAN-8/13 - UPC-A/E (including Addon 2 and Addon 5) GS1 DataBar Family Composite Symbologies	Data Matrix ECC 200 (Standard, GS1 and Direct Marking) QR Code (Standard and Direct Marking) Micro QR Code MAXICODE Aztec Code Digimarc Barcode	Australia Post Royal Mail 4 State Customer Kix Code Japan Post PLANET POSTNET POSTNET (+BB) Intelligent Mail Swedish Post	DWCODE™
Operating Mode	Continuous, One Shot, Phase Mode		
Configuration Methods	X-PRESS Human Machine Interface Windows-based SW (DL.CODE) via Ethernet Interface Host Mode Programming sequences sent over Serial or Ethernet TCP interfaces		
Parameter Storage	Permanent memory (Flash)		

Appendix A
Alternative Connections

The connector pinouts and notes given in this appendix are for custom cabling applications.

Power, Com and I/O Connector for Standard Models

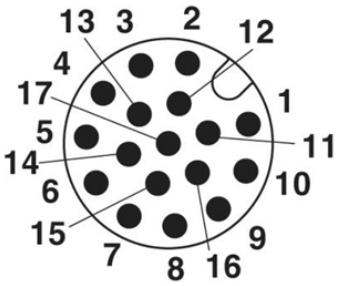

Figure 1 – M12 17-pin male Power, COM and I/O Connector

Power, Com and I/O Connector Pinout			
Pin	**Name**	**Description**	
1	Vdc	Power supply input voltage +	
2	GND	Power supply input voltage -	
Connector case	CHASSIS	Connector case provides electrical connection to the chassis	
6	I1A	External Trigger A (polarity insensitive)	
5	I1B	External Trigger B (polarity insensitive)	
13	I2A	Input 2 A (polarity insensitive)	
3	I2B	Input 2 B (polarity insensitive)	
9	O1	Output 1	(NPN or PNP short circuit protected and software programmable)
8	O2	Output 1	
16	O3	Output 1	
14	RX	Auxiliary RS232 RX	
4	TX	Auxiliary RS232 TX	

Power, Com and I/O Connector Pinout			
Pin	**Name**	**Description**	
7	ID+	ID-NET network data +	
15	ID-	ID-NET network data -	
Pin	**Name**	**RS232**	**RS422 Full-Duplex**
17	Main Interface (SW Selectable)	TX	TX+
11		RX	*RX+
12		-	TX-
10		-	*RX-

* Do not leave floating, see "RS422 Full Duplex Interface" on page 71 for connection details.

In order to meet EMC requirements:

- connect the reader chassis to the plant earth ground by means of a flat copper braid shorter than 100 mm;
- connect your cable shield to the locking ring nut of the connector.

Com and Trigger Connector for PoE Models

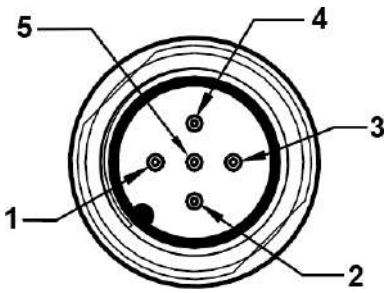

Figure 2 – M12 5-pin male COM and Trigger Connector

Com and Trigger Connector Pinout		
Pin	**Name**	**Description**
1	I1A	External Trigger A (polarity insensitive)
2	RX	RS232 Main Serial Receive data signal
3	TX	RS232 Main Serial Transmit data signal
4	I1B	External Trigger B (polarity insensitive)
5	GND	RS232 Main Serial Reference

In order to meet EMC requirements:

- connect the reader chassis to the plant earth ground by means of a flat copper braid shorter than 100 mm;
- connect your cable shield to the locking ring nut of the connector.

On-Board Ethernet Connector

Standard Models

A Standard M12 8-pin X-Coded female connector is provided for the on-board Ethernet connection. This interface is IEEE 802.3 10 BaseT and IEEE 802.3u 100 BaseTx compliant.

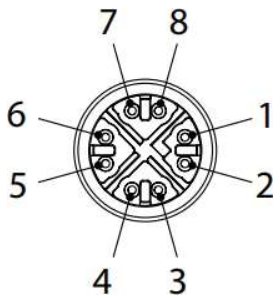

Figure 3 – M12 X-Coded Female Ethernet Network Connector

On-Board Ethernet Network Connector Pinout		
Pin	**Name**	**Description**
1	TX+	Transmit data +
2	TX-	Transmit data -
3	RX+	Receive data +
4	RX-	Receive data -
5	nc	Not Connected
6	nc	Not Connected
7	nc	Not Connected
8	nc	Not Connected

Power over Ethernet (PoE) Models

A Standard M12 8-pin X-Coded female connector is provided for the on-board Power over Ethernet connection. This interface is IEEE 802.3 10 BaseT and IEEE 802.3u 100 BaseTx compliant.

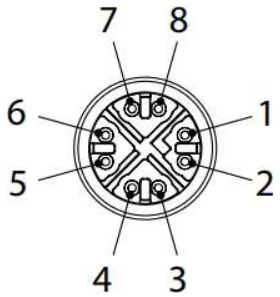

Figure 4 – M12 X–Coded Female Ethernet Network Connector

On-Board Ethernet Network Connector Pinout		
Pin	**Name**	**Description**
1	TX+	Transmit data +
2	TX-	Transmit data -
3	RX+	Receive data +
4	RX-	Receive data -
5	DC1-	DC power (-)
6	DC2-	DC power (-)
7	DC1+	DC power (+)
8	DC2+	DC power (+)

Power can be applied to any of the data pairs according to the IEEE 802.3af standard for Alternative A (Mid and Endspan) or Alternative B.

ID-NET Network Termination

The network must be properly terminated by a 120 Ohm resistor at the first and last reader of the network.

Inputs

There are two optocoupled polarity insensitive inputs available on the M12 17-pin connector of the reader: Input 1 (External Trigger) and Input 2, a generic input. See "Inputs" on page 78 for more details.

The electrical features of both inputs are:

INPUT	$\lvert V_{AB} \rvert$ Min.	$\lvert V_{AB} \rvert$ Max.	I_{IN} Max.
Open	0 V	2 V	0 mA
Closed	4.5 V	30 V	10 mA

The relative pins on the M12 17-pin connector are:

Input Pinout		
Pin	**Name**	**Description**
1	Vdc	Power Supply input voltage +
6	I1A	External Trigger A (polarity insensitive)
5	I1B	External Trigger B (polarity insensitive)
13	I2A	Input 2 A (polarity insensitive)
3	I2B	Input 2 B (polarity insensitive)
2	GND	Power Supply input voltage -

Outputs

Three general purpose **non opto-isolated** but short circuit protected outputs are available on the M12 17-pin connector.

The pinout is the following:

Output Pinout		
Pin	**Name**	**Description**
9	O1	Configurable digital output 1
8	O2	Configurable digital output 2
16	O3	Configurable digital output 3
2	GND	Ouptut reference signal

The electrical features of the three outputs are the following:

Reverse-Polarity and Short-Circuit Protected
V_{OUT} (I_{LOAD} = 0 mA) max = 30 Vdc
V_{OUT} (I_{LOAD} = 100 mA) max = 3 Vdc
I_{LOAD} max = 100 mA

The output signals are fully programmable being determined by the configured Activation/Deactivation events, Deactivation Timeout or a combination of the two. For further details refer to the Help On Line page for the Output Setup step in DL.CODE.

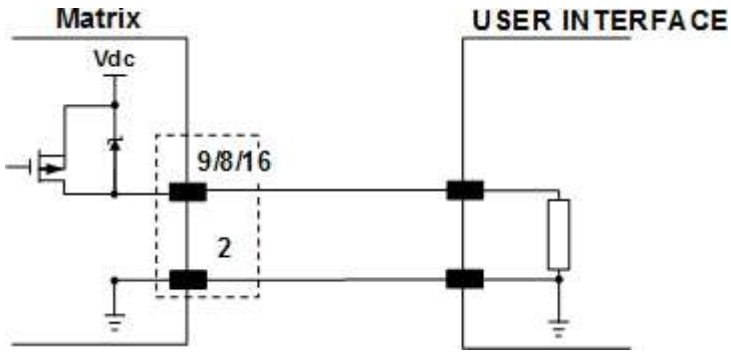

Figure 5 – PNP Output Connection

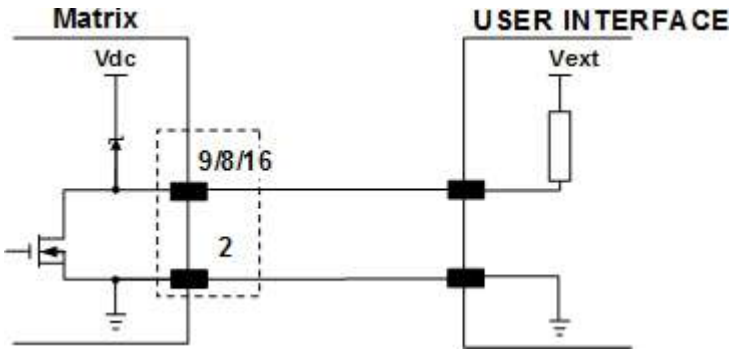

Figure 6 – NPN Output Connection

CAUTION

For NPN output connections, the external interface voltage (Vext) must not exceed the Matrix 220 power supply source voltage (Vdc) otherwise correct output functioning cannot be guaranteed.

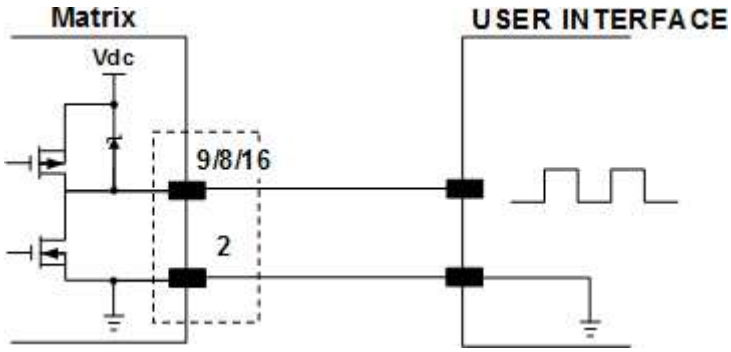

Figure 7 – Push–Pull Output Connection

CAUTION

For Matrix 220 PoE models, the internal Digital Output circuitry is not powered and supply power is not available to any Input/Output devices (Vdc=0). Only input device signals can be accepted directly on the M12 17-pin connector without power.

For these models, if it is necessary to use Input/Output devices, we recommend connecting them through the CBX, which must be powered separately.

User Interface - Serial Host

RS232 PC-side Connections			
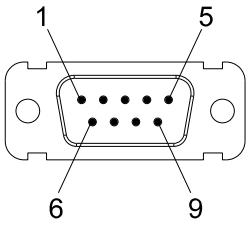 9-pin male connector		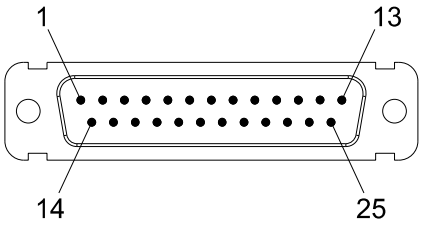 25-pin male connector	
Pin	**Name**	**Pin**	**Name**
2	RX	3	RX
3	TX	2	TX
5	GND	7	GND

How To Build A Simple Interface Test Cable:

The following wiring diagram shows a simple test cable including power, external (push-button) trigger and PC RS232 COM port connections.

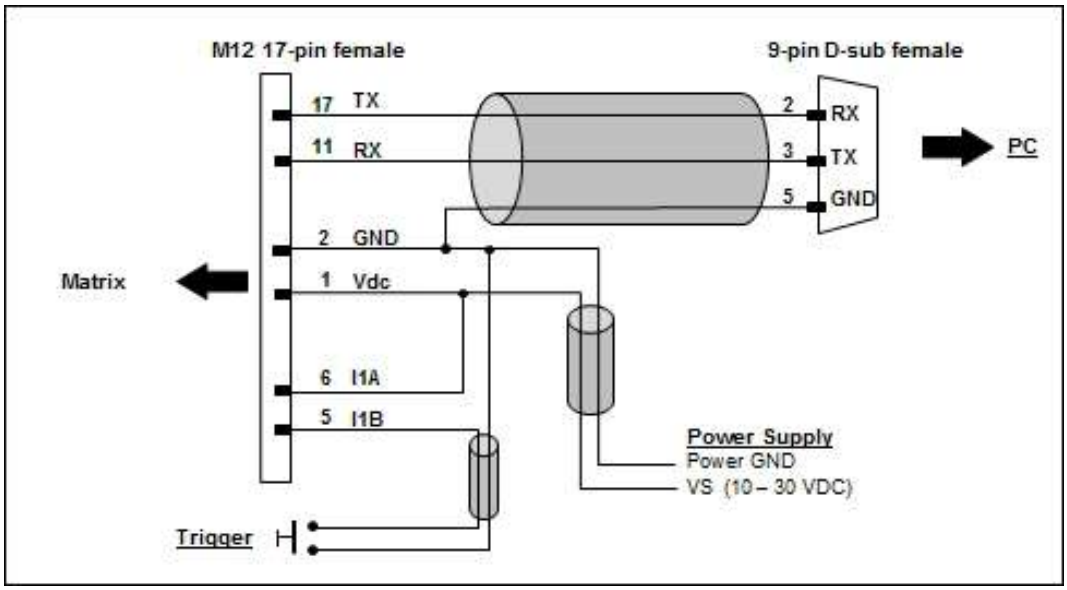

Figure 8 – Test Cable

Glossary

AIM

(Association for Automatic Identification and Mobility): AIM Global is the international trade association representing automatic identification and mobility technology solution providers.

AIM DPM Quality Guideline

Standard applicable to the symbol quality assessment of direct part marking (DPM) performed in using two-dimensional bar code symbols. It defines modifications to the measurement and grading of several symbol quality parameters.

Barcodes (1D Codes)

A pattern of variable-width bars and spaces which represents numeric or alphanumeric data in machine-readable form. The general format of a barcode symbol consists of a leading margin, start character, data or message character, check character (if any), stop character, and trailing margin. Within this framework, each recognizable symbology uses its own unique format.

BIOS

Basic Input Output System. A collection of ROM-based code with a standard API used to interface with standard PC hardware.

Bit

Binary digit. One bit is the basic unit of binary information. Generally, eight consecutive bits compose one byte of data. The pattern of 0 and 1 values within the byte determines its meaning.

Bits per Second (bps)

Number of bits transmitted or received per second.

Bright Field Illumination

Lighting of surfaces at high (narrow) angles used to provide maximum reflection of the light to the reader's lens. This is effective on surfaces that absorb light or are not highly reflective and also on low contrast codes.

Byte

On an addressable boundary, eight adjacent binary digits (0 and 1) combined in a pattern to represent a specific character or numeric value. Bits are numbered from the right, 0 through 7, with bit 0 the low-order bit. One byte in memory can be used to store one ASCII character.

Composite Symbologies

Consist of a linear component, which encodes the item's primary data, and an adjacent 2D composite component, which encodes supplementary data to the linear component.

Dark Field Illumination

Lighting of surfaces at wide angles used to avoid direct reflection of the light into the reader's lens. Typically this type of lighting is used in DPM solutions to enhance reflectance of the uneven surface do to the symbol marking technique. It is also used with very reflective surfaces.

Decode

To recognize a barcode symbology *(e.g.,* Codabar, Code 128, Code 3 of 9, UPC/EAN, etc.) and analyze the content of the barcode scanned.

Depth of Field

The difference between the minimum and the maximum distance of the object in the field of view that appears to be in focus.

Diffused Illumination

Distributed soft lighting from a wide variety of angles used to eliminate shadows and direct reflection effects from highly reflective surfaces.

Direct Part Mark (DPM)

A symbol marked on an object using specific techniques like dot peening, laser etching, chemical etching, etc.

EEPROM

Electrically Erasable Programmable Read-Only Memory. An on-board non-volatile memory chip.

Element

The basic unit of data encoding in a 1D or 2D symbol. A single bar, space, cell, dot.

Exposure Time

For digital cameras based on image sensors equipped with an electronic shutter, it defines the time during which the image will be exposed to the sensor to be acquired.

Flash

Non-volatile memory for storing application and configuration files.

Host

A computer that serves other terminals in a network, providing services such as network control, database access, special programs, supervisory programs, or programming languages.

Image Processing

Any form of information processing for which the input is an image and the output is for instance a set of features of the image.

Image Resolution

The number of rows and columns of pixels in an image. The total number of pixels of an image sensor.

Image Sensor

Device converting a visual image to an electric signal. It is usually an array of CCD (Charge Coupled Devices) or CMOS (Complementary Metal Oxide Semiconductor) pixel sensors.

IEC

(International Electrotechnical Commission): Global organization that publishes international standards for electrical, electronic, and other technologies.

IP Address

The terminal's network address. Networks use IP addresses to determine where to send data that is being transmitted over a network. An IP address is a 32-bit number referred to as a series of 8-bit numbers in decimal dot notation *(e.*g., 130.24.34.03). The highest 8-bit number you can use is 254.

ISO

(International Organization for Standardization): A network of the national standards institutes of several countries producing world-wide industrial and commercial standards.

LED (Light Emitting Diode)

A low power electronic light source commonly used as an indicator light. It uses less power than an incandescent light bulb but more than a Liquid Crystal Display (LCD).

LED Illuminator

LED technology used as an extended lighting source in which extra optics added to the chip allow it to emit a complex radiated light pattern.

Matrix Symbologies (2D Codes)

An arrangement of regular polygon shaped cells where the center-to-center distance of adjacent elements is uniform. Matrix symbols may include recognition patterns which do not follow the same rules as the other elements within the symbol.

Multi-row (or Stacked) Symbologies

Symbologies where a long symbol is broken into sections and stacked one upon another similar to sentences in a paragraph.

RAM

Random Access Memory. Data in RAM can be accessed in random order, and quickly written and read.

Symbol Verification

The act of processing a code to determine whether or not it meets specific requirements.

Transmission Control Protocol/Internet Protocol (TCP/IP)

A suite of standard network protocols that were originally used in UNIX environments but are now used in many others. The TCP governs sequenced data; the IP governs packet forwarding. TCP/IP is the primary protocol that defines the Internet.

© 2018-2019 Datalogic S.p.A. and /or its affiliates ▪ All rights reserved. ▪ Without limiting the rights under copyright, no part of this documentation may be reproduced, stored in or introduced into a retrieval system, or transmitted in any form or by any means, or for any purpose, without the express written permission of Datalogic S.p.A. and/or its affiliates ▪ Datalogic and the Datalogic logo are registered trademarks of Datalogic S.p.A. in many countries, including the U.S. and the E.U.

www.datalogic.com

Datalogic S.r.l.
Via S. Vitalino, 13 | 40012 Calderara di Reno | Bologna - Italy
Tel. +39 051 3147011 | Fax +39 051 3147205

821005812 (Rev. C) July 2019