MX-E Series

DATALOGIC

MX-E SERIES

The MX-E Series of Vision Processors provides the highest performance in image processing with unmatched flexibility through GigE multi-camera connectivity support.

The MX-E Series allows users to choose the level of system performance and complexity based on their application needs. Three different MX-E models are available, each featuring the latest Intel chipsets and high speed PoE (Power over Ethernet) camera ports.

MX-E vision processors are equipped with NPN or PNP digital I/Os and power two or four GigE cameras.

The MX-E20 is an entry-level, affordable processor featuring an Intel® Celeron dual core 1.4 GHz processor and two independent Gigabit PoE camera ports. The MX-E20 offers a cost effective means to migrate from smart camera applications to an embedded vision system.

The MX-E40 Series is a rugged and compact embedded vision processor that features Intel® multi-core processors and two or four independent Gigabit PoE camera ports. The MX-E40's long-life embedded components provide a robust and reliable vision system for critical inspection applications.

The next generation MX-E80 Vision Processor extends the power and performance of the MX-E Series to applications that demand faster, more advanced algorithms and higher-resolutions with its Intel® Core™ i7 quad-core processor, 8GB memory and two or four independent Gigabit PoE ports.

Powered by IMPACT, the MX-E Series is the ideal solution for the deployment of embedded vision systems with multiple independent inspection points.

VISION

GigE VISION

HIGHLIGHTS

- Rugged, industrial, high-powered vision processors
- State-of-the-art Intel® chipsets and the highest-quality, industry leading hardware components
- Long-term product availability
- Ethernet (GigE Vision) connectivity and multi-camera support
- Three models for different performance levels and ten different hardware configurations
- Compatible with a wide range of cameras from VGA up to 16MP resolution (areascan), from 2K up to 8K (line-scan)
- Universal dongle for easier SW license management
- Complete IMPACT software suite included for ultimate programming flexibility – addresses any inspection and user interface needs
- Two or four channel Power over Ethernet (PoE) camera ports – PoE compliant cameras need no power cables and support up to 100 meter cable lengths

BENEFITS

- The ultimate Intel® multi-core chipsets guarantee extraordinary computing power and maximize multi-camera inspection speed
- The highest quality hardware components in a rugged and compact processor chassis guarantee robustness and long-life service even in the harshest industrial environments
- Multi-camera capability - allows data collection and analysis from multiple points and reduces integration costs
- Three different models allow the user to select the correct level of performance based on the application needs
- Simplifies cabling by eliminating the need for camera power cables
- Universal dongles enable IMPACT software license and add-on license functionalities on all the vision processor models. Users can move licenses from one vision processor to another
- Ten harwdare configuration options deliver unmatched application flexibility

MX-E Series

DATALOGIC

TECHNICAL DATA

	MX-E20	MX-E40	MX-E80
CPU	Intel® Celeron 1047UE 1.4 Ghz – dual core	Intel® Celeron 1020E 2.2 Ghz – dual core	Intel® Core i7 3615QE 2.3 Ghz – quad core
System memory	4 GB DDR3 RAM		8 GB DDR3 RAM
Storage	60 GB SATA SSD (MLC)		128 GB SATA SSD (MLC)
Graphics	Intel® HD 3000 (1920x1200 resolution) - DVI		
Camera interface	See table below		
Camera imager limit	2Mpix or lower	None	
Network interface	2x LAN ports - 10/100/1000 Mbps Base-T		
Serial communications	1x RS-232 serial port		
Keyboard/mouse	4x USB3.0 ports		
Comm connectivity	Supports Ethernet/IP, PROFINET, Modbus TCP and OPC		
I/O	See table below		
Operating system	Windows Embedded Standard 7		
Supply voltage	24 VDC +/- 25%		
Nominal current draw	5.5 A @ 24 VDC		
Dimensions	270 (H) x 130 (W) x 255 (D) mm - 10.6 (H) x 5.1 (W) x 10 (D) in.		
Weight	2050 g		
Housing	Galvanized plate - plastic		
Operating temperature	0 to 55° C - 32 to 131° F		
Operating humidity	10 to 90% (non-condensing)		
Mechanical protection	IP20		
Certifications (safety compliance)	CE, c-UL-us		

PART NUMBER KEY

MODEL	PROCESSING POWER	-	NO. OF PORTS	-	I/O TYPE	-	OPERATING SYSTEM
MX-E	XX	-	X	-	X	-	X
	20 = Celeron - 1.4GHz Dual Core 40 = Celeron - 2.2GHz Dual Core 80 = i7 - 2.3GHz Quad Core		2x 1000 Mbps Base-T, PoE camera ports (Up to 7W per channel) 4x 1000 Mbps Base-T, PoE camera ports (Up to 7W per channel)		P = 16 IN - 16 OUT PNP N = 16 IN - 16 OUT NPN		1 = WES7
Examples	MX-E20-2-P-1 = MX-E20 with 2 camera ports, PNP I/Os, WES7 OS MX-E80-4-N-1 = MX-E80 with 4 camera ports, NPN I/Os, WES7 OS						

MECHANICAL DRAWINGS

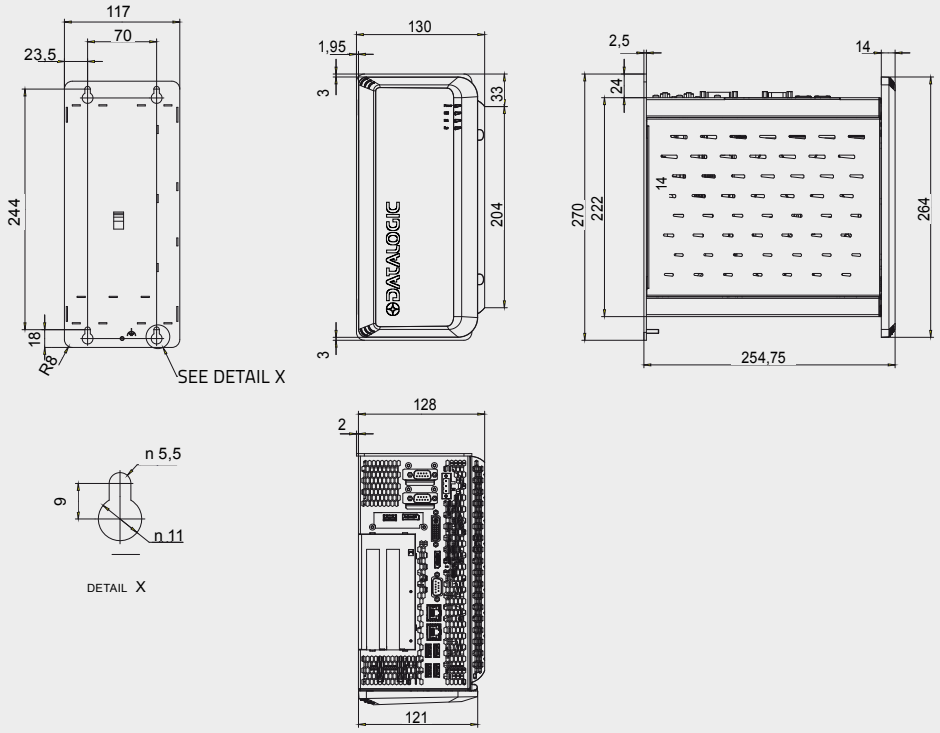

E100 SERIES CAMERAS

The E100 Series features a state-of-art grayscale or color CMOS image sensor and supports standard vision GigE connectivity. Thanks to their small housing, E100 Series allow for easy installation in locations where space is constrained.
The E100 Series is the ideal solution for fast embedded vision system integration and ensures an outstanding price/performance ratio. High resolution and frame rate guarantee superior image acquisition for tackling the most complex machine vision applications.

BENEFITS

- Reduced size for minimum space requirements
- GigE vision camera interface
- High frame rate for superior image acquisition and processing
- State-of-art grayscale and color CMOS image sensors
- C-mount lens support
- IP30 rated housing
- CE, FCC and RoHS compliant

HIGHLIGHTS

- GigE compatible to MX-E Series vision processors
- VGA to 5MP resolution, in both grayscale and color
- CMOS image sensors for high speed performance
- Power over Ethernet (PoE) guarantees minimum wiring and easy installation
- Compact housing (as small as 29 mm x 29 mm x 60 mm) enables mounting in space-constrained locations
- High frame rate ensures image capture at rates up to 300 frames per second (fps)
- Trigger and strobe I/O provide outstanding integration flexibility

TECHNICAL DATA

GRAYSCALE MODEL	COLOR MODEL	RESOLUTION	IMAGER	SHUTTER	FRAME RATE (FPS)	PoE
E101	E101C	640 x 480	1/4" CMOS	Global	300	▪
E151	E151C	1280 x 1024	1/2" CMOS	Global	75	▪
E182	E182C	1600X1200	1/1.8" CMOS	Global	60	▪
E193	E193C	2048 x 1536	1/1.8' CMOS	Global	35	▪
E198	E198C	2448 x 2048	2/3' CMOS	Global	20	▪

MECHANICAL DRAWINGS

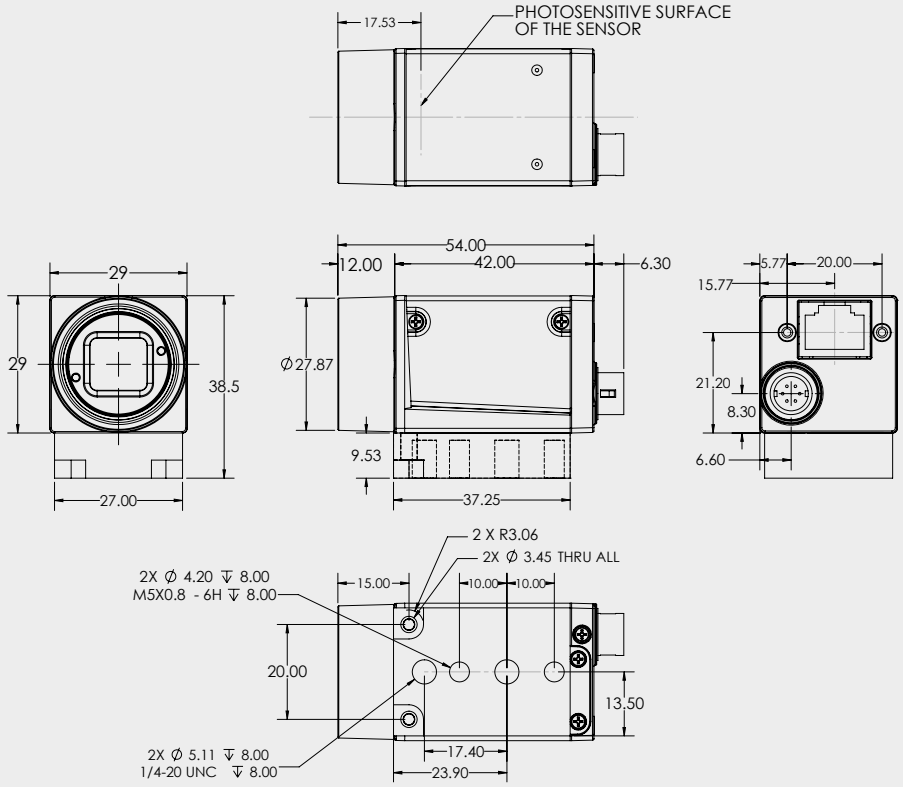

[mm]

MX-E Series

M-CAMERAS

M-Series deliver quick, easy integration, solving the most complex machine vision applications.
The unique ability to mix and match color, grayscale, multi-imager, area and linescan cameras with a MX-E vision processor allows users to define, select and deploy the perfect imaging solution for high-speed, multi-camera machine vision inspections.

M100 Series

M200 Series

M300 Series

M500 Series

BENEFITS

- GigE compatible for fast integration with MX-E Series vision processors
- Compact size fits many machine configurations
- High-speed trigger input
- High-speed strobe light output
- C-mount lens support
- IP30 rated housing
- CE, FCC and RoHS compliant

HIGHLIGHTS

- GigE compatible for easy communication to MX-E Series vision processors
- VGA to 5MP resolution, in both grayscale and color
- Camera settings fully controllable by IMPACT Software
- Power over Ethernet (PoE) reduces cabling complexity (only M1xx)
- Compact form factor (as small as 29 mm x 29 mm x 60 mm) enables mounting in space-constrained locations
- Asynchronous triggering enables each camera to independently capture images at rates up to 210 frames per second (fps)
- Trigger and strobe I/O on camera eases integration

MX-E Series

DATALOGIC

TECHNICAL SPECIFICATIONS

AREASCAN

	GRAYSCALE MODEL	COLOR MODEL	RESOLUTION	IMAGER	SHUTTER	FRAME RATE (FPS)	PoE
	M100	M100C	640 x 480	1/4" CCD	Global	100	▪
	M110	M110C	640 x 480	1/3" CCD	Global	90	▪
	M115	M115C	659 x 494	1/2" CCD	Global	100	▪
	M125	M125C	782 x 582	1/2" CCD	Global	75	▪
	M150	M150C	1296 x 966	1/3" CCD	Global	30	▪
	M180	M180C	1628 x 1236	1/1.8" CCD	Global	20	▪
	M190	M190C	2048 x 1088	2/3" CMOS	Global	50	▪
	M195	M195C	2048 x 2048	1" CMOS	Global	25	▪
	M197	M197C	2592 x 1944	1/2.5" CMOS	Rolling	14	▪
	M200	M200C	659 x 494	1/3" CCD	Global	70	
	M202	M202C	659 x 494	1/2" CCD	Global	79	
	M250	M250C	1280 x 960	1/3" CCD	Global	32	
	M295	M295C	1628 x 1236	1/1.8" CCD	Global	28	
	M300	M300C	648 x 488	1/3" CCD	Global	210	
	M330	M330C	1004 x 1004	2/3" CCD	Global	60	
	M350	M350C	1608 x 1208	1" CCD	Global	35	
	M390	M390C	2448 x 2050	2/3" CCD	Global	17	

LINESCAN

	MODEL	RESOLUTION	MAX LINE RATE	PIXEL SIZE	C-MOUNT	F-MOUNT	M42-MOUNT
	M565	2048	48 KHz	7 µm × 7 µm	▪	▪	▪
	M570	4096	24 KHz	7 µm × 7 µm		▪	▪
	M575	6144	17 KHz	7 µm × 7 µm		▪	▪
	M580	8192	12 KHz	3.5 µm × 3.5 µm		▪	▪

DIMENSIONS

M100 Series

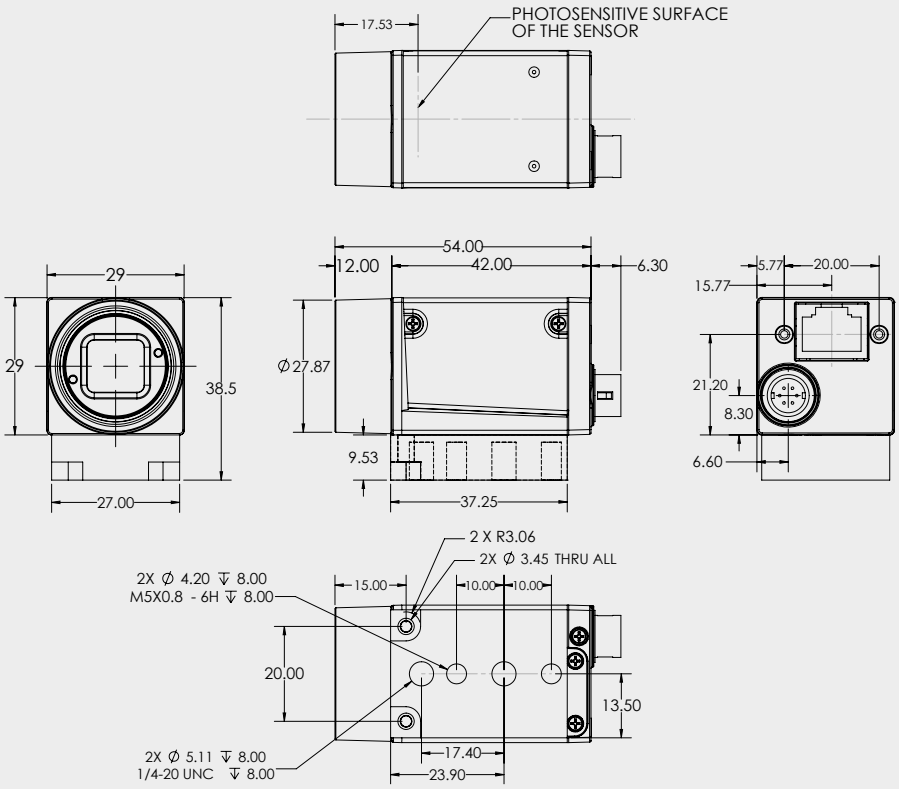

M200 Series

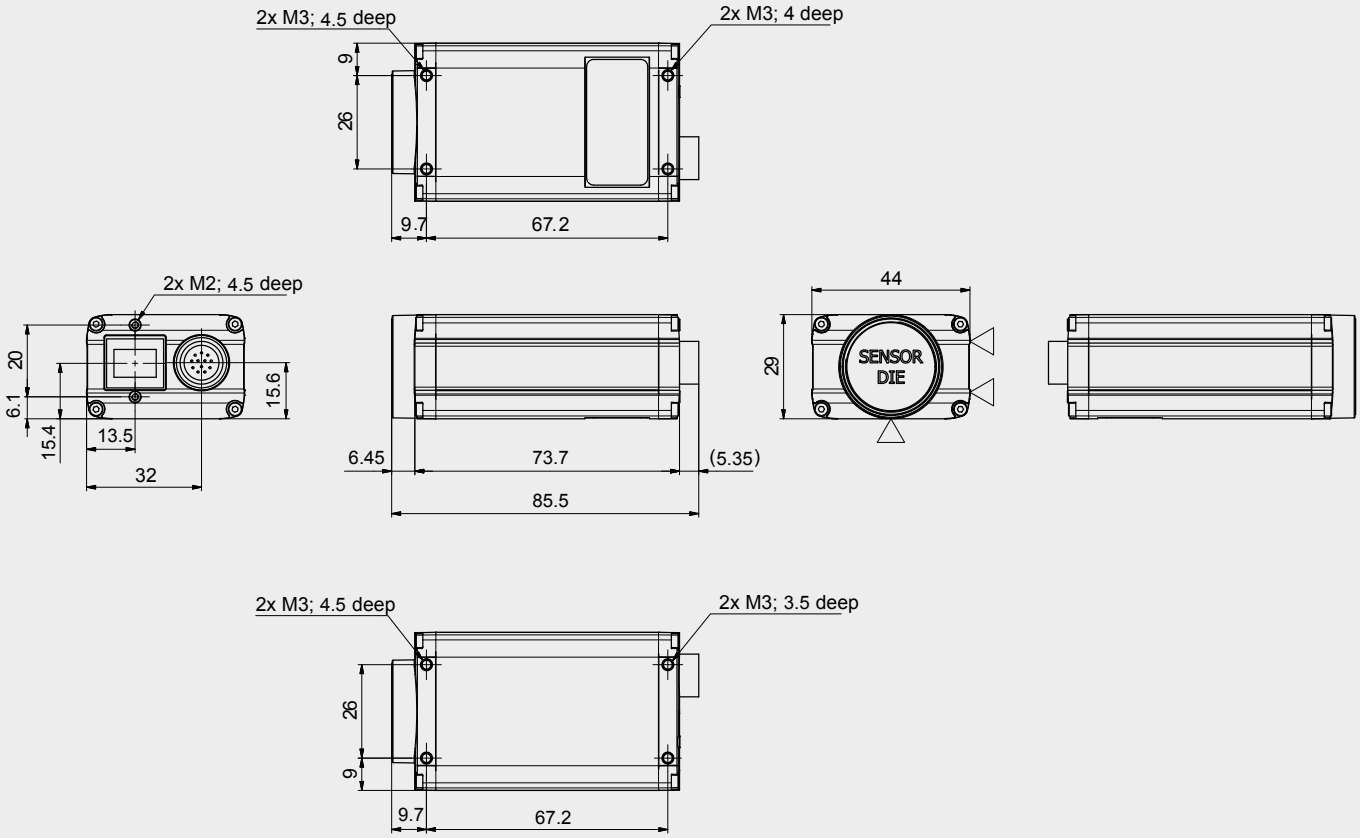

DIMENSIONS

M300 Series

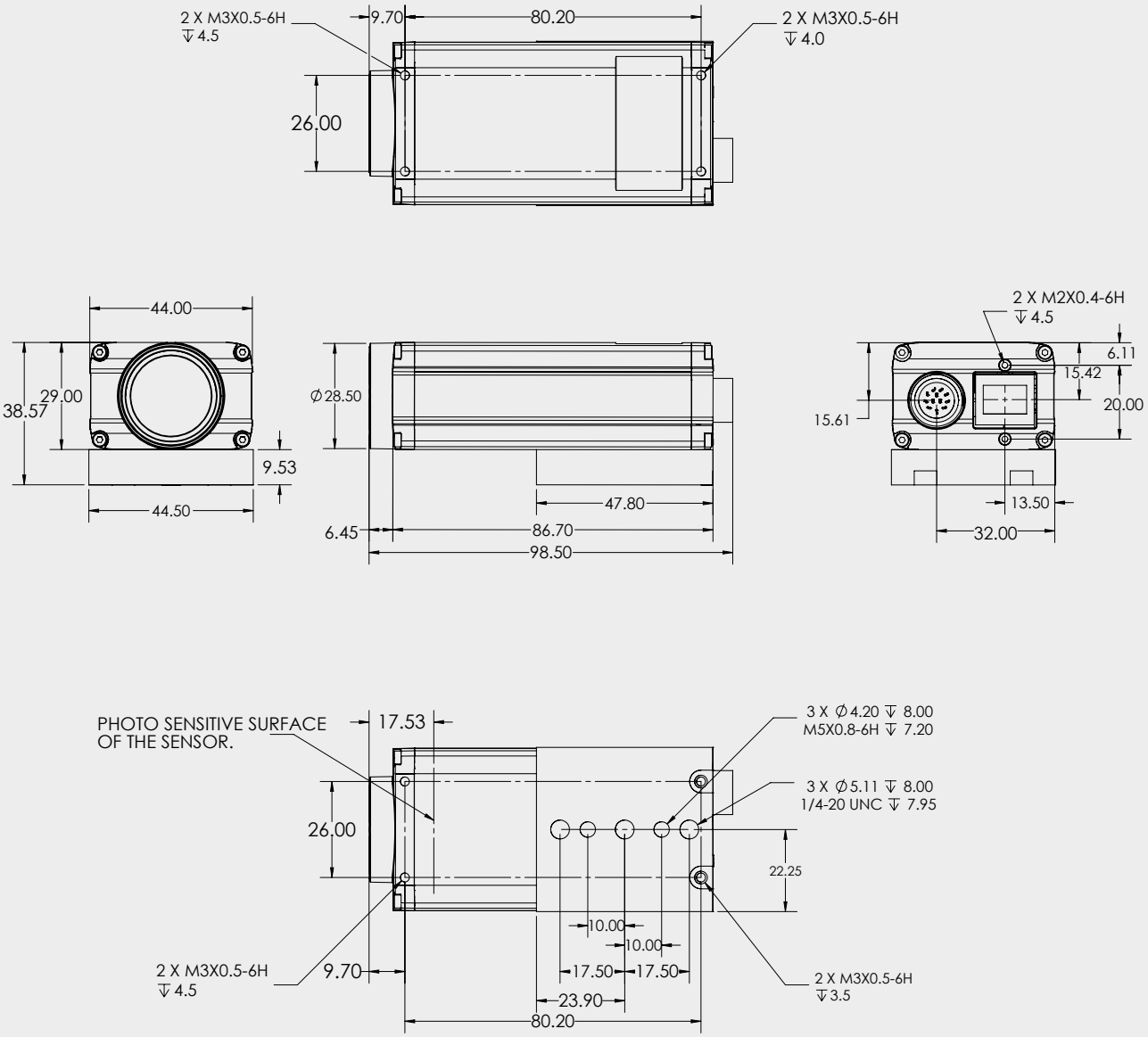

DIMENSIONS

M500 Series

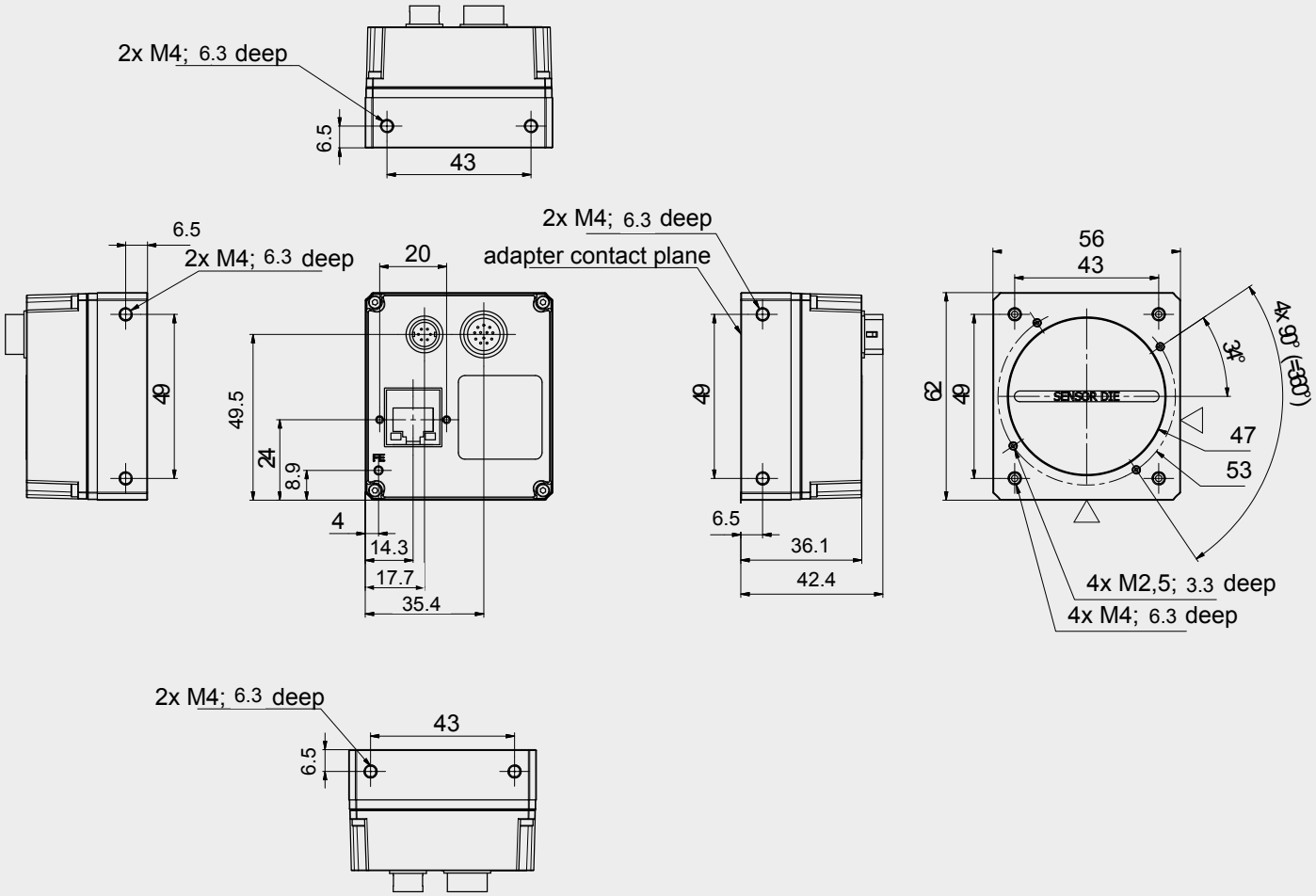

MX-E Series

DATALOGIC

MODELS

DESCRIPTION	ORDER N°
PRODUCTS	
VISION PROCESSORS	
MX-E20-2-P-1, Vision Processor, 2 ports, PNP, WES7	959912103
MX-E20-2-N-1, Vision Processor, 2 ports, NPN, WES7	959912104
MX-E40-2-P-1, Vision Processor, 2 ports, PNP, WES7	959914107
MX-E40-2-N-1, Vision Processor, 2 ports, NPN, WES7	959914108
MX-E40-4-P-1, Vision Processor, 4 ports, PNP, WES7	959914109
MX-E40-4-N-1, Vision Processor, 4 ports, NPN, WES7	959914110
MX-E80-2-P-1, Vision Processor, 2 ports, PNP, WES7	959918105
MX-E80-2-N-1, Vision Processor, 2 ports, NPN, WES7	959918106
MX-E80-4-P-1, Vision Processor, 4 ports, PNP, WES7	959918107
MX-E80-4-N-1, Vision Processor, 4 ports, NPN, WES7	959918108
DONGLES	
DONGLE, IMPACT	93ACC0185
DONGLE, IMPACT, OCR*	93ACC0186
DONGLE, IMPACT, PST*	93ACC0187
DONGLE, IMPACT, 3rd party camera*	93ACC0188
DONGLE, IMPACT, OCR, 3rd party camera*	93ACC0189
DONGLE, IMPACT, PST, 3rd party camera*	93ACC0190
DONGLE, IMPACT, PST, OCR*	93ACC0191
DONGLE, IMPACT, PST, OCR, 3rd party camera*	93ACC0192
E100 SERIES CAMERAS	
Camera, E101, Gig-E, 659 x 480, 300 FPS, Grayscale, 1/4" CMOS	959933022
Camera, E101C, Gig-E, 659 x 480, 300 FPS, Color, 1/4" CMOS	959933023
Camera, E151, Gig-E, 1280 x 1024, 75 FPS, Grayscale, 1/2" CMOS	959933024
Camera, E151C, Gig-E, 1280 x 1024, 75 FPS, Color, 1/2" CMOS	959933025
Camera, E182, Gig-E, 1600 x 1200, 60 FPS, Grayscale, 1/1.8" CMOS	959933038
Camera, E182C, Gig-E, 1600 x 1200, 60 FPS, Color, 1/1.8" CMOS	959933039
Camera, E193, Gig-E, 2048 x 1536, 35 FPS, Grayscale, 1/1.8" CMOS	959933042
Camera, E193C, Gig-E, 2048 x 1536, 35 FPS, Color, 1/1.8" CMOS	959933043
Camera, E198, Gig-E, 2448 x 2048, 20 FPS, Grayscale, 2/3" CMOS	959933044
Camera, E198C, Gig-E, 2448 x 2048, 20 FPS, Color, 2/3" CMOS	959933045
M-CAMERAS	
Camera, M100, Gig-E, 659 x 494, 100 FPS, Grayscale, 1/4" CCD	601-0351
Camera, M100C, Gig-E, 659 x 494, 100 FPS, Color, 1/4" CCD	601-0378
Camera, M110, Gig-E, 659 x 494, 90 FPS, Grayscale, 1/3" CCD	601-0423
Camera, M110C, Gig-E, 659 x 494, 90 FPS, Color, 1/3" CCD	601-0424
Camera, M115, Gig-E, 659 x 494, 100 FPS, Grayscale, 1/2" CCD	601-0450
Camera, M115C, Gig-E,659 x 494, 100 FPS, Color, 1/2" CCD	601-0451
Camera, M125, Gig-E, 782 x 582, 75 FPS, Grayscale, 1/2" CCD	601-0452
Camera, M125C, Gig-E, 782 x 582, 75 FPS, Color, 1/2" CCD	601-0453
Camera, M150, Gig-E, 1296 x 966, 30 FPS, Grayscale, 1/3" CCD	601-0352
Camera, M150C, Gig-E, 1296 x 966, 30 FPS, Color, 1/3" CCD	601-0379
Camera, M180, Gig-E, 1628 x 1236, 20 FPS, Grayscale, 1/1.8" CCD	601-0357
Camera, M180C, Gig-E, 1628 x 1236, 20 FPS, Color, 1/1.8" CCD	601-0384
Camera, M190, Gig-E, 2048 x 1088, 50 FPS, Grayscale, 2/3" CMOS	601-0454
Camera, M190C, Gig-E, 2048 x 1088, 50 FPS, Color, 2/3" CMOS	601-0455
Camera, M195, Gig-E, 2048 x 2048, 25 FPS, Grayscale, 1" CMOS	601-0456
Camera, M195C, Gig-E, 2048 x 2048, 25 FPS, Color, 1" CMOS	601-0457
Camera, M197, Gig-E, 2592 x 1944, 14 FPS, Grayscale, 1/2.5" CMOS	959931010
Camera, M197C, Gig-E, 2592x1944, 14 FPS, Color, 1/2.5" CMOS	959931011
Camera, M200, Gig-E, 659 x 494, 70 FPS, Grayscale, 1/3" CCD	601-0358
Camera, M200C, Gig-E, 659 x 494, 70 FPS, Color, 1/3" CCD	601-0385
Camera, M202, Gig-E, 659 x 494, 79 FPS, Grayscale, 1/2" CCD	601-0359
Camera, M202C, Gig-E, 659 x 494, 79 FPS, Color, 1/2" CCD	601-0386
Camera, M250, Gig-E, 1296 x 966, 32 FPS, Grayscale, 1/3" CCD	601-0362
Camera, M250C, Gig-E, 1296 x 966, 32 FPS, Color, 1/3" CCD	601-0389
Camera, M295, Gig-E, 1628 x 1236, 28 FPS, Grayscale, 1/1.8" CCD	601-0420
Camera, M295C, Gig-E, 1628 x 1236, 28 FPS, Color, 1/1.8" CCD	601-0421
Camera, M300, Gig-E, 648 x 488, 210 FPS, Grayscale, 1/3" CCD	601-0354
Camera, M300C, Gig-E, 648 x 488, 210 FPS, Color, 1/3" CCD	601-0381
Camera, M330, Gig-E, 1004 x 1004, 60 FPS, Grayscale, 2/3" CCD	601-0364
Camera, M330C, Gig-E, 1004 x 1004, 60 FPS, Color, 2/3" CCD	601-0391
Camera, M350, Gig-E, 1608 x 1208, 35 FPS, Grayscale, 1" CCD	601-0365
Camera, M350C, Gig-E, 1608 x 1208, 35 FPS, Color, 1" CCD	601-0392
Camera, M390, Gig-E, 2448 x 2050 (5MP), 17 FPS, Grayscale, 2/3" CCD	601-0355
Camera, M390C, Gig-E, 2448 x 2050 (5MP), 17 FPS, Color, 2/3" CCD	601-0382
Camera, M565, Gig-E, 2048 Linescan, 51KHz, Grayscale	959931002
Camera, M570, Gig-E, 4096 Linescan, 26KHz, Grayscale	959931003
Camera, M575, Gig-E, 6144 Linescan, 17KHz, Grayscale	959933020
Camera, M580, Gig-E, 8192 Linescan, 12KHz, Grayscale	959933021

* add-on functionalities are enabled on all physical camera ports

ACCESSORIES

DESCRIPTION	ORDER N°
I/O Cables, MX Series Processors	
Cable, I/O, MX Series, Processor to Terminal Block, .75 Meter	606-0675-.75
Cable, I/O, MX Series, Processor to Terminal Block, 1.5 Meter	606-0675-1.5
Cable, I/O, MX Series, Processor to Terminal Block, 3 Meter	606-0675-3
Cable, I/O, MX Series, Processor to Terminal Block, 4.5 Meter	606-0675-4.5
Cable, I/O, MX Series, Processor to Terminal Block, 7.5 Meter	606-0675-7.5
Cable, I/O, MX Series, Processor to Terminal Block, 15 Meter	95A906060
I/O Boards, MX Series Processors	
I/O Board, MX-Series Processors, Female DB37, DIN Rail Mountable, no isolation	248-0110
Power and I/O Cables to Terminal Block, M and E Series Cameras	
Cable, Camera I/O, M1xx, E1xx, M5xx, 6 pin, 2 Meter, Camera to Terminal Block	606-0674-02
Cable, Camera I/O, M1xx, E1xx, M5xx, 6 pin, 3 Meter, Camera to Terminal Block	606-0674-03
Cable, Camera I/O, M1xx, E1xx, M5xx,6 pin, 5 Meter, Camera to Terminal Block	606-0674-05
Cable, Camera I/O, M1xx, E1xx, M5xx, 6 pin, 10 Meter, Camera to Terminal Block	606-0674-10
Cable, Camera I/O, M1xx, E1xx, M5xx, 6 pin, 15 Meter, Camera to Terminal Block	606-0674-15
Cable, Camera I/O, M1xx, E1xx, M5xx, 6 pin, 20 Meter, Camera to Terminal Block	606-0674-20
Cable, Camera Power and I/O, M2xx, M3xx and M5xx, 12 pin, 2 Meter, Camera to Terminal Block	606-0673-02
Cable, Camera Power and I/O, M2xx, M3xx and M5xx, 12 pin, 3 Meter, Camera to Terminal Block	606-0673-03
Cable, Camera Power and I/O, M2xx, M3xx and M5xx, 12 pin, 5 Meter, Camera to Terminal Block	606-0673-05
Cable, Camera Power and I/O, M2xx, M3xx and M5xx, 12 pin, 10 Meter, Camera to Terminal Block	606-0673-10
Cable, Camera Power and I/O, M2xx, M3xx and M5xx, 12 pin, 15 Meter, Camera to Terminal Block	606-0673-15
Power and I/O Cables Unterminated, M and E Series Cameras	
M1xx, E1xx Cameras I/O Cable, 6 pin, 2 Meter, pigtail	606-0672-02
M1xx, E1xx Cameras I/O Cable, 6 pin, 3 Meter, pigtail	606-0672-03
M1xx, E1xx Cameras I/O Cable, 6 pin, 5 Meter, pigtail	606-0672-05
M1xx, E1xx Cameras I/O Cable, 6 pin, 10 Meter, pigtail	606-0672-10
M2xx and M3xx Camera Power and I/O Cable, 12 pin, 2 Meter, pigtail	606-0671-02
M2xx and M3xx Camera Power and I/O Cable, 12 pin, 3 Meter, pigtail	606-0671-03
M2xx and M3xx Camera Power and I/O Cable, 12 pin, 5 Meter, pigtail	606-0671-05
M2xx and M3xx Camera Power and I/O Cable, 12 pin, 10 Meter, pigtail	606-0671-10
M2xx and M3xx Camera Power and I/O Cable, 12 pin, 15 Meter, pigtail	606-0671-15
I/O Boards, M and E Series Cameras	
I/O Board, M1xx, E1xx Cameras, 1 Input / 1 Output, Female DB9, DIN Rail Mountable, no isolation	248-0140
I/O Board, M1xx, E1xx Cameras, w / isolation	661-0399
I/O Board, M2xx and M3xx Cameras, Female HD15, DIN Rail Mountable, no isolation	248-0141
I/O Board, M2xx, M3xx, & Aviator Camera, w / isolation	661-0400
I/O Board, M5xx Camera, w / isolation	661-0401
Brackets, M and E Series Cameras	
Camera Mount, M1xx, E1xx Cameras	95A903029
Camera Mount, M2xx and M3xx Cameras	381-1354
Ethernet Cables, M and E Series Cameras	
Cable, Gig-E, CAT6, 2 Meter	606-0677-02
Cable, Gig-E, CAT6, 3 Meter	606-0677-03
Cable, Gig-E, CAT6, 5 Meter	606-0677-05
Cable, Gig-E, CAT6, 7 Meter	606-0677-07
Cable, Gig-E, CAT6, 10 Meter	606-0677-10
Cable, Gig-E, CAT6, 15 Meter	606-0677-15
Cable, Gig-E, CAT6, 25 Meter	606-0677-25
Cable, Gig-E, CAT6, 50 Meter	606-0677-50
Licenses, MX-E Series Processors	
License, Pattern Sorting Tool, Processor	95A906545
License, 3rd Party Cameras, Processor	95A906539
License, OCR, Processor	95A906998

Rev. 02, 05/2017

© 2016 Datalogic Automation S.r.l.- ALL RIGHTS RESERVED.- Protected to the fullest extent under U.S. and international laws. Copying, or altering of this document is prohibited without express written consent from Datalogic Automation S.r.l. Datalogic and the Datalogic logo are registered trademarks of Datalogic S.p.A. in many countries, including the U.S.A. and the E.U.
All brand and product names mentioned herein are for identification purposes only and may be trademarks or registered trademarks of their respective owners.
Datalogic shall not be liable for technical or editorial errors or omissions contained herein, nor for incidental or consequential damages resulting from the use of this material.