LASER SENTINEL™ ENHANCED

DATALOGIC

Safety laser scanner based on Time Of Flight measurement
More than 72 m² safely monitored, with 5.5 m over 275°
High detection performances in compact size
Advanced dust filtering
Easy programming with intuitive Graphic User Interface

- Dimensions (w,d,h): 102 , 112.5, 152 mm
- I/O connection with standard M12 cables
- Up to 3 simultaenous safety zones
- 2 Warning zones up to 40 m
- 30/40/50/70/150 mm selectable detection capability
- Up to 70 zone sets
- Partial dynamic muting
- Metal brackets allowing full orientation and fast replacement
- Advanced measurement data protocol
- Colour graphic display for monitoring and diagnostics
- Speed measurement with encoder inputs

APPLICATIONS

- Robot cells (pick and place, inspection, testing, welding, etc)
- Palletizers / depalletizers
- Open machinery, process lines
- Automated Guided Vehicles (AGV)
- Automated Guided Carts (AGC)
- Mobile Industrial Robots

INDUSTRIES

- Automotive
- Material handling
- Secondary Packaging
- Food
- Wood
- Ceramics

	FINGER	HAND	ARM	BODY
Type 3		x	x	x

SLS M 5 - E - 0812 - E

MODEL	
SA	Standalone
M	Master
R	Slave (or Remote)

MAX SAFETY RANGE	
5	5.5 m
3	3 m

ENCODER INPUTS	
E	Encoder inputs on secondary connector
--	Not present

I/O CONNECTORS	
08	M12 8-pin male
0812	M12 8-pin male OR M12 12-pin male
1708	M12 17-pin male AND M12 8-pin male

ENHANCED VERSION	
E	Master/Slave Enhanced version
--	Standalone Enhanced version (*)

(*) only for models produced after 31/01/2020

TECHNICAL DATA

	SLS-SA3-08 SLS-SA5-08	SLS-M3-0812-E SLS-M5-0812-E		SLS-M3-1708-E SLS-M5-1708-E		SLS-M5-E-1708-E	SLS-R3-E SLS-R5-E
Connector used	**M12 8-pin**	**M12 8-pin**	**M12 12-pin**	**M12 17-pin**	**M12 17-pin + M12 8-pin**	**M12 17-pin + M12 8-pin high speed**	**N/A**
	GENERAL DATA						
Type (EN61496-1)	3						
PL (EN ISO 13849-1)	d						
SIL (IEC 61508)	2						
	DETECTION DATA						
Detection capability	30/40/50/70/150 mm selectable						
Angular resolution	0,1°						
Safety zone operating range	See Safety operating range table						
Warning zone max. operating range	40 m						
Max. number of symultaneous safety zones	1	1	2	3			Depending on connected Master
Max. number of symultaneous warning zones	2	1	2	2 (if safety zones < 3) 1 (if safety zones = 3)			Depending on connected Master
Max. opening angle	275°						
Tolerance zone	100 mm						
	ELECTRICAL DATA						
Power supply (Vdd)	24 Vdc ± 20%						
Output current	0.25 A max / each OSSD						N/A
Output Capacitive load	2.2 uF @ 24Vdc max						N/A
Input Load current	6 ... 15 mA						N/A
Input saturation voltage	> 15 V						N/A
Input Capacitive Load	22 uF						N/A
	MECHANICAL AND ENVIRONMENTAL DATA						
Operating temperature	-10 ...+50 °C						
Storage temperature	-20 ... 70°C						
Humidity	15 ... 95 % (no condensation)						
Mechanical protection	IP 65 (EN 60529)						
Housing material	Painted Aluminium, Polycarbonate						
Window material	PMMA						
	INPUTS/OUTPUTS CONFIGURATION DATA						
Connector	**M12 8-pin**	**M12 8-pin**	**M12 12-pin**	**M12 17-pin**	**M12 17-pin + M12 8-pin**	**M12 17-pin + M12 8-pin**	
Safety Outputs (OSSDs)	1 x 2	1 x 2	2 x 2	3 x 2	3 x 2	3 x 2	N/A
Configurable Inputs	0	2	1	4	12	8	N/A
Configurable Outputs	0	0	v	2	2	2	N/A
Configurable Inputs/Output	3	1	4	2	2	2	N/A
High speed inputs (100kHz)	N/A					4	N/A
Total configurable I/O	5	5	7	10	18	18	N/A
	CONFIGURABLE PARAMETERS						
Response time							
for main unit	Min: 62 ms; Max: 482 ms						
for any additional slave unit	10 ms						
Connector used	M12 8-pin	M12 8-pin	M12 12-pin	M12 17-pin	M12 17-pin + M12 8-pin	M12 17-pin + M12 8-pin high speed	
Max. Zone sets number in any activation order (*1):							
with 1 safety zone	3	3	10	20	70	70	N/A
with 1 safety zone + 1 warning zone	2	2	6	20	70	70	
with 1 safety zone + 2 warning zones	N/A	N/A	3	20	70	70	
with 2 safety zones	N/A	N/A	3	20	70	70	
with 2 safety zones + 1 warning zone	N/A	N/A	2	10	70	70	
with 2 safety zones + 2 warning zones	N/A	N/A	1	6	70	70	
with 3 safety zones	N/A	N/A	N/A	6	70	70	
Max. Zone sets number in a particular activation order with 1 safety zone (*2):	6	N/A					
Zone set input switching time	Min: 30 ms; Max: 5000 ms						
	FUNCTIONS						
Manual /automatic restart	Yes						N/A
Reset (power cycle)	Yes						
EDM (External Device Monitoring)	Yes						
Total Muting (monodirectional or bidirectional)	Yes						
Partial muting, dynamic for 1st OSSDs couple	Yes						
Reference Points	Yes						
Override	Yes (*3)	Yes					
Muting Lamp	Yes (*3)	Yes					
Muting Enable	Yes (*3)	Yes					
Clean Window Alarm	Yes						
Generic Fault Alarm	Yes						
Shut off	Yes						
Advanced measurement data	Yes (*4)	Yes (*5)					
Measurement data max. angolar resolution	0.1°						0.5°
	APPLICATIONS						
Horizontal static	Yes						
Vertical static	Yes						
Moving (simple AGVs)	Yes						
Moving (medium complexity AGVs)	No	Yes					

NOTES

(*1) The max number of zone sets switching is reached when all inputs are used for zone set switching. Using 8 inputs or encoder speed measurement the max. number of zone set of 70 can be reached.

(*2) With 1 safety zone only, up to 3 zone sets are available in any activation order. Up to 6 are available only using some allowed activation order. Refer to Manual and GUI for details.

(*3) Ovverride input, Muting Enable input and Muting Lamp output on SLS-SAx are mutually exclusive

(*4) Using the programming connector on the front of the device

(*5) Using the rotating connector in the back of the device

(*6) Only using 12-pin connector

(*7) To use more than 2 OSSDs, they have to be selected between configurable outputs

SAFETY OPERATING RANGE

	SLS-SA3-08 SLS-M3-xxxx-E SLS-R3-E	SLS-SA5-08 SLS-M5-xxxx-E SLS-M5-E-xxxx-E SLS-R5-E
Detection Capability	Safety Operating Range	
30 mm	0.05 ... 2.5 m	
40 mm	0.05 ... 3 m	0.05 ... 3 m
50 mm		0.05 ... 4 m
70 mm		0.05 ... 5.5 m
150 mm		

CONNECTIONS

CONNECTOR	CHARACTERISTICS	SLS-SAx	SLS-Mx-0812-E	SLS-Mx-(E-)-1708-E	SLS-Rx-E
A	M12 4-pins female	Ethernet port	Ethernet port	Ethernet port	N/A
B	M12 8-pins female	Not Present	Safe Connection to Slave device	Safe Connection to Slave device	Safe connection to next Slave device
D	M12 12 poles male	Not Present	Power and digital I/O in alternative to D	N/A	N/A
C	M12 8 poles male	Power supply and digital I/O	Power and digital I/O in alternative to C	N/A	N/A
E	M12 8-pins female	N/A	N/A	N/A	Safe connection to Master or previous Slave device
F	M12 17-pins male	N/A	N/A	Power and digital I/O alone or in combination with D	N/A
G	M12 8 poles male	N/A	N/A	Digital inputs in addition to F	N/A

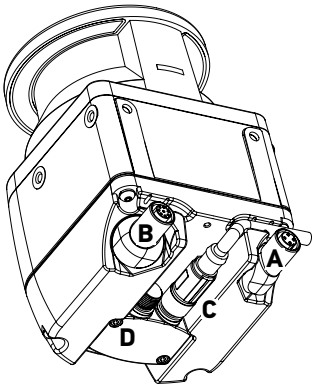

SLS-x (Master)

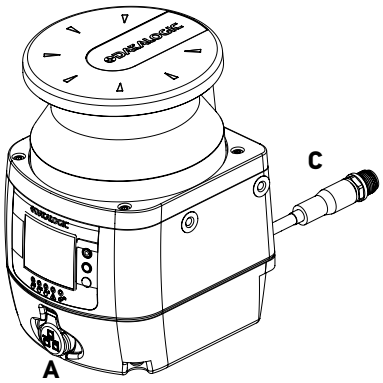

SLS-Sx (Standalone)

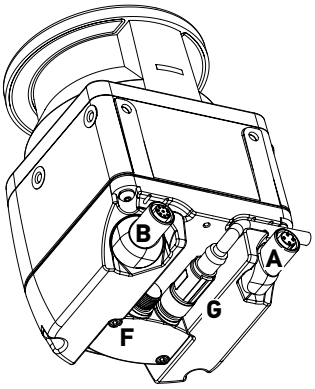

SLS-Mx-(E-)1708-E

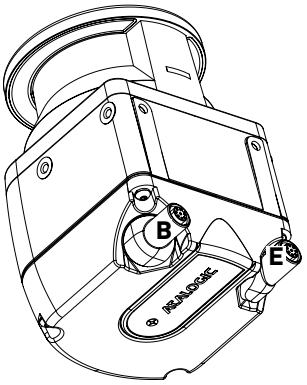

SLS-Rx-E

C CONNECTOR (M12, 8-Pins)				
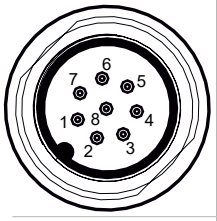	SIGNAL	DESCRIPTION	COLOR	PIN NUMBER
POWER	POWER SUPPLY	24Vdc	BROWN	2
	GND_ISO	0 V	BLUE	7
INPUT/OUTPUT	MULTI IN/OUT	Selectable by GUI	WHITE	1
	MULTI IN/OUT (*)	Selectable by GUI	GREEN	3
	MULTI IN/OUT (*)	Selectable by GUI	YELLOW	4
SAFETY OUTPUTS	OSSD11	Safety Output	GRAY	5
	OSSD12	Safety Output	PINK	6
OTHER	F_EARTH	Functional Earth	RED	8

NOTE

(*) Only MULTI IN and SLS-Mx

D CONNECTOR (M12, 12-Pins)

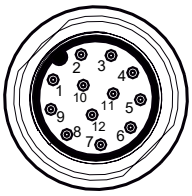

	SIGNAL	DESCRIPTION	COLOR	PIN NUMBER
POWER	POWER SUPPLY	24Vdc	BROWN	1
	POWER SUPPLY	24Vdc	GREEN	4
	GND_ISO	0 V	BLUE	2
	GND_ISO	0 V	YELLOW	6
INPUT	MULTI IN	Selectable by GUI	WHITE	3
INPUT/OUTPUT	MULTI IN/OUT	Selectable by GUI	BLACK	7
	MULTI IN/OUT	Selectable by GUI	RED	9
	MULTI IN/OUT	Selectable by GUI	VIOLET	10
	MULTI IN/OUT	Selectable by GUI	GREY/PINK	11
SAFETY OUTPUTS	OSSD11	Safety Output	GRAY	8
	OSSD12	Safety Output	PINK	5
OTHER	F_EARTH	Functional Earth	RED/BLUE	12

F CONNECTOR (M12, 17-Pins)

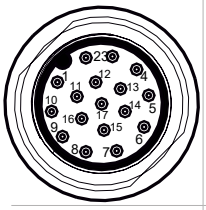

	SIGNAL	DESCRIPTION	COLOR	PIN NUMBER
POWER	POWER SUPPLY	24Vdc	BROWN	1
	POWER SUPPLY	24Vdc	BROWN	10
	POWER SUPPLY	24Vdc	BROWN	11
	GND_ISO	0 V	BLUE	2
	GND_ISO	0 V	BLUE	3
	GND_ISO	0 V	BLUE	12
INPUT	MULTI IN	Selectable by GUI	ORANGE	6
	MULTI IN	Selectable by GUI	BLACK	7
	MULTI IN	Selectable by GUI	WHITE	14
	MULTI IN	Selectable by GUI	VIOLET	17
OUTPUT	MULTI OUT	Selectable by GUI	GREEN	4
	MULTI OUT	Selectable by GUI	YELLOW	15
INPUT/OUTPUT	MULTI IN/OUT	Selectable by GUI	WHITE/BLACK	5
	MULTI IN/OUT	Selectable by GUI	RED	9
SAFETY OUTPUTS	OSSD11	Safety Output	GRAY	13
	OSSD12	Safety Output	PINK	8
OTHER	F_EARTH	Functional Earth	YELLOW/GREEN	16

G CONNECTOR (M12, 8-Pins)

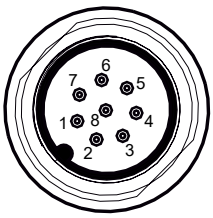

	SIGNAL	DESCRIPTION	COLOR	PIN NUMBER
HIGH SPEED INPUTS (*)	HIGH SPEED INPUT	Encoder input 11	GRAY	4
	HIGH SPEED INPUT	Encoder input 12	PINK	6
	HIGH SPEED INPUT	Encoder input 21	YELLOW	5
	HIGH SPEED INPUT	Encoder input 22	RED	8
INPUTS	MULTI IN	Selectable by GUI	GREEN	3
	MULTI IN	Selectable by GUI	BLUE	7
	MULTI IN	Selectable by GUI	BROWN	2
	MULTI IN	Selectable by GUI	WHITE	1

NOTE

(*) Only for SLS-M5-E-1708-E. Otherwise they are standard digital inputs selectable by GUI

SELECTABLE INPUTS AND OUPUTS								
IN /OUT	Signal	SLS-Sax	SLS-Mx-0812-E		SLS-Mx-1708-E		SLS-M5-E-1708-E	NOTES
		8-pin	8-pin	12 pin	17-pin	17 + 8 pin	17 + 8 pin	
MULTI IN	Reset	YES						
	Restart	YES						
	Reset/Restart	YES						
	EDM	YES						
	Area Switch 1	YES						
	Area Switch 2	YES						
	Area Switch 3	YES						
	Area Switch 4	N/A		YES				
	Area Switch 5	N/A		YES				
	Muting Enable 1	YES						
	Muting 11	YES						In order to activate muting, both muting inputs must be used
	Muting 12	YES						
	Override 11	YES						
	Override 12	YES						
	Muting Enable 2	N/A		YES				
	Muting 21	N/A		YES				In order to activate muting, both muting inputs must be used
	Muting 22	N/A		YES				
	Override 21	N/A		YES				
	Override 22	N/A		YES				
MULTI OUT	Warning 1	YES						
	Warning 2	YES	NO	YES				
	Muting lamp 1	YES						Can be used in combination with muting function
	Muting lamp 2	N/A		YES				
	Override status 1	YES						
	Override status 2	N/A		YES				
	Alarm 1	YES						Clean Window Alarm
	Alarm 2	YES						General Fault Alarm
OSSDs	OSSD 11	YES						
	OSSD 12	YES						
	OSSD 21	N/A		YES				
	OSSD 22	N/A		YES				
	OSSD 31	N/A			YES			
	OSSD 32	N/A			YES			

DIMENSIONS

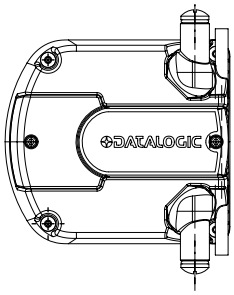

SLS-Mx

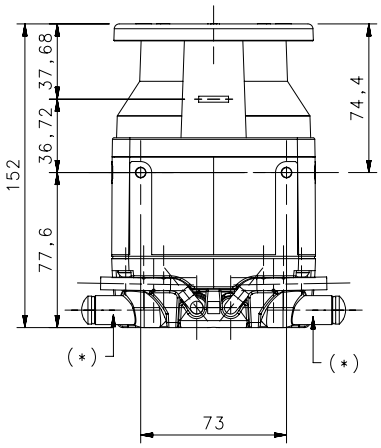

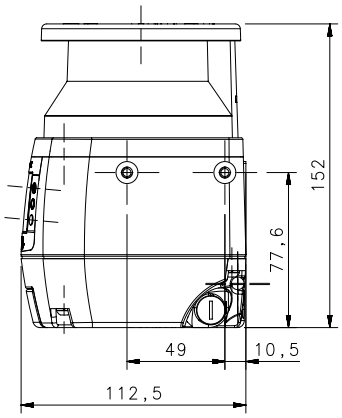

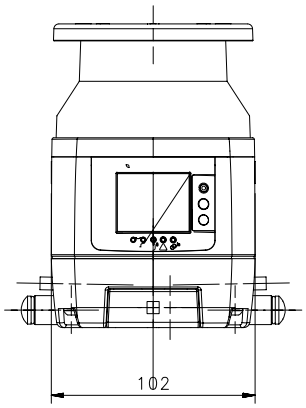

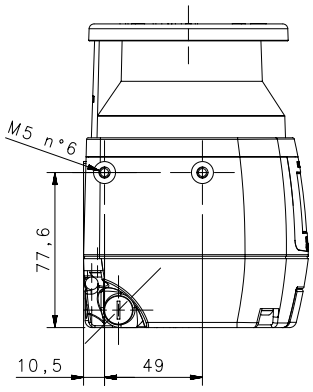

* rotating connectors can be positioned alternatively along x, y and z axis

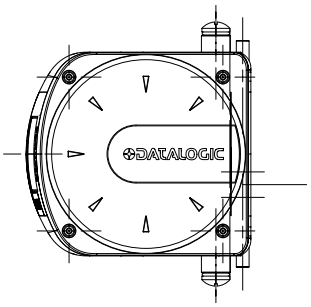

SLS-Mx WITH BRACKETS

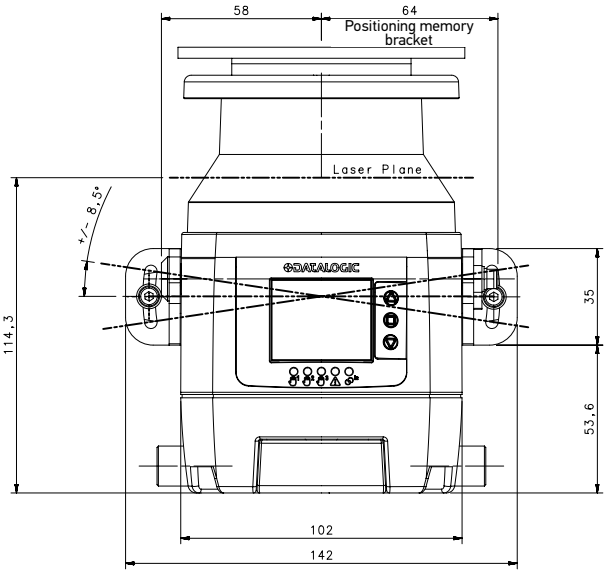

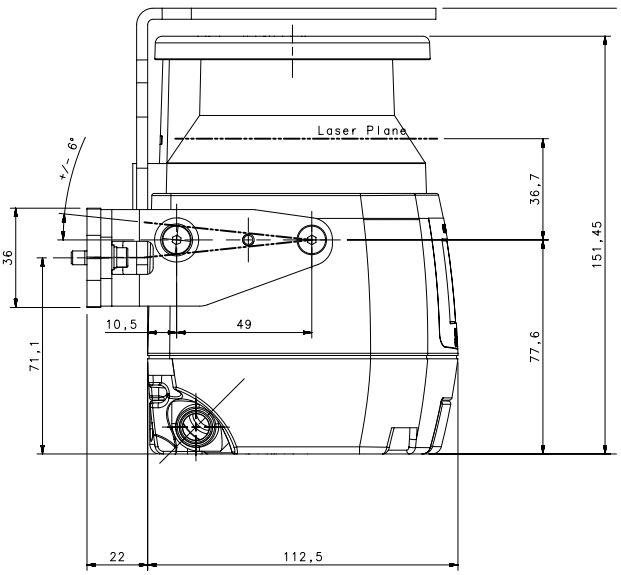

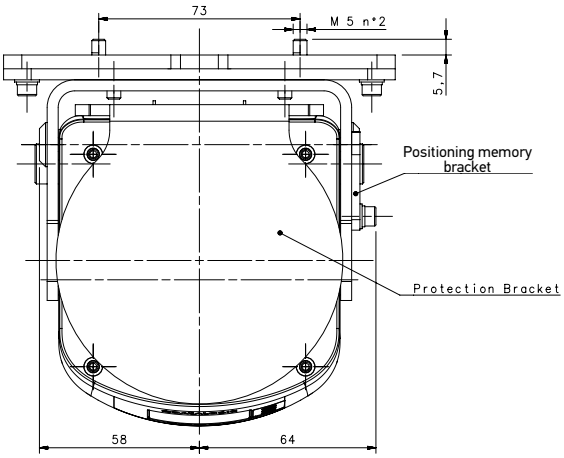

SLS-SAx

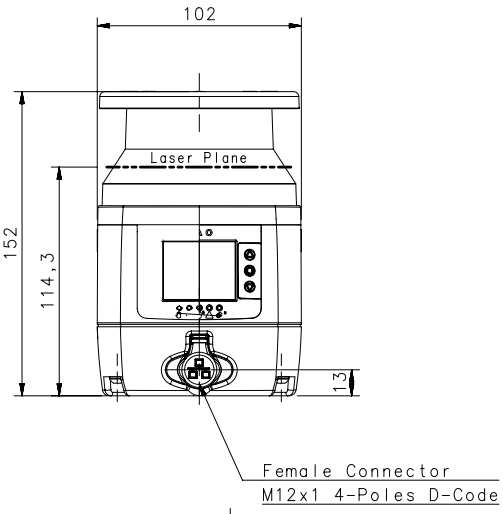

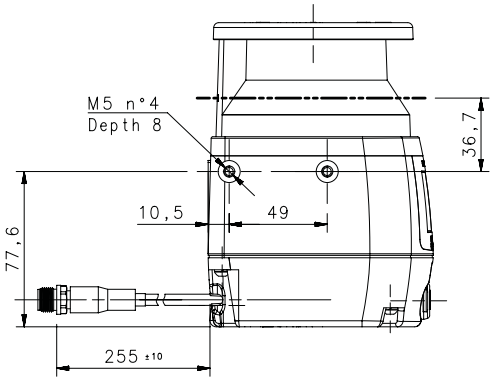

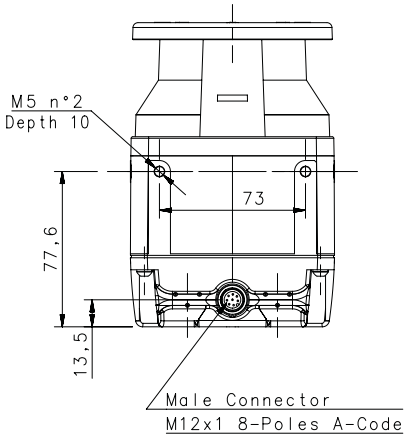

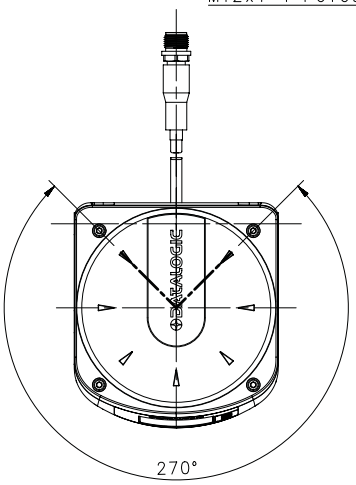

DIMENSIONS

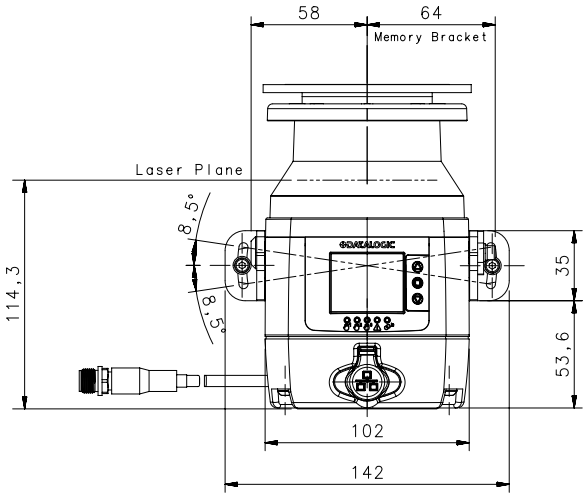

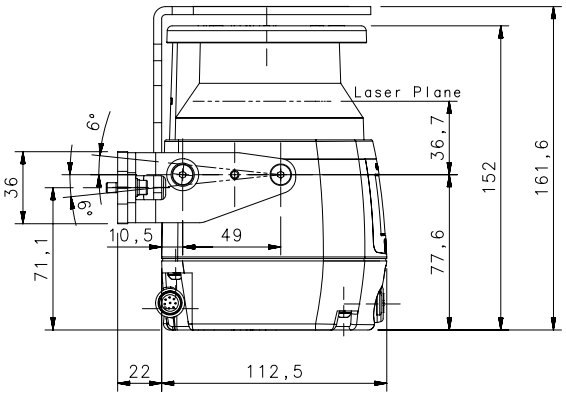

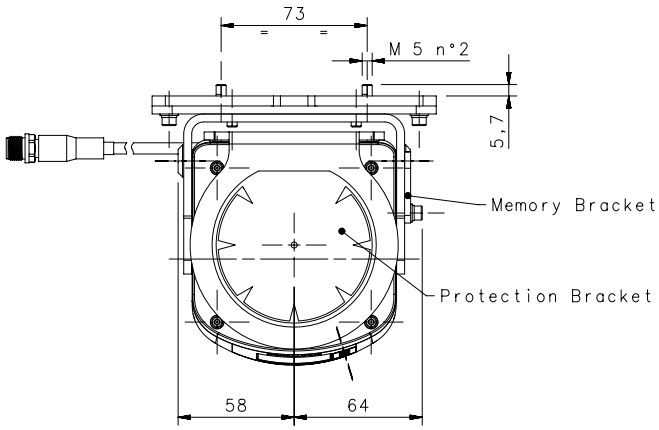

FIXING
N°2 Holes M5
Depth □6 mm
Drilling Distance 73 mm

SLS-Rx

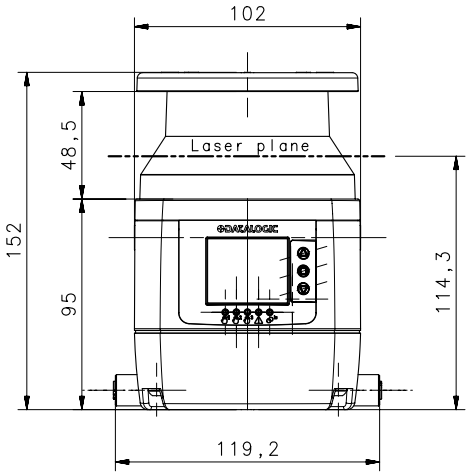

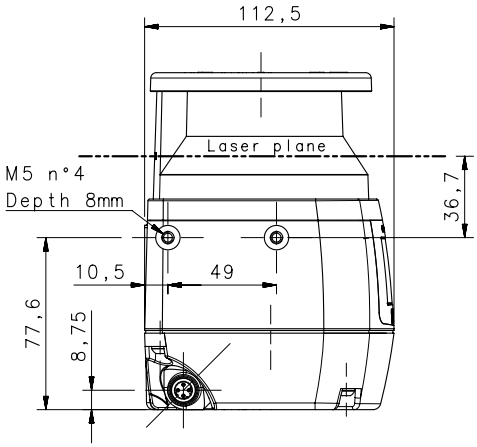

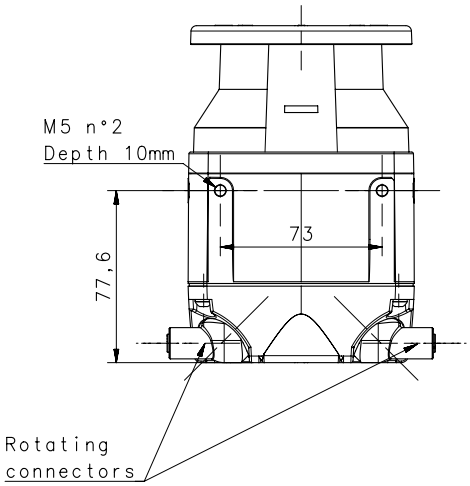

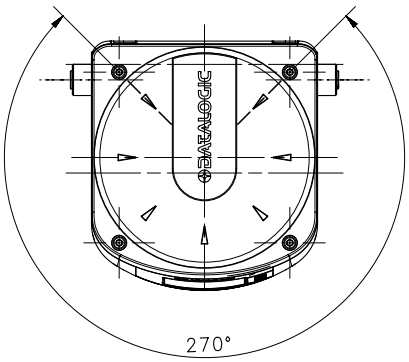

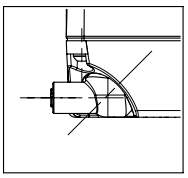

Rotating connectors 120°

MODEL SELECTION - ORDER INFORMATION

	MODEL	PRODUCT DESCRIPTION	ORDER NO.
STANDALONE	SLS-SA3-08	Standalone 3m 6 zone sets enhanced	958001080
	SLS-SA5-08	Standalone 5.5m 6 zone sets enhanced	958001090
MASTER	SLS-M3-0812-E	Master 3m 10 zone sets enhanced	958001020
	SLS-M5-0812-E	Master 5.5m 10 zone sets enhanced	958001110
	SLS-M3-1708-E	Master 3m 70 zone sets enhanced	958001010
	SLS-M5-1708-E	Master 5.5m 70 zone sets enhanced	958001030
	SLS-M5-E-1708-E	Master 5.5m encoder 70 zone sets enhanced	958001050
SLAVE	SLS-R3-E	Remote 3m enhanced	958001060
	SLS-R5-E	Remote 5.5m enhanced	958001120

NOTE: the standalone models have enhanced features if produced after 31.01.2020

ACCESSORIES

	SLS-B5 / SLS-SAx	ORDER NUMBER
	BRACKETS	
Complete bracket system	SLS-BRACKET-A	95ASE2920
Pitch regulation bracket system	SLS-BRACKET-B	95ASE2930
Head protective bracket	SLS-BRACKET-C	95ASE2940
	SAFETY UNITS	
Safety Unit	SE-SR2	95ACC6170
	MAINTENANCE ACCESSORIES	
Replacement window	SLS-WINDOW (*1)	95ASE2971
Memory group M12 8/12 pins	SLS-MG-0812 (*2)	95ASE2960
Memory group M12 17/8 pins	SLS-MG-1708 (*3)	95ASE2950
Liquid cleaner in spray bottle (1 lt)	SLS-CLEANER	95ASE2990
Cleaning cloth (22 cm x 22 cm), 100 pcs.	SLS-CLOTH	95ASE3000

Note

*1) The replacement of window is available only for SLS-Mx-xxxx-E, SLS-Rx-E (Enhanced models) and SLS-SAx produced after 31.1.2020

*2) Only for SLS-Mx-0812-E

*3) Only for SLS-Mx-1708-E and SLS-Mx-E-1708-E

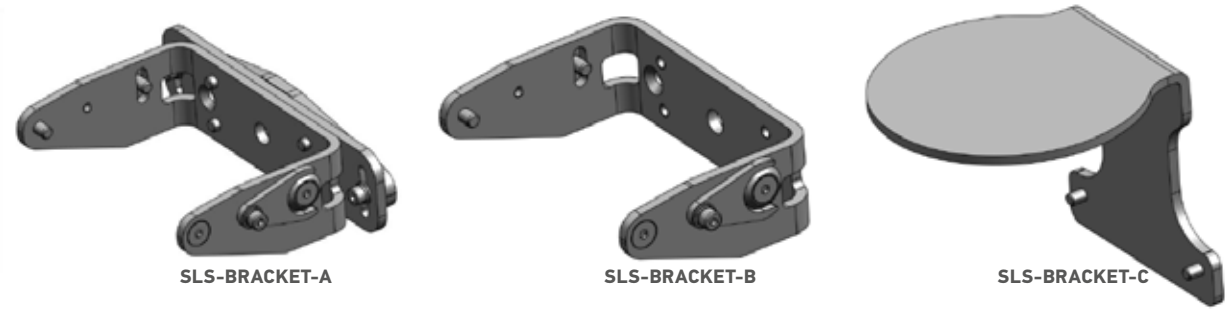

SLS-BRACKET-A SLS-BRACKET-B SLS-BRACKET-C

CABLES

	MODEL	1st end	2nd end	LENGHT	CODE
MAIN CABLES	CS-A1-06-U-03	8 pin female	free wires	3 m	95ASE1220
	CS-A1-06-U-05			5 m	95ASE1230
	CS-A1-06-U-10			10 m	95ASE1240
	CS-A1-06-U-15			15 m	95ASE1250
	CS-A1-06-U-25			25 m	95ASE1260
	CS-A1-10-U-03	12 pin female	free wires	3 m	95A252720
	CS-A1-10-U-05			5 m	95A252730
	CS-A1-10-U-10			10 m	95A252740
	CS-A1-10-U-15			15 m	95A252750
	CS-A1-10-U-25			25 m	95A252760
	CS-A1-15-U-03	17 pin female	free wires	3 m	95ASE3010
	CS-A1-15-U-05			5 m	95ASE3020
	CS-A1-15-U-10			10 m	95ASE3030
	CS-A1-15-U-15			15 m	95ASE3040
	CS-A1-15-U-25			25 m	95ASE3050
ETHERNET TO HOST CABLES	CAB-ETH-M01 M12-IP67 ETHERNET CAB. (1M)	4 pin male	RJ45	1 m	93A051346
	CAB-ETH-M03 M12-IP67 ETHERNET CAB. (3M)			3 m	93A051347
	CAB-ETH-M05 M12-IP67 ETHERNET CAB. (5M)			5 m	93A051348
	CAB-ETH-M10 M12-IP67 ETHERNET CAB. (10M)			10 m	93A051391
CABLES TO REMOTE	SLS-CABLE-R-5	8 pin male	8 pin male	5 m	95ASE2890
	SLS-CABLE-R-10			10 m	95ASE2900
	SLS-CABLE-R-20			20 m	95ASE2910

NOTES

ETHERNET TO HOST CABLES are used for programming and monitoring the device with DL Sentinel, and for reading the measurement data.
CABLES TO REMOTE are used to connect the Master models to the Slaves like in the following picture

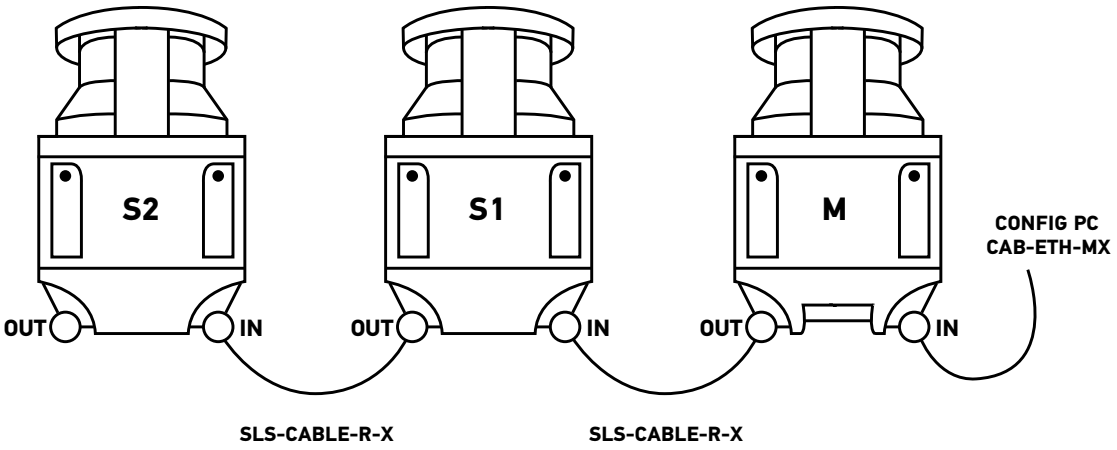

The colour graphical display of LASER SENTINEL shows if any person has been detected in the safety or warning areas, causing by consequnce the stopping of the machine or the warning signal to activate.
The presence of 11 angular sectors allow to show the direction in which the person has been detected, and its colour indicate if it has been inside the safety (red) or the warning zone (yellow).

DISPLAYED ICON	NAME	DESCRIPTION
GO	**ON state**	The device is correctly functioning (OSSDs GO Condition). No presence detected in the Safety and Warning Area. (Configuration accepted)
WARNING	**OFF State for intrusion in Safety Area**	The device is correctly functioning. The device has detected a presence in the Warning Area (Configuration accepted)
STOP	**Warning for intrusion in Warning Area**	The device is correctly functioning (OSSDs STOP Condition). The device has detected a presence in the Safety Zone. (Configuration accepted)
REFERENCE	**OFF State for Reference Points**	The device has detected that Reference Points have moved. The Display Sector in the direction of the moved reference point is lit in blue.

LED NUMBER	SYMBOL	DEFINITION	COLOR	MEANING	OUTPUT STATUS
1		Object Detection in Safety Zone 1 (OSSD 11/12).	GREEN	No object detected	OSSDs OFF
			RED	Object detected	OSSDs ON
2		Object Detection in Safety Zone 2 (OSSD 21/22).	GREEN	No object detected	OSSDs OFF
			RED	Object detected	OSSDs ON
3		Object Detection in Safety Zone 3 or Warning Zone 2	AMBER	Object detected	OSSDs OFF Warning 2 ON/OFF if set up
			OFF	No object detected	OSSDs ON Warning 2 output varies depending on warning function configuration
4		Object Detection in Warning Zone 1	AMBER	Object detected in Warning Zone 1	Warning 1 output varies depending on warning function configuration
			OFF	No object detected in Warning Zone 1	Warning 1 output varies depending on warning function configuration
5		Interlock	AMBER	No Object detected in Safety Zone Device waiting for Manual Restart (LED1 RED)	OSSDs OFF
			OFF	No Object detected in Safety Zone Device in ON Status (LED 1 GREEN)	OSSDs ON
				Object detected in Safety Zone Device in OFF Status (LED 1 RED)	OSSDs OFF

Rev. 07, 05/2020

DATALOGIC PRODUCT OFFERING

Sensors

Hand Held scanners

Mobile Computers

Laser Marking Systems

Vision Systems

Stationary Industrial Scanners

Safety Light Curtains

RFID Systems

The company endeavours to continuously improve and renew its products; for this reason the technical data and contents of this catalogue may undergo variations without prior notice. For correct installation and use, the company can guarantee only the data indicated in the instruction manual supplied with the products.