Jade™ X7

Portal Scanner

Quick Reference Guide

Datalogic USA, Inc.
959 Terry Street
Eugene, OR 97402
USA
Telephone: (541) 683-5700
Fax: (541) 345-7140

©2015-2017 Datalogic S.p.A. and/or its affiliates
An Unpublished Work - All rights reserved. No part of the contents of this documentation or the procedures described therein may be reproduced or transmitted in any form or by any means without prior written permission of Datalogic S.p.A. and/or its affiliates ("Datalogic" or "Datalogic USA, Inc."). Owners of Datalogic products are hereby granted a non-exclusive, revocable license to reproduce and transmit this documentation for the purchaser's own internal business purposes. Purchaser shall not remove or alter any proprietary notices, including copyright notices, contained in this documentation and shall ensure that all notices appear on any reproductions of the documentation.
Should future revisions of this manual be published, you can acquire printed versions by contacting your Datalogic representative. Electronic versions may either be downloadable from the Datalogic website (www.datalogic.com) or provided on appropriate media. If you visit our website and would like to make comments or suggestions about this or other Datalogic publications, please let us know via the "Contact Datalogic" page.

Disclaimer

Datalogic has taken reasonable measures to provide information in this manual that is complete and accurate, however, Datalogic reserves the right to change any specification at any time without prior notice.
Datalogic and the Datalogic logo are registered trademarks of Datalogic S.p.A. in many countries, including the U.S. and the E.U. All other brand and product names may be trademarks of their respective owners.
Jade is a trademark of Datalogic S.p.A. or of Datalogic Group companies, registered in many countries, including the U.S. and the E.U.

Patents

See www.patents.datalogic.com for patent list.

See the Regulatory Addendum included with your product for additional regulatory, safety and legal information.

Table of Contents

JADE™ X7 1

Introduction 1

Box Contents 1

Scanner Features 2

Operation 3

Power-on 3

Scanning 4

Control Panel 4

Maintenance 5

Cleaning 5

Spillage 6

Debris Tray/Window 6

LED and Audio Indicators 7

Arch Indicators 7

Audio Indicators 8

Datalogic USA, Inc. Limited Factory Warranty 9

NOTES

Jade™ X7

Introduction

This Quick Reference Manual explains the basic features and functions of the portal scanner.

NOTE

This manual covers more than one model of the Jade X7 product. Your model may differ slightly from the images shown. Alternate diagrams are shown when necessary to explain the differences between models.

Additionally, differences due to multiple checkstand types and options may be present.

Box Contents

When the pallet contents are opened, the three large boxes should contain one each of the major assemblies shown below and on the next page.

Figure 1 . Major Assemblies

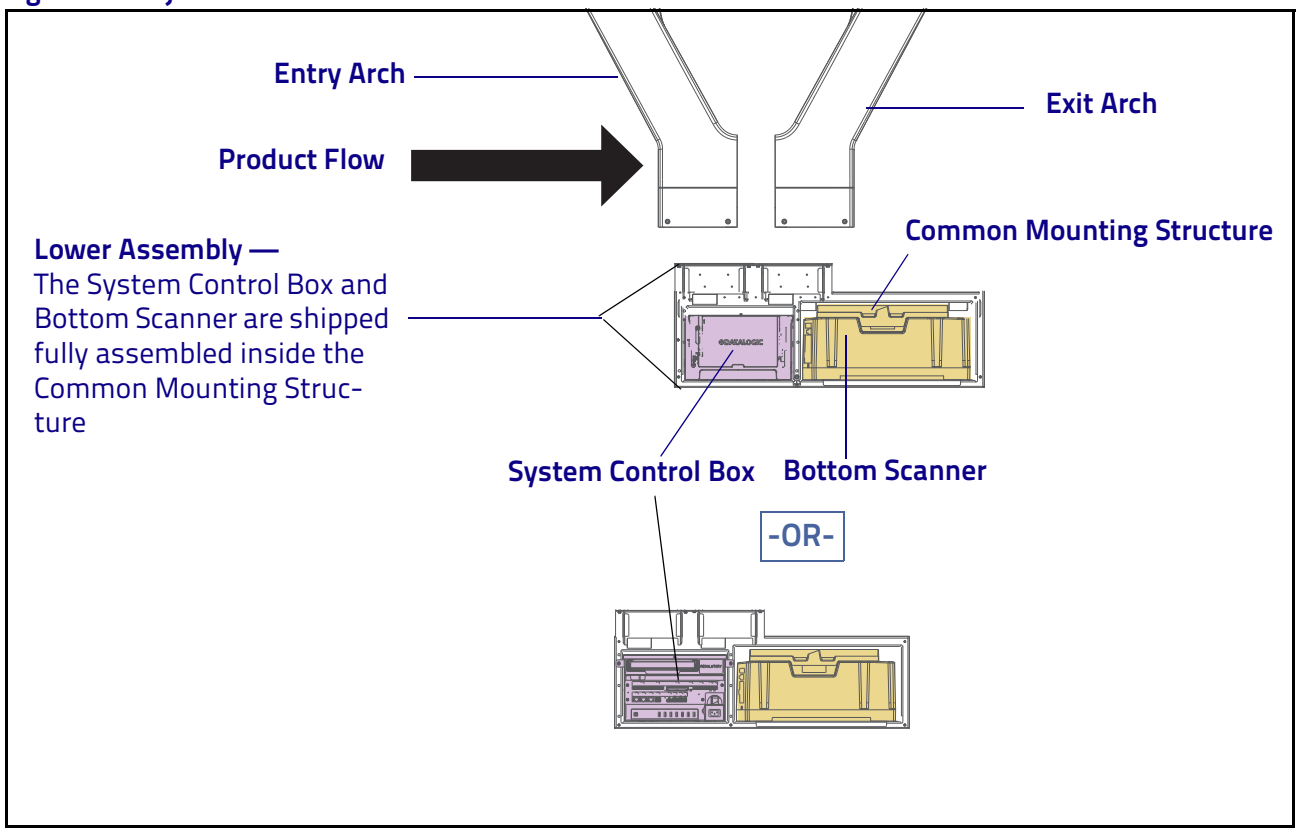

The installer will need to reference the Product Reference Guide (PRG, available for viewing & download at the Datalogic website) for information about site preparation, grounding, feature configuration, troubleshooting, calibration and all other topics involved in installing the scanning system.

Scanner Features

The major parts of the scanner are shown below. Access to the Lower Assembly is dependent upon how the system integrator or manufacturer has designed your checkstand. Ideally, entry panels have been built in that allow easy visibility and access to the necessary parts and features.

Figure 2. Scanner Features

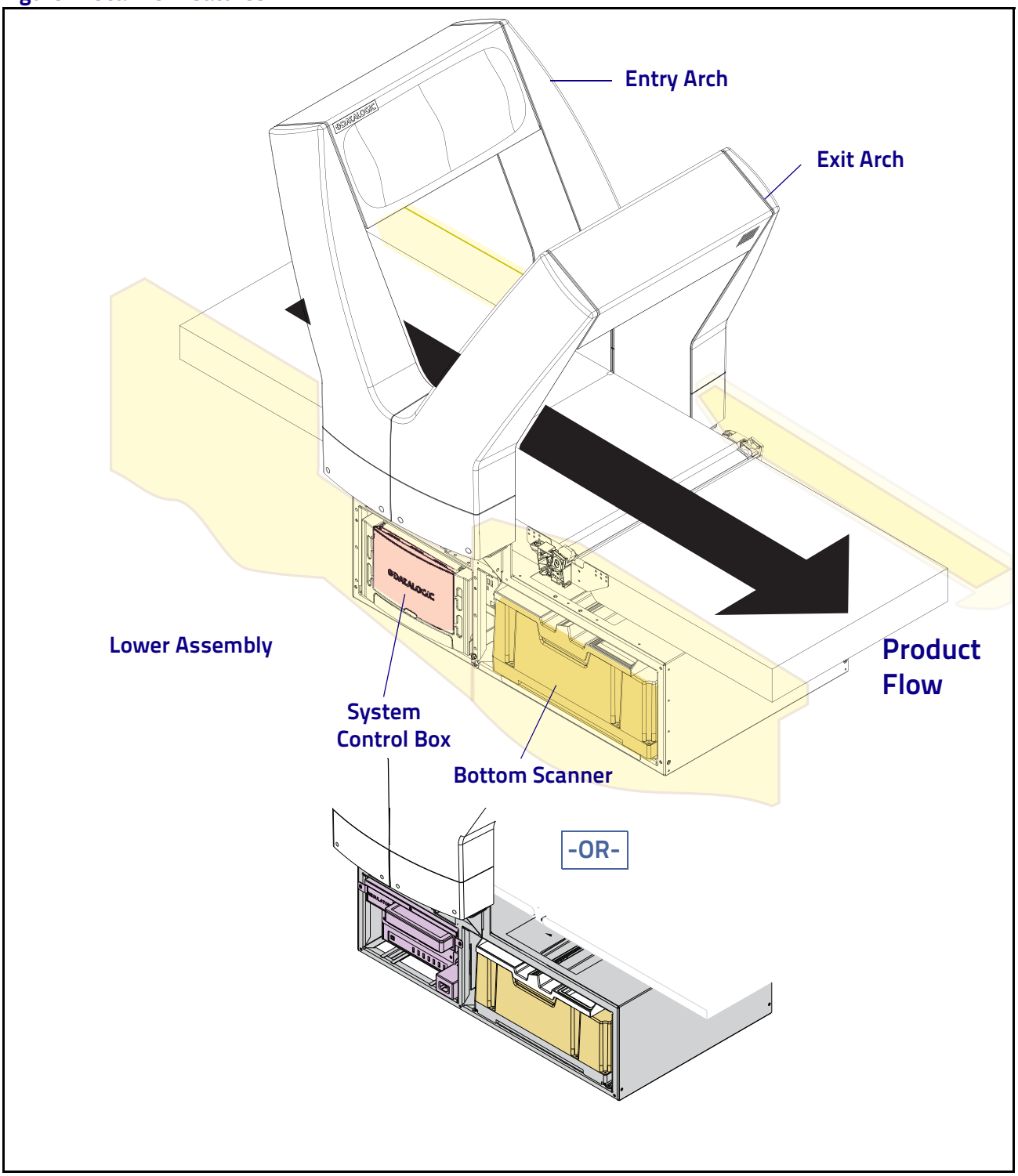

Operation

Prior to powering on the Jade unit, the installer should ensure that the Jade unit has been grounded to earth ground. Some models have a Grounding Screw (shown in Figure 3 **below). Reference the Jade X7 PRG for complete grounding and installation instructions.**

Power-on

If scanner power is not already on, press the power switch located on the System Control Box to the ON position. The illustration that follows show the ON/OFF Switch for both models. The scanner arch indicator lights will then show the Startup indication (indicated by arch indicator lights blinking red, green, blue as described on page 7). Scanner startup can take several minutes.

If the scanner is already powered on, but in Sleep Mode (indicated by arch indicator lights blinking blue), it can be returned to Normal Operation by a host command from the POS.

Figure 3. ON / OFF Switch and Grounding Screw Location

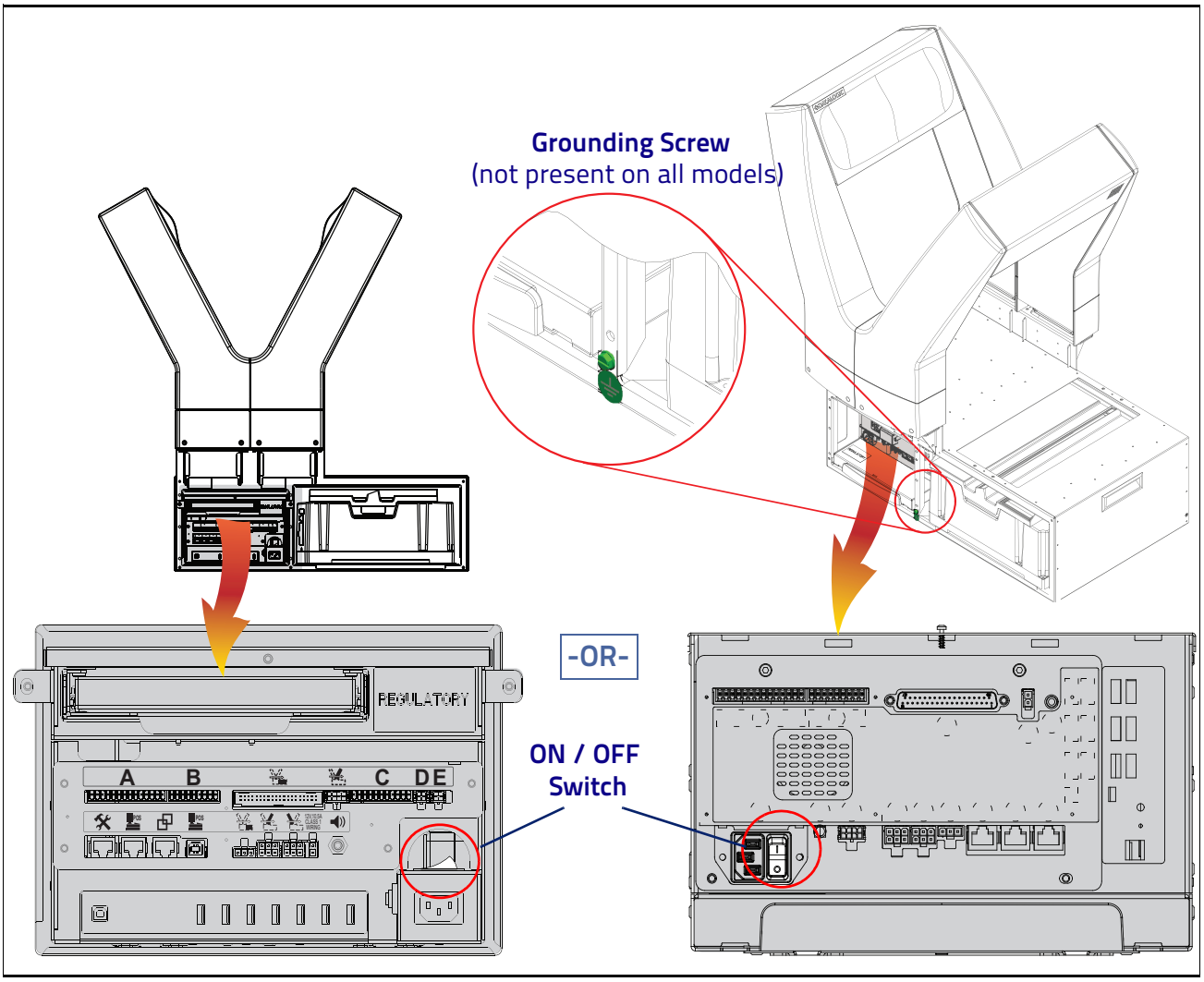

Scanning

The surface from the conveyor belt and beneath the arches up to, and including the transition plate constitutes the effective scanning area. Imager/cameras distributed throughout the arches 'curtain" the area within that zone for scanning items on five sides. The sixth side (bottom) of an item is scanned by the upward-facing optics (bottom scanner) beneath the transition plate.

Items for purchase are placed in the queuing zone of the conveyor belt, then swiftly carried by the conveyor through the scanning arches and over the transition plate. Once the item has passed through the scanner, it is ready to accept another item. Since this process takes only seconds, the queuing area is cleared and ready for another item almost immediately.

NOTE

Items are placed on the belt without regard to whether the bar code for the previously placed item was successfully read. The scanner will use ViPR object recognition technology in an attempt to recognize any unread items. If an item remains unidentified, image and object information are sent to the POS so that the item can be added to the transaction manually or by some other means.

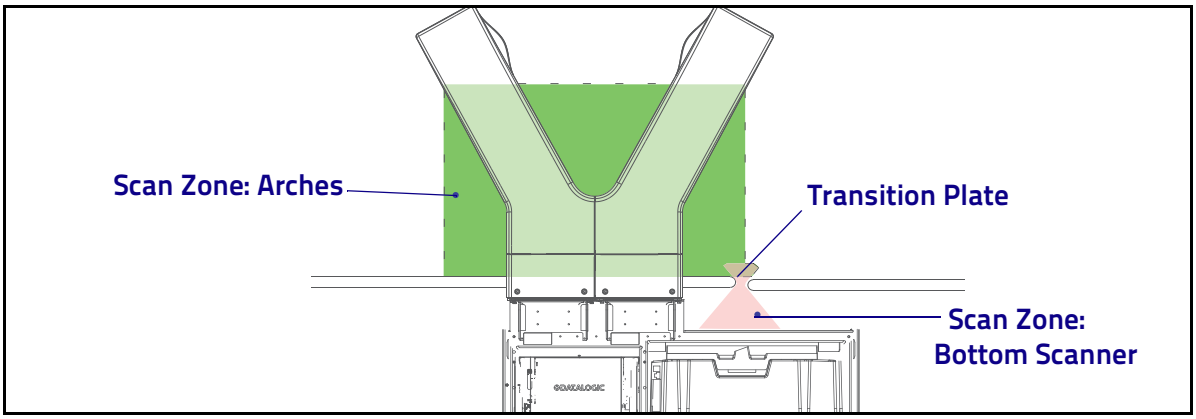

Control Panel

Depending on your model, the Control Panel is located either below or above the System Control Box. The Control Panel is part of the Lower Assembly and is accessed by sliding it out from the unit.

Control Panel Functions include but are not limited to visual display for the internal computer running the Scanner software.

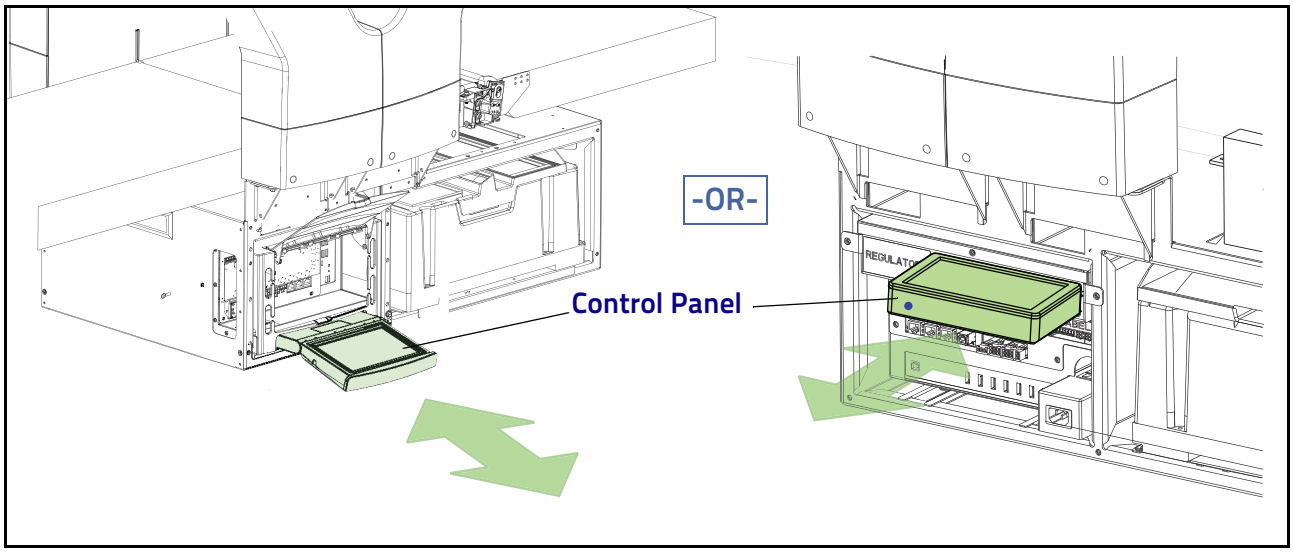

Maintenance

Cleaning

The scanner will provide dependable service for many years. The following maintenance procedures will keep your scanner operating at peak performance.

Whenever needed, gently clean the transparent surfaces of the arches, the bottom scanner debris tray and the transition plate glass using paper towels or lint-free cleaning tissues dampened with a non-abrasive, mild, water-based glass cleaner (as shown in the inset). The other surfaces can also be cleaned using the same cleaning agents. Do not allow fluids to flow into the internal parts of the scanner.

CAUTION

DO NOT use abrasive pads or cleaning agents.

DO NOT spray or pour liquids directly onto the scanner.

Figure 4. Cleaning the Scan Windows, Debris Tray and Transition Plate Glass

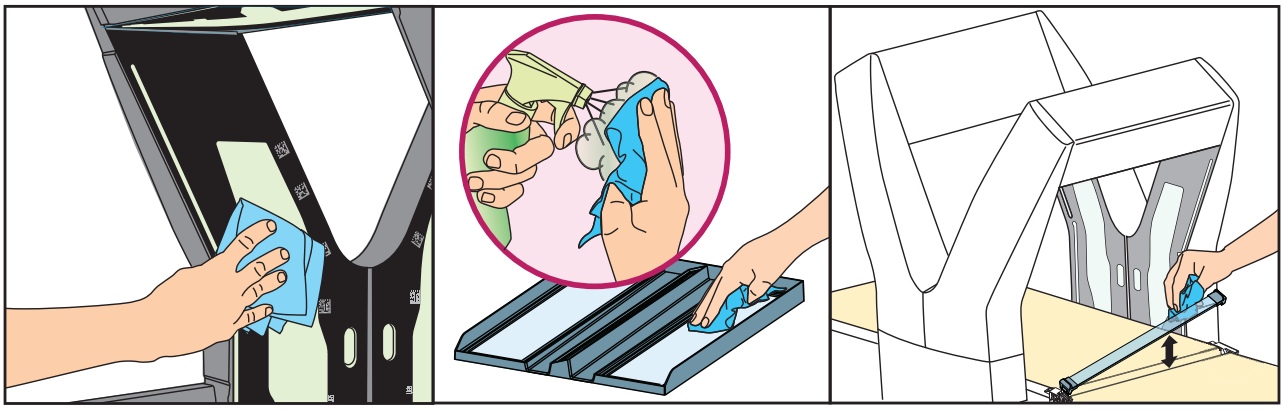

NOTE

The Portal Scanner will send an alert message when the bottom scanner debris tray and transition glass are in need of cleaning.

Spillage

Inevitably, packages placed on the conveyor belt will break open or bottles will leak. In anticipation of this problem, the scanner has been designed to channel the flow of spillage through less-vulnerable areas. Figure 5 shows how a leakage is routed by the Debris Tray/Window toward the outside of the unit, then through a drain hole into a container placed to collect it. This container, of course, must be periodically checked and emptied.

Figure 5. Provisions for Spillage

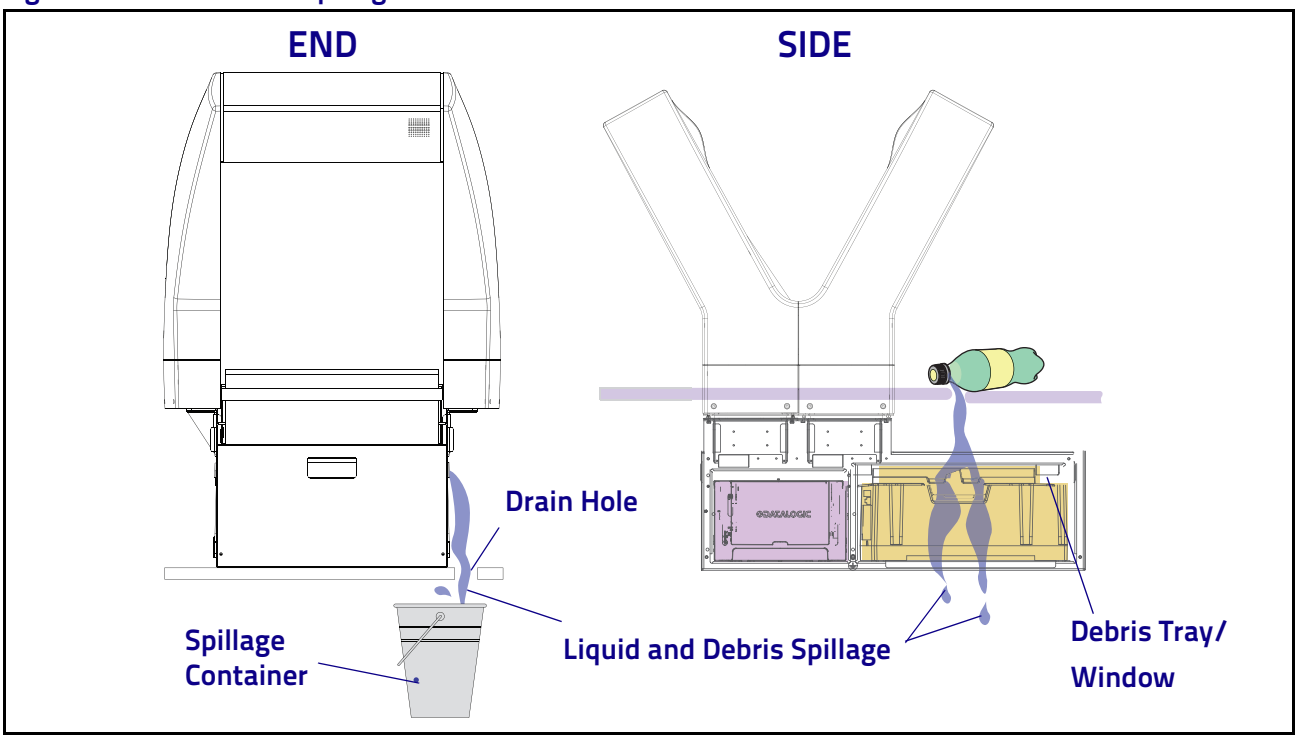

Debris Tray/Window

A Debris Tray/Window is located just beneath the transition plate. The tray acts to collect and route any spillage from the conveyor belt area and protect the bottom scanner from contamination. For best scan performance it is important to regularly check and clean the Debris Tray/Window to ensure the Bottom Scanner optics are never obscured.

Figure 6. Removing/Reinstalling the Debris Tray/Window

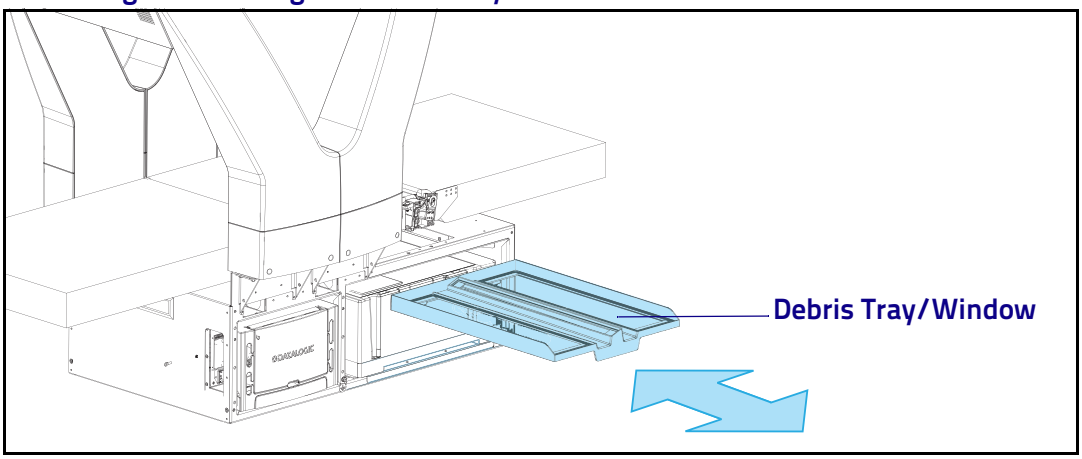

LED and Audio Indicators

The scanning system provides onboard LED indicators (one multi-color 'illuminating logo" per arch). The system may offer additional custom LEDs, audio sounds and other indicators which are unique to your installation. Be sure to check the documentation for the checkstand and other equipment for further information.

Arch Indicators

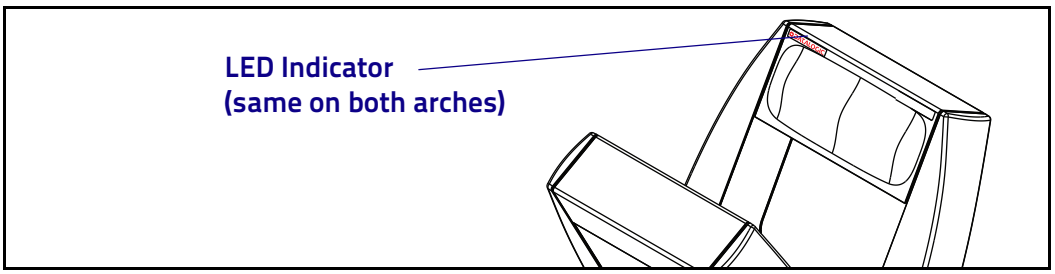

One LED indicator is located on each arch (Entry and Exit) in the same position on each arch as shown. See the Table below for a listing of standard factory arch LED indications. The indications are not configurable.

Table 1. Arch LED Status Indicators

DESCRIPTION	COLOR PATTERN	
Arch Initial Program Load Event	*Momentary* Green (5s) – Off (30s)	
Startup	*Cycle* Red (.5s) – Green (.5s) – Blue (.5s)	
Arch Completed Selftest Event	*Momentary* Green (1s) – Off (.5s)	
Ready – POS not Connected	*Cycle* Black (.25s) – Blue (.25s) – Black (.25s) – Blue (2.25s)	
Ready – Reading not Enabled	*Steady* Blue	
Ready – Reading Enabled	*Steady* Green	
Sleep	*Cycle* Blue (1s) – Off (1s)	
Fault	*Cycle* Red (2s) – Off (2s)	
Calibration	*Cycle* Green (2s) – Off (2s)	
Service	*Cycle* Blue (2s) – Green (2s)	

Audio Indicators

Audio indications are WAV files stored in the system that are played by the scanner. The table below shows factory default settings.

NOTE

If your system is programmed to sound audio indications, but no indications can be heard when expected, installation of external speakers might be required. Connect the external powered speaker(s) at the 3.5mm line out speaker connector (audio jack) at the front of the system control box.

Table 2. Audio Indications

EVENT	AUDIO INDICATION	COMMENT
Start-up	factory/startup.wav	The system is starting up.
Item Unmatched	factory/error_beep.wav	Scanned label data was not matched with an object in the scan volume.
Item With No Label Data	factory/ 300Hz_600_10_400.wav	There is no label data for an item which passed through the scan zone.
Item With One Label	factory/1kHz_400_10_300.wav	An item was successfully scanned, returning data from one label.
Item With More Than One Label	factory/1kHz_400_10_300.wav	Data from two or more labels was scanned for one item.
Sound PC Volume	100 (factory default)	The volume is selectable from a numeric range of 0 to 100.

Your system may have been modified with custom sound files that are unique to your installation. See the Product Reference Guide (PRG) for more information about this configurable feature.

Datalogic USA, Inc. Limited Factory Warranty

Warranty Coverage

Datalogic warrants to Customer that this product will be free from defects in materials and workmanship for a period of 90 days from product shipment.

Datalogic USA ('Datalogic") hardware products are warranted against defects in material and workmanship under normal and proper use. The liability of Datalogic under this warranty is limited to furnishing the labor and parts necessary to remedy any defect covered by this warranty and restore the product to its normal operating condition. Repair or replacement of product during the warranty does not extend the original warranty term. Products are sold on the basis of specifications applicable at the time of manufacture and Datalogic has no obligation to modify or update products once sold.

If Datalogic determines that a product has defects in material or workmanship, Datalogic shall, at its sole option repair or replace the product without additional charge for parts and labor, or credit or refund the defective products duly returned to Datalogic. To perform repairs, Datalogic may use new or reconditioned parts, components, subassemblies or products that have been tested as meeting applicable specifications for equivalent new material and products. Customer will allow Datalogic to scrap all parts removed from the repaired product. The warranty period shall extend from the date of shipment from Datalogic for the duration published by Datalogic for the product at the time of purchase (Warranty period). Datalogic warrants repaired hardware devices against defects in workmanship and materials on the repaired assembly for a 90 day period starting from the date of shipment of the repaired product from Datalogic or until the expiration of the original warranty period, whichever is longer. Datalogic does not guarantee, and it is not responsible for, the maintenance of, damage to, or loss of configurations, data, and applications on the repaired units and at its sole discretion can return the units in the 'factory default" configuration or with any software or firmware update available at the time of the repair (other than the firmware or software installed during the manufacture of the product). Customer accepts responsibility to maintain a back up copy of its software and data.

Warranty Claims Process

In order to obtain service under the Factory Warranty, Customer must notify Datalogic of the claimed defect before the expiration of the applicable Warranty period and obtain from Datalogic a return authorization number (RMA) for return of the product to a designated Datalogic service center. If Datalogic determines Customer's claim is valid, Datalogic will repair or replace product without additional charge for parts and labor. Customer shall be responsible for packaging and shipping the product to the designated Datalogic service center, with shipping charges prepaid. Datalogic shall pay for the return of the product to Customer if the shipment is to a location within the country in which the Datalogic service center is located. Customer shall be responsible for paying all shipping charges, duties, taxes, and any other charges for products returned to any other locations. Failure to follow the applicable RMA policy, may result in a processing fee. Customer shall be responsible for return shipment expenses for products which Datalogic, at its sole discretion, determines are not defective or eligible for warranty repair.

Warranty Exclusions

The Datalogic Factory Warranty shall not apply to:

(i) any product which has been damaged, modified, altered, repaired or upgraded by other than Datalogic service personnel or its authorized representatives;

(ii) any claimed defect, failure or damage which Datalogic determines was caused by faulty operations, improper use, abuse, misuse, wear and tear, negligence, improper storage or use of parts or accessories not approved or supplied by Datalogic;

(iii) any claimed defect or damage caused by the use of product with any other instrument, equipment or apparatus;

(iv) any claimed defect or damage caused by the failure to provide proper maintenance, including but not limited to cleaning the upper window in accordance with product manual;

(v) any defect or damage caused by natural or man-made disaster such as but not limited to fire, water damage, floods, other natural disasters, vandalism or abusive events that would cause internal and external component damage or destruction of the whole unit, consumable items;

(vi) any damage or malfunctioning caused by non-restoring action as for example firmware or software upgrades, software or hardware reconfigurations etc.;

(vii) the replacement of upper window/cartridge due to scratching, stains or other degradation and/or

(viii) any consumable or equivalent (e.g., cables, power supply, batteries, keypads, touch screen, triggers etc.).

No Assignment

Customer may not assign or otherwise transfer its rights or obligations under this warranty except to a purchaser or transferee of product. No attempted assignment or transfer in violation of this provision shall be valid or binding upon Datalogic.

DATALOGIC'S LIMITED WARRANTY IS IN LIEU OF ALL OTHER WARRANTIES, EXPRESS OR IMPLIED, ORAL OR WRITTEN, STATUTORY OR OTHERWISE, INCLUDING, WITHOUT LIMITATION, ANY IMPLIED WARRANTIES OF MERCHANTABILITY, FITNESS FOR A PARTICULAR PURPOSE, OR NONINFRINGEMENT. DATALOGIC SHALL NOT BE LIABLE FOR ANY DAMAGES SUSTAINED BY CUSTOMER ARISING FROM DELAYS IN THE REPLACEMENT OR REPAIR OF PRODUCTS UNDER THE ABOVE. THE REMEDY SET FORTH IN THIS WARRANTY STATEMENT IS THE CUSTOMER'S SOLE AND EXCLUSIVE REMEDY FOR WARRANTY CLAIMS. UNDER NO CIRCUMSTANCES WILL DATALOGIC BE LIABLE TO CUSTOMER OR ANY THIRD PARTY FOR ANY LOST PROFITS, OR ANY INCIDENTAL, CONSEQUENTIAL IN-DIRECT, SPECIAL OR CONTINGENT DAMAGES REGARDLESS OF WHETHER DATALOGIC HAD ADVANCE NOTICE OF THE POSSIBILITY OF SUCH DAMAGES.

Risk of Loss

Customer shall bear risk of loss or damage for product in transit to Datalogic. Datalogic shall assume risk of loss or damage for product in Datalogic's possession. In the absence of specific written instructions for the return of product to Customer, Datalogic will select the carrier, but Datalogic shall not thereby assume any liability in connection with the return shipment.

©2015-2017 Datalogic S.p.A. and its Group companies ▪ All rights reserved. ▪ Without limiting the rights under copyright, no part of this documentation may be reproduced, stored in or introduced into a retrieval system, or transmitted in any form or by any means, or for any purpose, without the express written permission of Datalogic S.p.A. and/or its affiliates. ▪ Datalogic and the Datalogic logo are registered trademarks of Datalogic S.p.A. in many countries, including the U.S. and the E.U.

www.datalogic.com

Datalogic USA, Inc.
959 Terry Street | Eugene | OR 97402 | USA
Telephone: (1) 541-683-5700 | Fax: (1) 541-345-7140

820098714 (Rev. C) Sept 2017