DS4800

Industrial Bar Code Scanners

Enhanced Connectivity

Ease of use

Configuration SW Tool

ACR4™ technology

Smart focus adjustment

APPLICATIONS

- Automated warehousing
- Reading on pallets
- Picking systems
- Automated shop floor
- Items and parts tracking
- Process control systems
- Outdoor application (Subzero models)
- Frozen industry (Subzero models)

ADVANTAGES

- Performance optimization and extended reading area through smart focus adjustment
- DIGITECH™ technology permits full software control over signal processing parameters. Scanner setup can therefore be optimized simply loading optimized software recipes, thus enabling excellent performance in all reading conditions
- Improved reading rate on low contrast barcodes and excellent performance at high skew angles
- ACR4™ reconstruction technology increases the maximum tilt angle and overall read rate on damaged barcodes
- Overall cost reduction and simple network wiring thanks to ID-NET™ high-speed connectivity
- Extended Fieldbus and Ethernet connectivity through a complete range of modular connection boxes and accessories
- Subzero versions extended operating temperature range -35 +50 °C

HIGHLIGHTS

- Smart Focus adjustment for flexible reading area selection
- DIGITECH™ technology enables excellent reading performance
- ACR4™ reconstruction technology improves reading of damaged barcodes
- Linear and integrated Oscillating Mirror versions
- Intuitive X-PRESS™ interface for quick scanner installation and troubleshooting
- Easy setup through multilanguage Genius™ software tool
- ID-NET™ embedded interface for high-speed communication networks
- Multilanguage display improves scanner monitoring and diagnostics
- Total ambient light immunity thanks to high frequency laser modulation
- IP65 rugged industrial housing
- Subzero versions available

GENERAL DESCRIPTION

DS4800 features excellent reading performance satisfying all main identification needs of manufacturing plants, especially in automated shop floor and automated warehousing applications.
Through smart focus adjustment, DS4800 allows to optimize the reading performance based on reading distance. Thanks to DIGITECH™ technology and optimized reading recipes, DS4800 provides excellent reading performance on low quality and low contrast barcodes as well as at high skew angles.
DS4800 is equipped with the innovative X-PRESS™ Human Machine Interface, granting easy scanner installation and maintenance. This interface clearly presents status and diagnostic information by means of a five LED bar graph, while the single multi-function key gives immediate access to relevant functions such as Test Mode, Auto Setup, Auto Learn and Focus Adjustment.
Thanks to subzero models, DS4800 can operate smoothly down to -35°C. Internal heater and de-frost window heater assures correct operation anywher in the allowed -35 + 50 °C range.
With its rugged construction, IP65 protection class, 0 to 50°C operating temperature range temperature and total ambient light immunity, DS4800 is the ideal product for industrial applications.

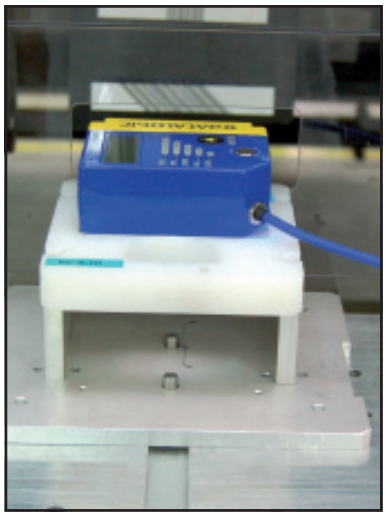

READING DIAGRAMS

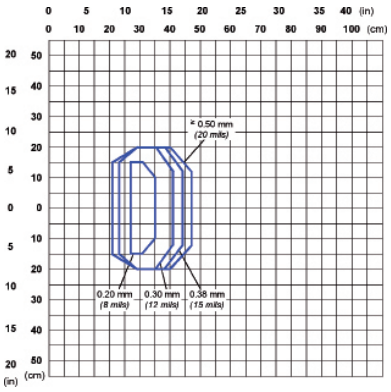

DS4800-1000
Focus Distance 30 cm / 11.81 in (Near)

CONDITIONS		
Code	=	Code 128
PCS	=	0.90
Pitch angle	=	0°
Skew angle	=	15°
Tilt angle	=	0° to 30°
* Scan Speed	=	800 scans/sec.
* Reading Condition	=	Standard
* Reading Mode	=	Linear

* Parameter selectable in Genius™

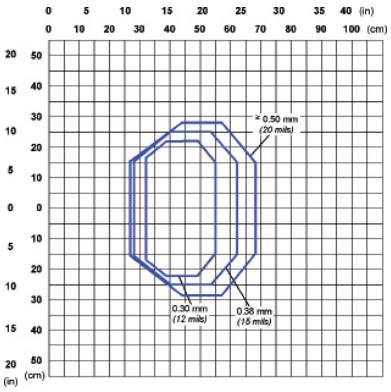

DS4800-1000
Focus Distance 40 cm / 15.75 in (Medium)

CONDITIONS		
Code	=	Code 128
PCS	=	0.90
Pitch angle	=	0°
Skew angle	=	15°
Tilt angle	=	0° to 30°
* Scan Speed	=	800 scans/sec.
* Reading Condition	=	Standard
* Reading Mode	=	Linear

* Parameter selectable in Genius™

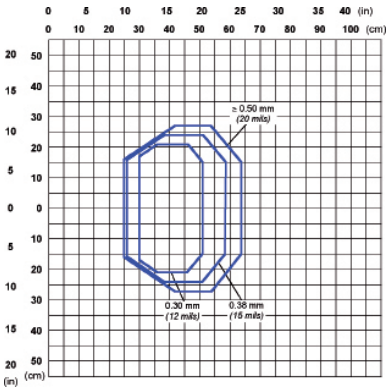

DS4800-1100
Focus Distance 40 cm / 15.75 in (Medium)

CONDITIONS		
Code	=	Code 128
PCS	=	0.90
Pitch angle	=	0°
Skew angle	=	15°
Tilt angle	=	0° to 30°
* Scan Speed	=	800 scans/sec.
* Reading Condition	=	Standard
* Reading Mode	=	Linear

* Parameter selectable in Genius™

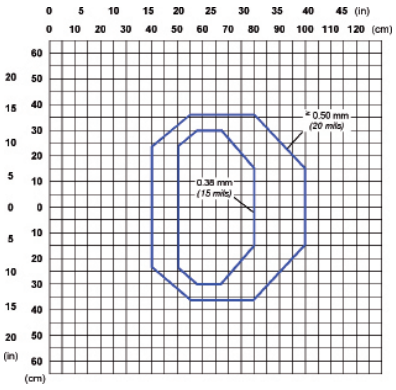

DS4800-1000
Focus Distance 60 cm / 23.62 in (Far)

CONDITIONS		
Code	=	Code 128
PCS	=	0.90
Pitch angle	=	0°
Skew angle	=	15°
Tilt angle	=	0° to 30°
* Scan Speed	=	800 scans/sec.
* Reading Condition	=	Standard
* Reading Mode	=	Linear

* Parameter selectable in Genius™

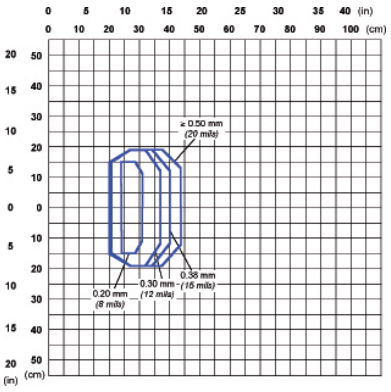

DS4800-1100
Focus Distance 30 cm / 11.81 in (Near)

CONDITIONS		
Code	=	Code 128
PCS	=	0.90
Pitch angle	=	0°
Skew angle	=	15°
Tilt angle	=	0° to 30°
* Scan Speed	=	800 scans/sec.
* Reading Condition	=	Standard
* Reading Mode	=	Linear

* Parameter selectable in Genius™

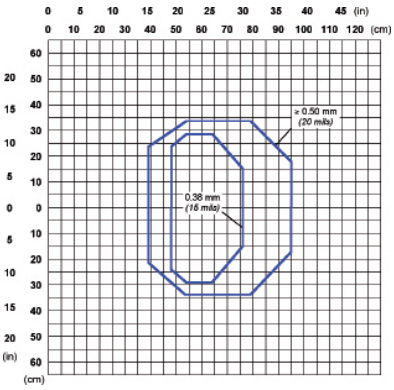

DS4800-1100
Focus Distance 60 cm / 23.62 in (Far)

CONDITIONS		
Code	=	Code 128
PCS	=	0.90
Pitch angle	=	0°
Skew angle	=	15°
Tilt angle	=	0° to 30°
* Scan Speed	=	800 scans/sec.
* Reading Condition	=	Standard
* Reading Mode	=	Linear

* Parameter selectable in Genius™

DIMENSIONS

LINEAR MODELS

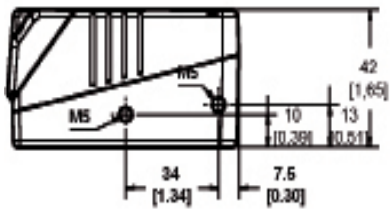

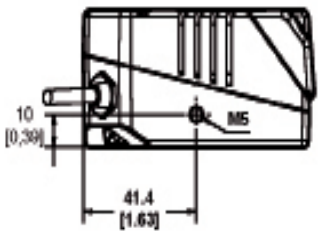

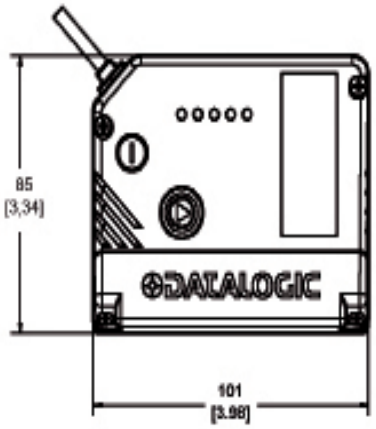

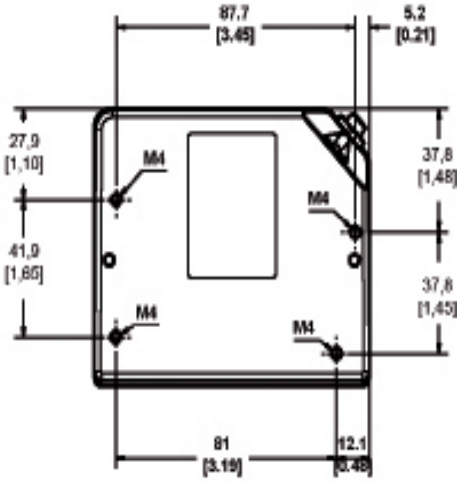

OSCILLATING MIRROR MODELS

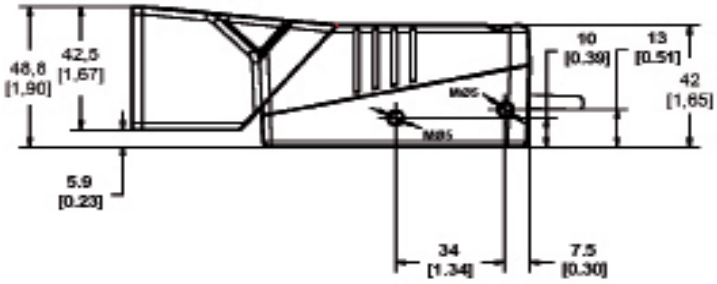

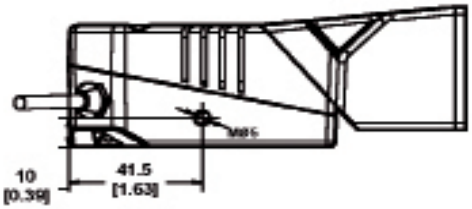

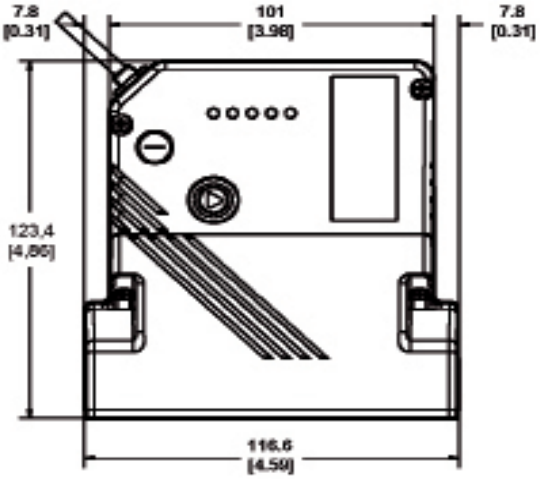

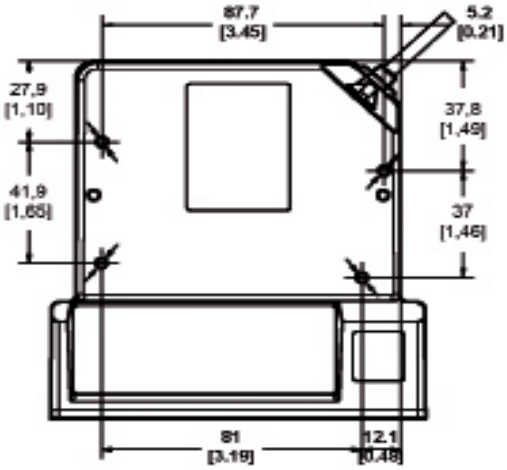

mm / inch

ELECTRICAL CONNECTIONS

All DS4800 models are equipped with a cable terminated by a 25-pin male D-sub connector for connection to the power supply and input/output signals.

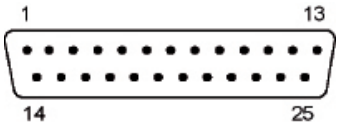

25-pin Female D-sub Connector

25-PIN D-SUB MALE CONNECTOR PINOUT				
Pin	**Name**		**Function**	
13,9	VDC		Power supply input voltage +	
25,7	GND		Power supply input voltage -	
1	CHASSIS		Cable shield connected to chassis	
18	I1A		External Trigger A (polarity insensitive)	
19	I1B		External Trigger B (polarity insensitive)	
6	I2A		Input 2 A (polarity insensitive)	
10	I2B		Input 2 B (polarity insensitive)	
8	O1+		Output 1 +	
22	O1-		Output 1 -	
11	O2+		Output 2 +	
12	O2-		Output 2 -	
20	RX		Auxiliary Interface RX	
21	TX		Auxiliary Interface TX	
23	ID+		ID-NET™ network +	
24	ID-		ID-NET™ network -	
14,15,16,17	NC		Not Connected	
Pin	**RS232**	**RS232**	**RS485 Full-Duplex**	**RS485 Half-Duplex**
2	Main Interface Signals (SW selectable)	TX	TX+	RTX+
3		RX	* RX+	
4		RTS	TX-	RTX-
5		CTS	* RX-	

* Do not leave floating, see DS4800 Reference Manual for connection details.

MODELS AND ACCESSORIES

MODELS	
Order No.	**Description**
931061318	DS4800-1000 ADJ FOCUS, LINEAR
931061321	DS4800-1100 ADJ FOCUS, OSCILLATING MIRROR
931061322	DS4800-1005 ADJ FOCUS, LINEAR, SUBZERO
931061325	DS4800-1105 ADJ FOCUS, OSC. MIRROR, SUBZERO

ACCESSORIES	
Order No.	**Description**
3ACC1837	BK-4000 L-SHAPE BRACKET (5 PCS)
3ACC1838	BK-4001 U-SHAPE BRACKET (5 PCS)

TECHNICAL DATA

MODELS	DS4800-100X		DS4800-110X	
DIMENSIONS	101 x 85 x 42 mm (3.97 x 3.33 x 1.65 in)		117 x 123 x 48 mm (4.60 x 4.84 x 1.89 in)	
WEIGHT	570 gr. (20.11 oz.)		780 gr. (27.9 oz.)	
CASE MATERIAL	Aluminum			
OPERATING TEMPERATURE	0 to 50 °C (32 to 122 °F)			
STORAGE TEMPERATURE	-35 to 50 °C (-31 to 122 °F) for subzero models			
HUMIDITY	90% non condensing			
VIBRATION RESISTANCE	IEC 68-2-6 test FC 1.5mm; 10 to 55 Hz; 2 hours on each axis			
SHOCK RESISTANCE	IEC 68-2-27 test EA 30 G; 11 ms; 3 shocks on each axis			
PROTECTION CLASS	IP65			
LIGHT SOURCE	Visible laser diode (630 to 680 nm)			
AMBIENT LIGHT REJECTION	30000 LUX			
SCANNING SPEED	600 to 1000 scan/s			
RESOLUTION	Up to 0.20 mm (8 mils)			
READING DISTANCE	Up to 1000 mm on 0.50 mm (20 mils) barcodes			
DEPTH OF FIELD	Up to 600 mm on 0.50 mm (20 mils) barcodes			
APERTURE ANGLE	50 degrees			
READABLE CODES	Code 2/5, Code39, Code93, Code128, EAN/UPC, EAN128, Codabar, Pharmacode, Plessey, ISBT128			
MULTILABEL READING	Up to 10 different symbologies during the same reading phase			
COMMUNICATION INTERFACES	Main port RS232/RS422/RS485 up to 115.2 Kbit/s			
	Auxiliary port RS232 up to 115.2 kbps			
	ID-NET™ port up to 1 Mbps			
CONNECTIVITY MODES	Pass Through, Master/Slave, Multiplexer			
DIGITAL INPUTS	Two SW programmable, optocoupled, NPN/PNP			
DIGITAL OUTPUTS	Two SW programmable, event driven, optocoupled			
DEVICE PROGRAMMING	X-PRESS™ Human Machine Interface			
	Windows™ based SW (Genius™) via serial link			
	Serial Host Mode Programming sequences			
OPERATING MODES	'On-line', 'Serial On-line', 'Automatic', 'Continuous', 'Test', 'Verifier'			
USER INTERFACE	X-PRESS™ Human Machine Interface			
	Programmable Push Button, LEDs (Status, Com, Trigger, Good, Ready, Power On)			
DISPLAY	16 x 2 characters			
LASER CLASSIFICATION	IEC 825-1 Class2; CDRH Class II			
LASER CONTROL	Safety system to turn laser off in cases of motor slowdown or failure			
MOTOR CONTROL	Motor On/Off command string and Motor Speed SW programmable			
	DS4800-1000	DS4800-1005	DS4800-1100	DS4800-1105
POWER SUPPLY	10 to 30 VDC	24 Vdc ± 10%	10 to 30 VDC	24 Vdc ± 10%
POWER CONSUMPTION	6 W	28.8 W	7.5 W	32 W