DS5100™

DATALOGIC

IDENTIFICATION

Datalogic announces the availability of the DS5100, the new flexible, powerful and compact laser scanner. The DS5100 is a cost effective solution satisfying the main identification needs of Automotive, Food & Beverage, Pharmaceutical and other manufacturing plants.

The DS5100 offers a complete and flexible portfolio including Medium and Long Range models, Linear and Oscillating Mirror models. The unit boasts the DST™ (Digital Signal Technology) for stable and constant performance at any operative condition, a best in class ACR™ 4 reconstruction algorithm, and optimized reading recipes for flexible and outstanding reading performance on low quality and low contrast bar codes, damaged labels as well as at high skew angles. Superior reading performance together with a user selectable focus make the DS5100 the ideal solution to cover different applications along the manufacturing chain: Shop Floor, End of Line, Automated Warehouse, Intralogistics, Pallet Reading and more.

Top Industrial grade IP65 protection class, subzero™ models down to -35°C and total ambient light immunity make the DS5100 ideal for harsh industrial environments, outdoor and frozen production facilities. For easy installation and flexible form factor the DS5100 is equipped with rotating connector block. For easy setup and maintenance the DS5100 has the intuitive X-PRESS™ interface and the Multilanguage Genius™ software tool. The embedded Multilanguage display improves scanner monitoring and diagnostics.

The DS5100 offers complete connectivity and networking capabilities. On-board Ethernet ports (one and two ports models) and switch provide embedded interface to main Fieldbus EtherNet/IP and PROFINET-IO without the need of external devices for a cost effective solution and short installation time. The ID-NET™ interface is ideal for high speed networks and multi side reading. Ethernet Bus Connection EBC™ interface delivers real time multi-head synchronization and events via bus for short and easy installation (no signal cables), PACKTRACK™ tracking technology mode for increased reading throughput and accuracy.
Extended interoperability with Datalogic mid-range (DS2100N/DS2400N through ID-NET interface) and long range (DS8110/DX8210 through EBC) laser scanner families allows the DS5100 to be the perfect solution for integrated systems.

With its outstanding performances, the DS5100 delivers a smart, flexible and high performance/price ratio offer in the Datalogic scanner portfolio.

HIGHLIGHTS

- Medium, Long Range, Linear and Oscillating Mirror models, user selectable focus for high application flexibility
- ID-NET interface and Ethernet Bus Connections (EBC)
- Embedded PROFINET-IO and EtherNet/IP for connectivity to main industrial Fieldbus
- X-PRESS interface, Genius software tool, embedded multi-language display for easy scanner setup and maintenance
- Rotating connector block for flexible form factor and easy installation
- DST (Digital Signal Technology), ACR4 reconstruction technology and PACKTRACK tracking technology on Long Range
- Superior ambient light immunity from high frequency laser modulation
- Top industrial grade, IP65 and subzero version for low temperature environments

APPLICATIONS

MANUFACTURING APPLICATIONS

- **Automotive:** Shop Floor, Work In Progress Control, Parts Traceability
- **Food & Beverage, Pharmaceutical:** Secondary Package Control, End of Line, Palletizing, Automated Warehouse, Tote Tray Identification, Automatic Picking Process Control, Intralogistics, Entry level Sorting and Shipping Process, Pallet Reading, Cold Storage and Outdoor applications (subzero models)
- **General Manufacturing:** Shop Floor, Work In Progress Control, Parts Traceability, Secondary Package Control, End of Line, Palletizing, Shipping process, Automated Warehouse, Intralogistics

DS5100™

DATALOGIC

TECHNICAL DATA

INDUSTRIAL LASER BAR CODE SCANNERS	DS5100-X2XX	DS5100-X3XX	DS5100-X4XX
Reading distance (min/max)	Medium range: 200 - 1000 mm Long Range: 300 - 1400 mm		
Max resolution	up to 0.2 mm (8mils)		
Scan rate	800 scan/s		
Focus adjustment	Mechanically adjustable focus with locking		
Scan pattern type	Linear / Oscillating Mirror / Deflection Mirror		
Aperture angle	65 degrees		
Multilabel reading	Up to 10 Codes in the same reading phase		
Bar code assignment technology	Packtrack tracking technology on Long Range models DS5100-24xx only when configured in an EBC network (not available on Medium Range models)		
Reconstruction code technology	ACR4		
Readable codes	Code 2/5, Code39, Code93, Code128, EAN/UPC, EAN128, Codabar, Pharmacode, Plessey, ISBT128		
Case material	Aluminum		
Dimensions (typical value)	LIN: 101 x 85 x 42 mm (3.98 x 3.35 x 1.65 in) OM: 116.7 x 123.6 x 48.4 mm (4.60 x 4.86 x 1.90 in)	LIN: 101 x 104.2 x 42 mm (3.98 x 4.1 x 1.65 in) OM: 116.7 x 142.9 x 48.4 mm (4.60 x 56.26 x 1.90 in)	LIN: 117.75 x 104.6 x 42 mm (3.98 x 4.12 x 1.65 in) OM: 125.8 x 143.3 x 48.4 mm (4.95 x 5,64 x 1.90 in)
Weight	LIN: 580 g OM: 775 g	LIN: 520 g OM: 715 g	LIN: 550 g OM: 745 g
Operating temperature	0° to +50 °C (+32°F to +122 °F) Subzero version -35°C to +50°C (-31°F to +122 °F)		
Storage temperature	-20° to +70° C (-4°F to +158 °F) Subzero version -35° to +70° C (-31°F to +158 °F)		
Ip rating	IP65		
Embedded communication interfaces	Main port RS232/RS485-FD up to 115.2 Kbit/s Auxiliary port RS232 up to 115.2 kbps ID-NET™ RS485 multidrop port up to 1 Mbps	Main port RS232/RS485-FD up to 115.2 Kbit/s Auxiliary port RS232 up to 115.2 kbps ID-NET RS485 multidrop up to 1 Mbps EtherNet/IP, Modbus TCP, Ethernet TCP/IP, PROFINET-IO Class A	PROFINET-IO Class B EBC Technology (only as slave of SC5000)
Fieldbus/ethernet	Fieldbus supported through CBX or QLM external device	Embedded EtherNet/IP, PROFINET-IO, Modbus TCP Other fieldbus supported through CBX or QLM external device	Embedded PROFINET-IO
Digital inputs	2 Input (optocoupled, NPN/PNP)	2 Input (optocoupled, NPN/PNP)	1 Input (optocoupled, NPN/PNP)
Digital outputs	2 Outputs (optocoupled)	2 Outputs (non-optocoupled)	/
Operating modes	On-line, Serial On-line, Automatic, Continuous, Test, Verifier, Packtrack tracking technology on Long Range when configured in an EBC network		
Display	16 x 2 characters		
Device programming	Genius (Windows™ based) software tool Serial Host Mode Programming sequences XPRESS interface		
Voltage supply/power consumption	DS5100 XX00	DS5100 XX20	
	10-30V; 6W	10-30V; 7,5W	
	DS5100 XX05	DS5100 XX25	
	24V; 28,8W	24V; 31,2W	

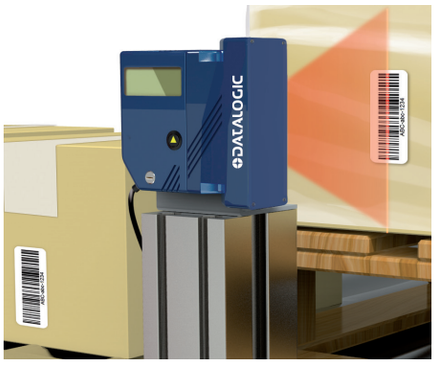

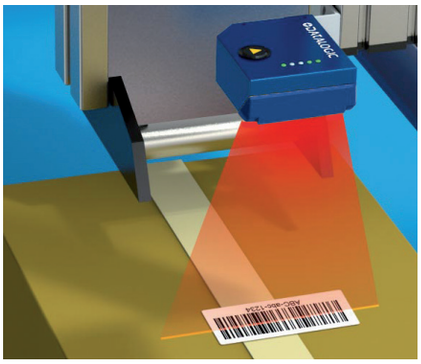

READING DIAGRAMS

MEDIUM RANGE MODEL

DS5100-1x00

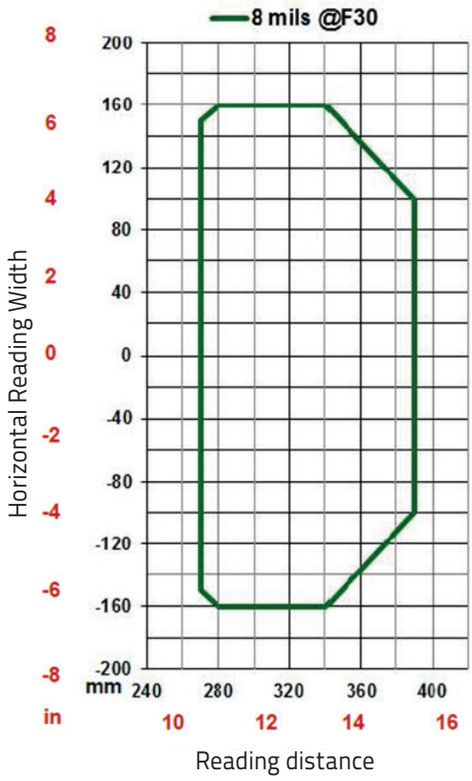

DS5100-1x00

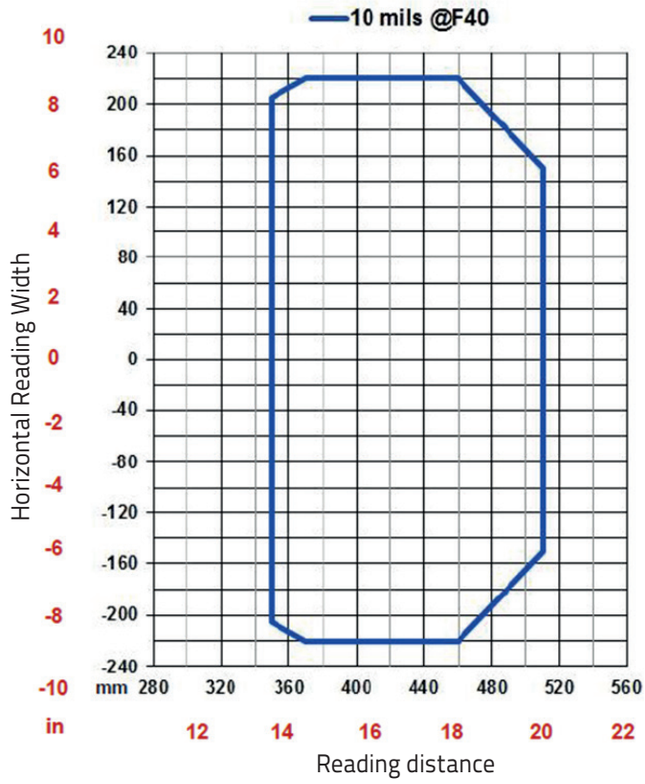

DS5100-1x00

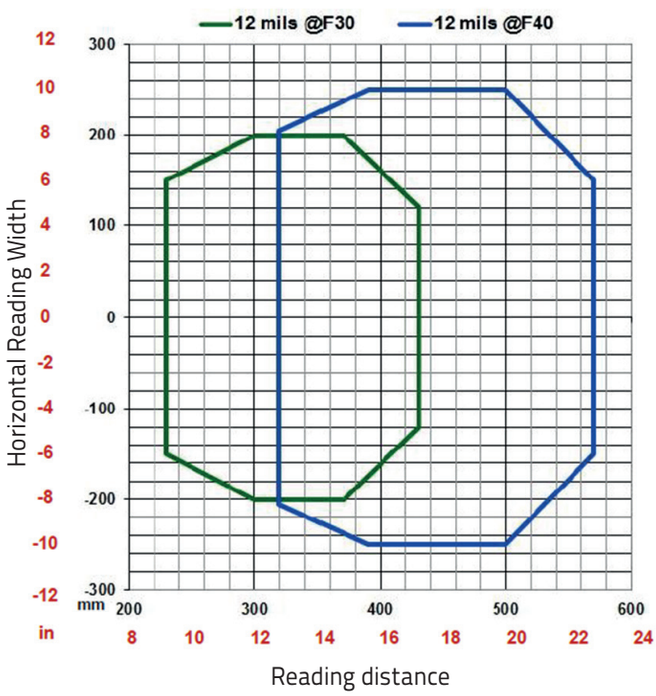

DS5100-1x00

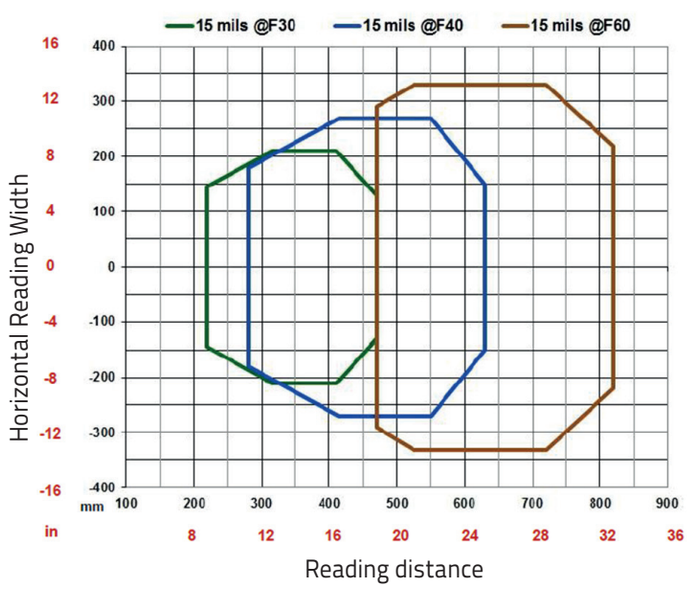

READING DIAGRAMS

MEDIUM RANGE MODEL

DS5100-1x00

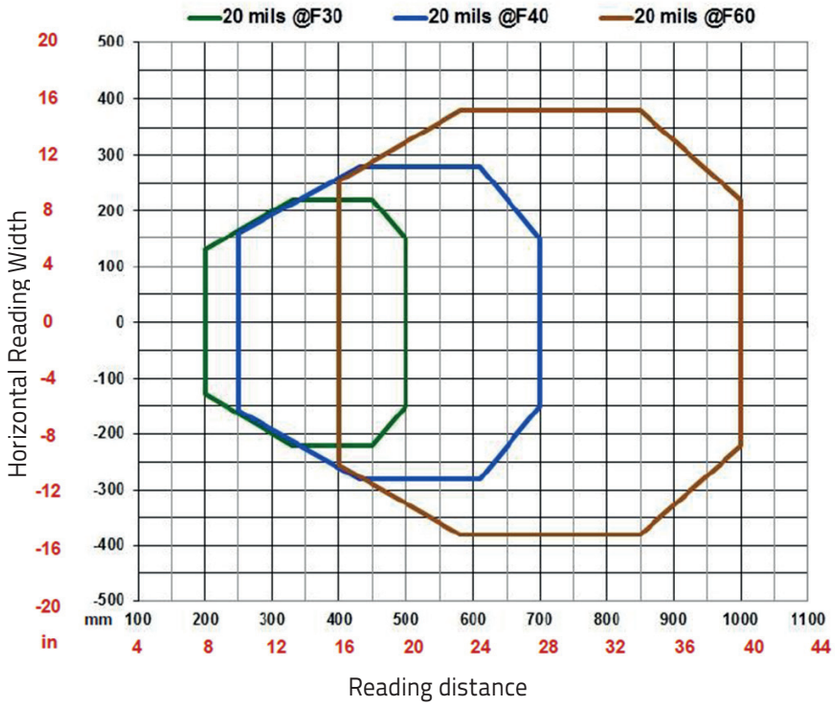

LONG RANGE MODEL

DS5100-2X00

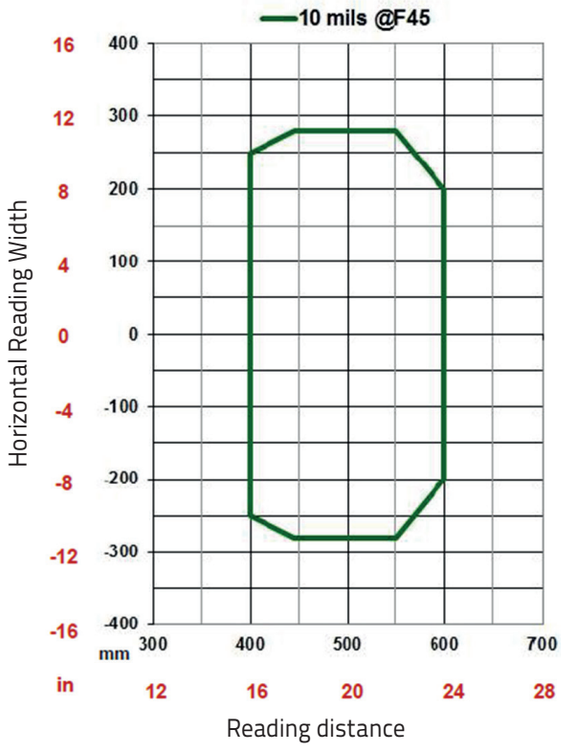

DS5100-2X00

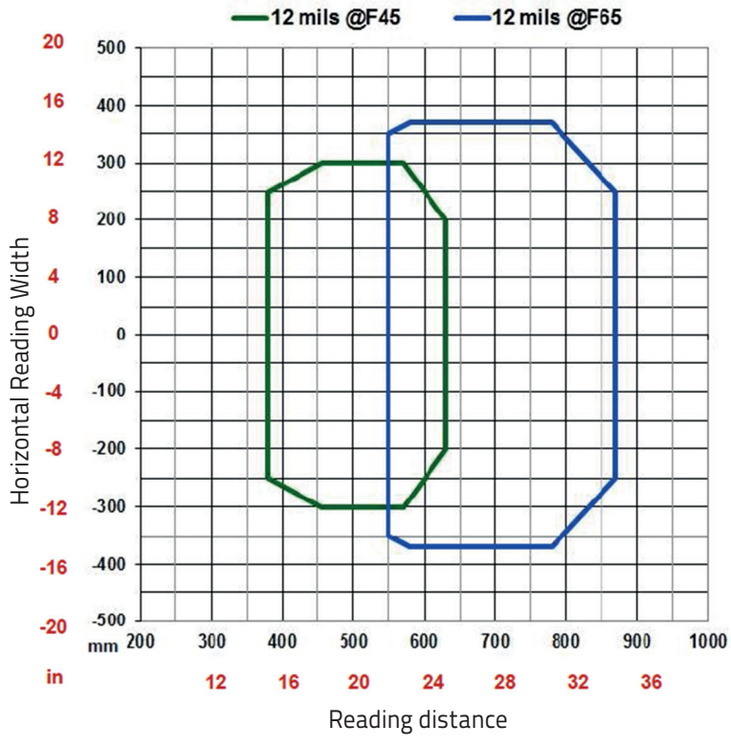

READING DIAGRAMS

LONG RANGE MODEL

DS5100-2x00

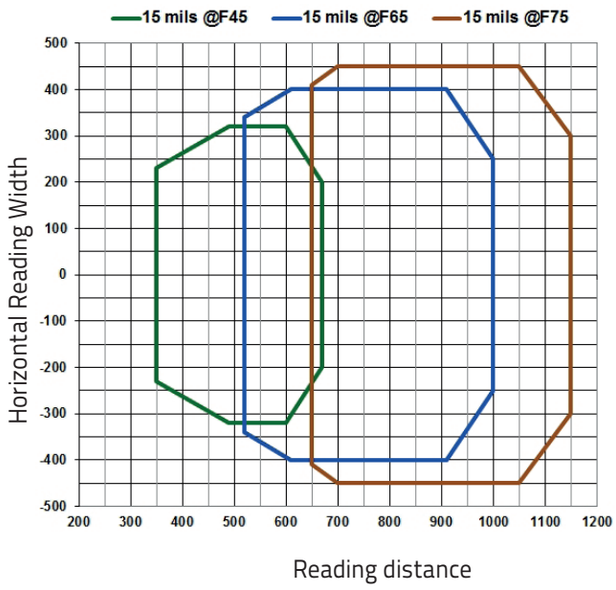

DS5100-2x00

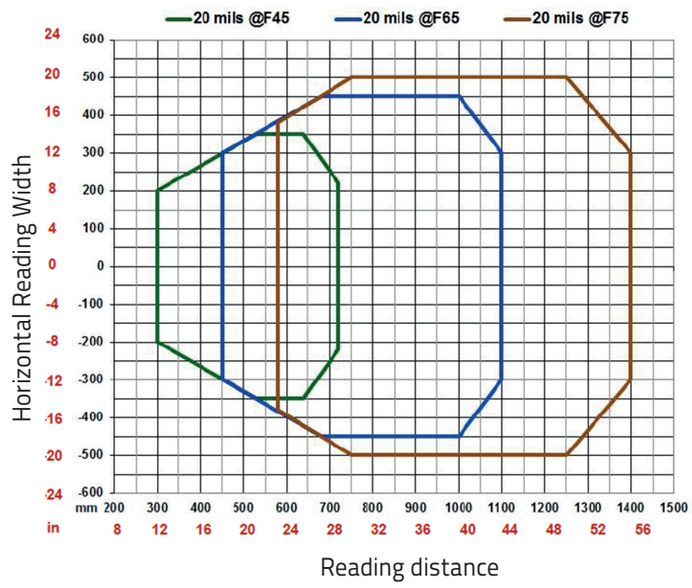

DIMENSIONS

LINEAR ETHERNET MODEL

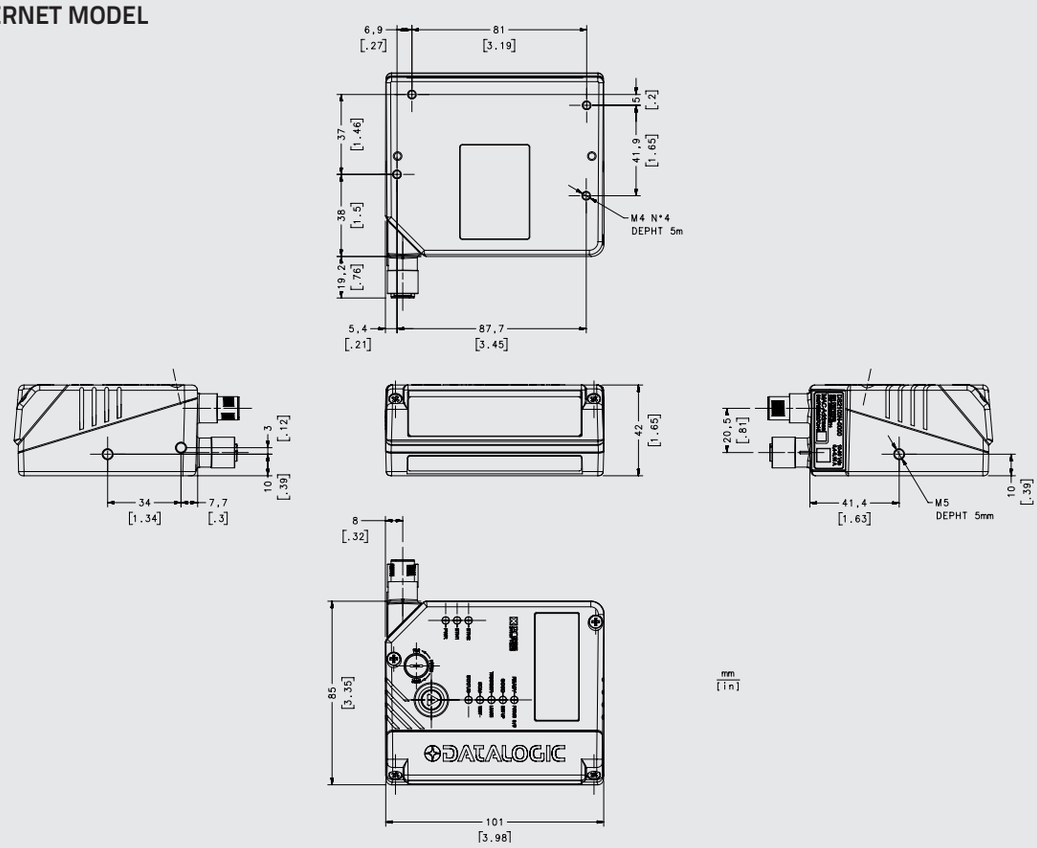

DIMENSIONS

LINEAR PROFINET MODEL

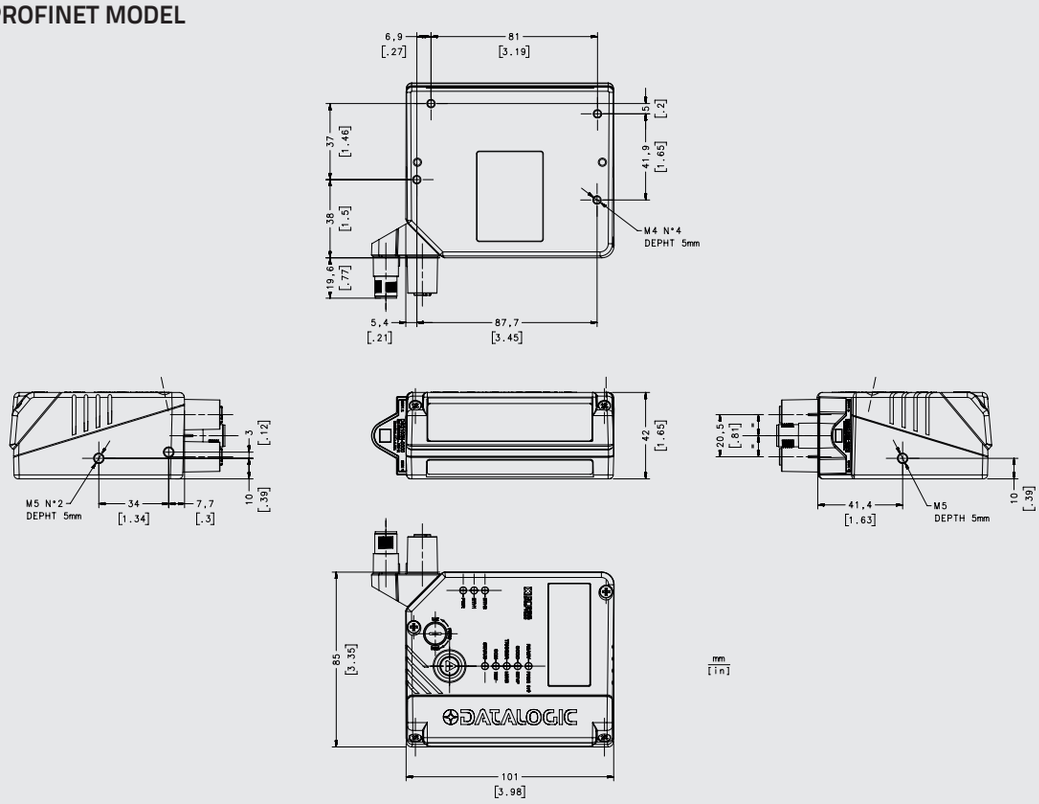

OSCILLATING MIRROR SERIAL MODEL

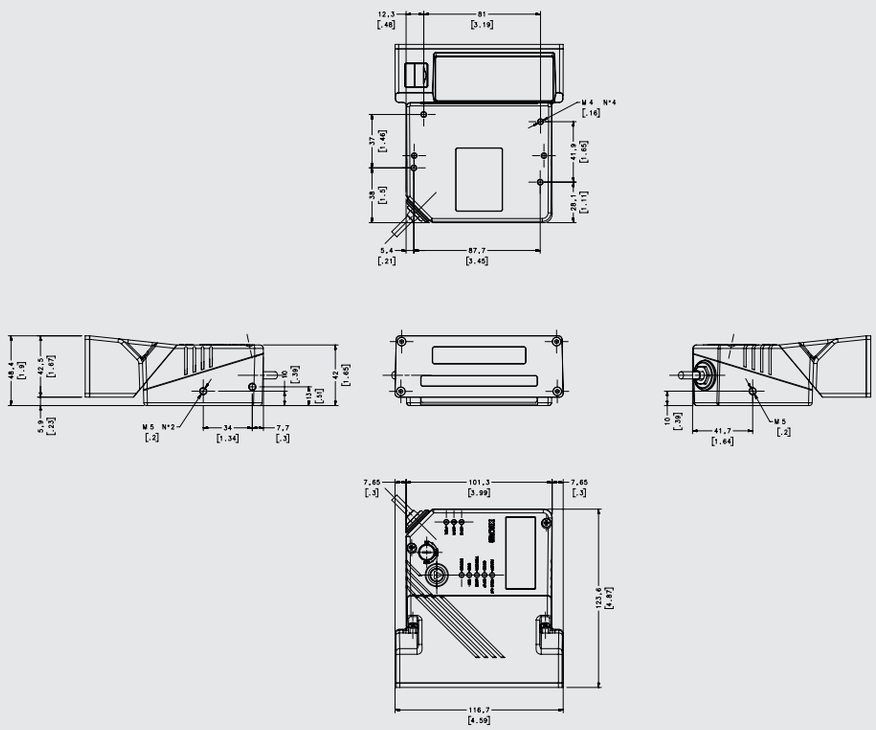

DS5100™

DATALOGIC

MODELS

ORDER NO.	DESCRIPTION
931061334	DS5100-1300 MEDIUM RANGE, ETH
931061335	DS5100-1320 MEDIUM RANGE, ETH, OM
931061336	DS5100-2300 LONG RANGE, ETH
931061337	DS5100-2320 LONG RANGE, ETH, OM
931061338	DS5100-1400 MEDIUM RANGE, PNET
931061339	DS5100-1420 MEDIUM RANGE, PNET, OM
931061340	DS5100-2400 LONG RANGE, PNET
931061341	DS5100-2420 LONG RANGE, PNET, OM
931061342	DS5100-1305 MEDIUM RANGE, ETH, SUBZERO
931061343	DS5100-1325 MEDIUM RANGE, ETH, OM, SUBZERO
931061344	DS5100-1200 MEDIUM RANGE, SER
931061345	DS5100-1220 MEDIUM RANGE, SER, OM
931061346	DS5100-2200 LONG RANGE, SER
931061347	DS5100-2220 LONG RANGE, SER, OM

DS5100 - XXXX

Reading Range
1 = Medium
2 = Long

Optic Version
0 = Linear
2 = Oscillating Mirror

Special Features
0 = Standard
5 = Subzero

Communication Interface
2 = SER: RS232/RS485main + RS232aux
3 = ETH: Built-in Ethernet; PNET 1 port: Profinet I/O; SER RS232/RS485main + RS232aux
4 = PNET 2 ports: Profinet IO; EBC Network

ACCESSORIES

ORDER NO.	DESCRIPTION	PART NUMBER
	Mirrors	
GFC-40	105° Deflection Mirror (only for DS5100-XX00 Linear readers)	93ACC1785
GFC-400	ADJ MIRROR CONTACT READING (only for DS5100-XX00 Linear readers)	93ACC1867
	Brackets	
BK-4000	L-Shape Bracket	93ACC1837
BK-4001	U-Shape Bracket	93ACC1838
	Controllers	
SC4000-1000	ID-NET CONTROLLER STD	935201000
SC5000-1000	Standard System Controller	935750001
SC5000-1100	Profibus System Controller	935750002
SC5000-1200	Profinet System Controller	935750003
	Connection Boxes	
Connection Box CBX100 with backup module BM100, Modular Connection Box CBX500 with display module BM150 and connectivity modules (DeviceNet, CANOpen, PROFI-BUS, Modbus, Ethercat, CC-Link) Quick Link QL and QLM slave and Master		

The DS5100 uses the same accessories of DS4800 for complete backwards compatibility.
For more details on the accessories please see the DS5100 Reference Manual.

Rev. 00, 10/2017

The company endeavours to continuously improve and renew its products; for this reason the technical data and contents of this catalogue may undergo variations without prior notice. For correct installation and use, the company can guarantee only the data indicated in the instruction manual supplied with the products.