REFERENCE MANUAL

> DS6400

DATALOGIC

Datalogic S.r.l.
Via S. Vitalino 13
40012 Calderara di Reno
Bologna - Italy

DS6400 Reference Manual

Ed.: 07/2017

© 2003 – 2017 Datalogic S.p.A. and/or its affiliates ◆ ALL RIGHTS RESERVED. ◆ Without limiting the rights under copyright, no part of this documentation may be reproduced, stored in or introduced into a retrieval system, or transmitted in any form or by any means, or for any purpose, without the express written permission of Datalogic S.p.A. and/or its affiliates.

Datalogic and the Datalogic logo are registered trademarks of Datalogic S.p.A. in many countries, including the U.S.A. and the E.U.

Genius, PackTrack, Step-a-Head, FLASH, ACR, and ID-NET are trademarks of Datalogic S.p.A. and/or its affiliates. All other trademarks and brands are property of their respective owners.

Datalogic shall not be liable for technical or editorial errors or omissions contained herein, nor for incidental or consequential damages resulting from the use of this material.

07/07/17

CONTENTS

REFERENCES vi
Reference Documentation vi
Support Through The Website vi
Patents vi

COMPLIANCE vii
Electrical Safety vii
Laser Safety vii
Power Supply viii
CE Compliance ix
FCC Compliance ix

GENERAL VIEW x

GUIDE TO INSTALLATION xiv
Point-to-Point Installation xiv
Master/Slave Lonworks Installation xv

1 INTRODUCTION 1
1.1 Product Description 1
1.2 Applications 2
1.3 Model Description 3
1.4 Oscillating Mirror Models 4
1.5 Indicators 6
1.6 Keypad and Display 6
1.6.1 Internal Net 7
1.6.2 Test Mode 7
1.6.3 PackTrack (Auto) 8
1.7 Auto PackTrack™ Calibration for Reading Station Using Scanner Menu 9
1.7.1 Auto PackTrack Conditions and Limits 9
1.7.2 Auto PackTrack Parameter Descriptions 10
1.7.3 Auto PackTrack Setup 11
1.8 Accessories 14

2 INSTALLATION 16
2.1 Package Contents 16
2.2 Mechanical Mounting 17
2.2.1 Mounting the Scanner 17
2.2.2 Mounting the Scanner with Accessories 20
2.3 Positioning the Scanner 22
2.3.1 16° Skew Positioning 23
2.3.2 45° Skew Positioning 24

3 CBX ELECTRICAL CONNECTIONS 25
3.1 Power Supply 27
3.2 Main Serial Interface 27
3.2.1 RS232 Interface 28
3.2.2 RS485 Full-Duplex Interface 29
3.2.3 RS485 Half-Duplex Interface 30
3.3 Auxiliary RS232 Interface 32
3.4 Inputs 33

3.4.1 Code Verifier 37
3.5 Outputs 37
3.6 User Interface - Host 40

4 CUSTOM CABLE ELECTRICAL CONNECTIONS 41
4.1 Power Supply 43
4.2 Main Serial Interface 43
4.2.1 RS232 Interface 44
4.2.2 RS485 Full-Duplex Interface 45
4.2.3 RS485 Half-Duplex Interface 46
4.3 Auxiliary Interface 48
4.4 Inputs 48
4.4.1 Code Verifier 51
4.5 Outputs 51
4.6 User Interface 53

5 LONWORKS CONNECTIONS 54
5.1 Network Termination 55
5.2 Lonworks Interface 55

6 FIELDBUS CONNECTIONS 58
6.1 Ethernet Interface 58
6.2 Ethernet Interface (older models) 59
6.3 DeviceNet Interface 61
6.4 Profibus Interface 62

7 TYPICAL LAYOUTS 63
7.1 Local Lonworks Network 63
7.1.1 Small Synchronized Network 64
7.1.2 Multidata Network 66
7.1.3 Fieldbus Networks 67

8 SOFTWARE CONFIGURATION 69
8.1 Genius™ Installation 69
8.2 Guide to Rapid Configuration 69
8.2.1 Wizard for Quick Reader Setup 69
8.2.2 Genius™ Network Setup Through Master 72
8.2.3 Alternative Slave Address Assignment 77
8.3 Advanced Genius™ Configuration 77
8.3.1 Genius™ Shortcuts for Network Configuration 78
8.4 Parameter Default Values 80

9 READING FEATURES 84
9.1 DS6400 FLASH™ Dynamic Focus 84
9.1.1 Fixed Mode 84
9.1.2 Continuous Mode 84
9.1.3 Triggered Mode 85
9.1.4 D-FLASH™ Mode 85
9.2 Advanced Code Reconstruction (ACR™ 4) 86
9.2.1 Tilt Angle for Advanced Code Reconstruction 86
9.3 PackTrack™ 87
9.3.1 Auto PackTrack™ Calibration for Reading Station Using DLAPC 89
9.3.2 Manual PackTrack™ Calibration for DS6400 Scanner Using SPY 96
9.3.3 PackTrack™ Calibration for DS6400 Oscillating Mirror Models 99
9.4 Performance 100

9.4.1 Reading Conditions 100
9.5 Reading Diagrams 102
9.5.1 DS6400 Standard Model 103
9.5.2 DS6400 Oscillating Mirror Model 113

10 MAINTENANCE 123
10.1 Cleaning 123
10.2 External Memory Backup & Restore 123
10.3 Automatic Scanner Replacement (ASR) 123
10.3.1 ASR Network Configuration 124
10.3.2 Scanner Replacement Procedure 124

11 TROUBLESHOOTING 125

12 TECHNICAL FEATURES 128

A ALTERNATIVE LAYOUTS 130
Point-to-Point 130
ID-NET™ Gateway 132
Pass Through 133
RS232 Master/Slave 134
Multiplexer 136

GLOSSARY 137

INDEX 140

REFERENCES

REFERENCE DOCUMENTATION

The documentation related to the DS6400 management is listed below:

- CBX100/CBX500 Installation Manuals
- PWR series power supply unit Installation Manuals
- Document about the Ethernet connectivity
- Document about the Profibus connectivity
- ID-NET™ Fixed Baudrate Application Note
- GFC-60 90° deflecting mirror
- GFC-600 90° deg. mirror close distance
- Help On-Line in PDF format

SUPPORT THROUGH THE WEBSITE

Datalogic provides several services as well as technical support through its website. Log on to **www.datalogic.com** and click on the **SUPPORT** > **Unattended Scanning Systems** category link. From this page you can select your product model from the dropdown list which gives you access to:

- Downloads including Data Sheets, Manuals, Software & Utilities, and Drawings;
- Repair Program for On-Line Return Material Authorizations (RMAs) plus Repair Center contact information;
- Service Program containing details about Maintenance Agreements;
- Technical Support through email or phone.

PATENTS

See www.patents.datalogic.com for patent list.

This product is covered by one or more of the following patents:

Utility patents: EP0789315B1, EP0959426B9, EP1217571B1, EP1300798B1, GB2345568B, JP4033958B2, JP4376353B2, JP4451592B2, US5992740, US6056198, US6273336, US6347740, US6394352, US6443360, US6629639, US6742710, US7161685, US7195162, US7654460.

COMPLIANCE

ELECTRICAL SAFETY

This product conforms to the applicable requirements contained in the European Standard for electrical safety EN-60950 at the date of manufacture.

WARNING

This symbol refers to operations that must be performed by qualified personnel only. *Example: opening the device.*

LASER SAFETY

The following information is provided to comply with the rules imposed by international authorities and refers to the correct use of the DS6400 scanner.

Standard Regulations

This scanner utilizes a low-power laser diode. Although staring directly at the laser beam momentarily causes no known biological damage, avoid staring at the beam as one would with any very strong light source, such as the sun.

Avoid that the laser beam hits the eye of an observer, even through reflective surfaces such as mirrors, etc.

This product conforms to the applicable requirements of both EN60825-1 and CDRH 21 CFR1040 at the date of manufacture. The reader is classified as a Class 2 laser product according to EN60825-1 regulations and as a Class II laser product according to CDRH regulations.

There is a safety device, which allows the laser to be switched on only if the motor is rotating above the threshold for its correct scanning speed.

WARNING

Use of controls or adjustments or performance of procedures other than those specified herein may result in exposure to hazardous visible laser light.

The laser light is visible to the human eye and is emitted from the window on the head of the scanner (Figure A).

Warning labels indicating exposure to laser light and the device classification are applied onto the body of the scanner (Figure A):

Laser Safety Label for Oscillating Mirror and Standard Models

Warning and Device Class Label

The identification label is applied onto the bottom part of the scanner (Figure A, 2):

Device Identification Label

Disconnect the power supply when opening the device during maintenance or installation to avoid exposure to hazardous laser light.

The laser diodes used in this device are classified as Class 3B laser products according to EN 60825-1 regulations and as Class IIIb laser products according to CDRH regulations. Any violation of the optic parts in particular can cause radiation up to the maximum level of the laser diode (35 mW at 630~680 nm).

POWER SUPPLY

This product is intended to be installed by Qualified Personnel only.

For all DS6400 models:

This device is intended to be supplied by a UL Listed Power Unit marked “Class 2” or LPS power source, which supplies power directly to the scanner via the 25/26-pin connector.

This scanner must be supplied by a Class II Power Supply Unit conforming to the EN 60950 safety regulation.

CE COMPLIANCE

CE marking states the compliance of the product with essential requirements listed in the applicable European directive. Since the directives and applicable standards are subject to continuous updates, and since Datalogic promptly adopts these updates, therefore the EU declaration of conformity is a living document. The EU declaration of conformity is available for competent authorities and customers through Datalogic commercial reference contacts. Since April 20th, 2016 the main European directives applicable to Datalogic products require inclusion of an adequate analysis and assessment of the risk(s). This evaluation was carried out in relation to the applicable points of the standards listed in the Declaration of Conformity. Datalogic products are mainly designed for integration purposes into more complex systems. For this reason it is under the responsibility of the system integrator to do a new risk assessment regarding the final installation.

Warning: This is a Class A product. In a domestic environment this product may cause radio interference in which case the user may be required to take adequate measures.

FCC COMPLIANCE

Modifications or changes to this equipment without the expressed written approval of Datalogic could void the authority to use the equipment.

This device complies with PART 15 of the FCC Rules. Operation is subject to the following two conditions: (1) This device may not cause harmful interference, and (2) this device must accept any interference received, including interference which may cause undesired operation.

This equipment has been tested and found to comply with the limits for a Class A digital device, pursuant to part 15 of the FCC Rules. These limits are designed to provide reasonable protection against harmful interference when the equipment is operated in a commercial environment. This equipment generates, uses, and can radiate radio frequency energy and, if not installed and used in accordance with the instruction manual, may cause harmful interference to radio communications. Operation of this equipment in a residential area is likely to cause harmful interference in which case the user will be required to correct the interference at his own expense.

EAC COMPLIANCE

Customs Union:
The CU Conformity certification has been achieved; this allows the Product to bear the Eurasian mark of conformity.

BUREAU OF INDIAN STANDARD (BIS)

Self Declaration – Conforming to IS 13252 (Part 1):2010, R-41009288.

GENERAL VIEW

DS6400

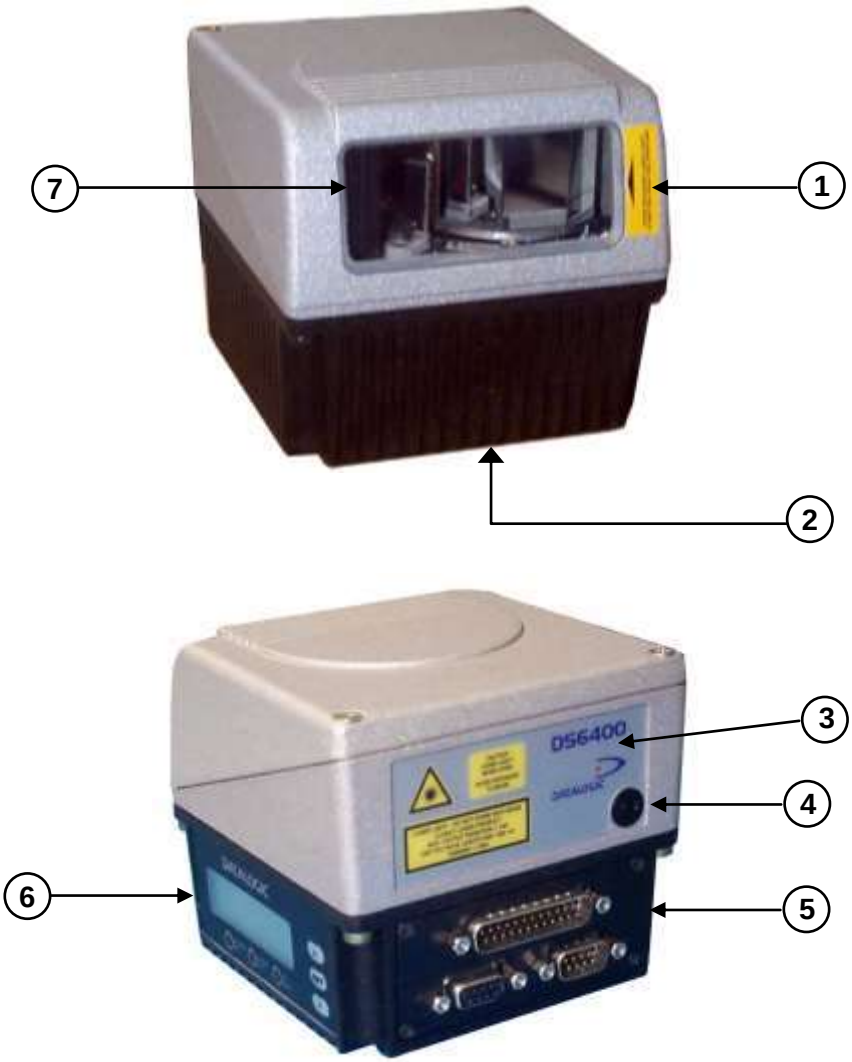

Figure A - DS6400

1. Laser Safety Label
2. Identification Label
3. Warning and Device Class Label
4. Service Cap
5. Connector Panel
6. Display and Keypad Panel
7. Laser Beam Output Window

DS6400

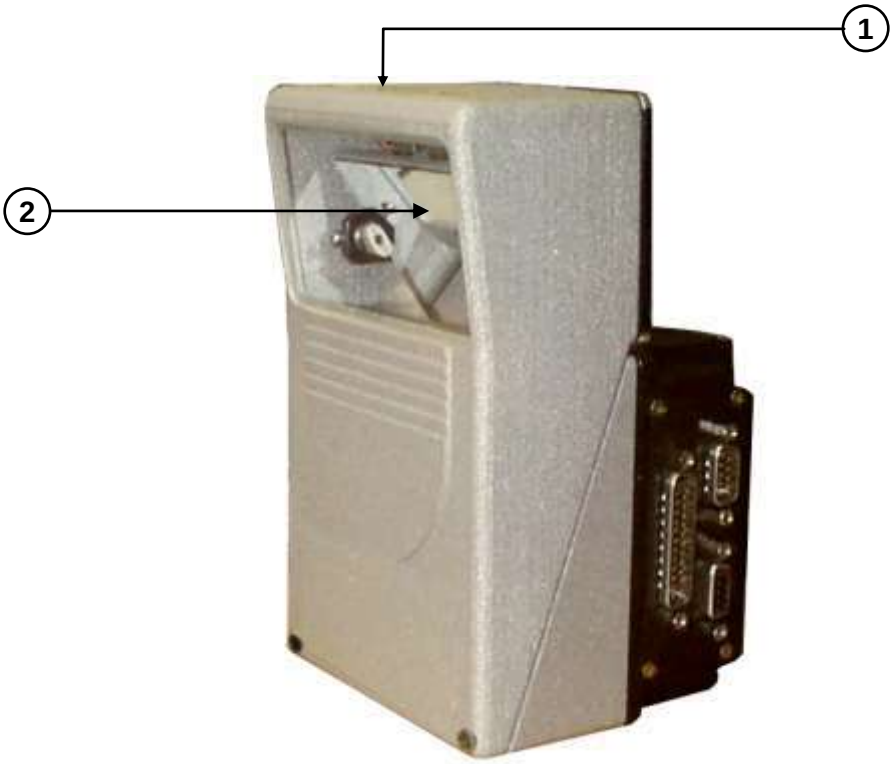

Figure B - DS6400 Oscillating Mirror Version

1 Laser Safety Label

2 Laser Beam Output Window

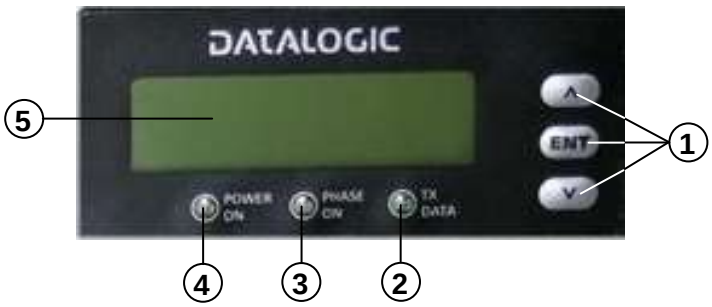

Figure C – Display and Keypad Panel

1 Programming Keypad

2 TX Data LED

3 Phase On LED

4 Power On LED

5 LCD Display

Figure D – Connector Panel for Master/Slave Models

1 Main/Aux. Interface 25-pin D-Sub male connector

2 Lonworks 9-pin male connector

3 Lonworks 9-pin female connector

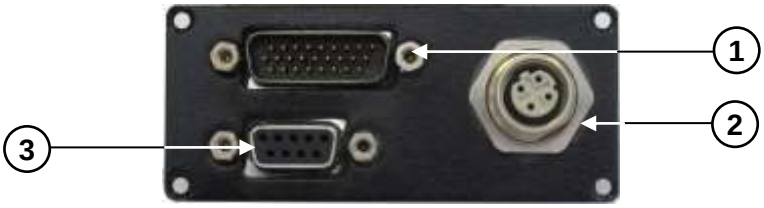

Figure E – Connector Panel for Ethernet Models

1 Main/Aux. Interface 26-pin D-Sub male connector

2 Ethernet 4-pin female connector

3 Lonworks 9-pin female connector

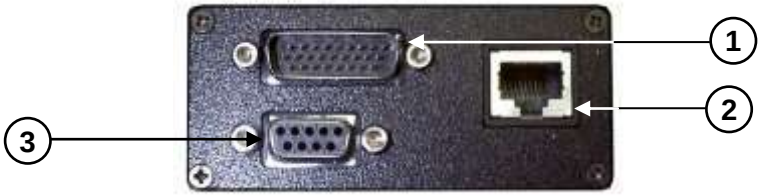

Figure F – Connector Panel for (older) Ethernet Models

1 Main/Aux. Interface 26-pin D-Sub male connector

2 RJ45 modular connector for Ethernet Interface

3 Lonworks 9-pin female connector

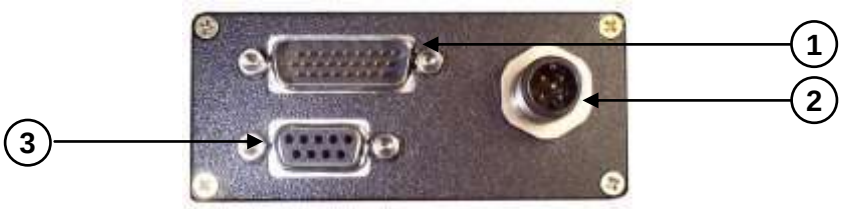

Figure F – Connector Panel for DeviceNet Models

1. Main/Aux. Interface 26-pin D-Sub male connector
2. DeviceNet 5-pin male connector
3. Lonworks 9-pin female connector

Figure G – Connector Panel for Profibus Models

1. Main/Aux. Interface 26-pin D-Sub male connector
2. Profibus 9-pin female connector (white)
3. Lonworks 9-pin female connector

GUIDE TO INSTALLATION

POINT-TO-POINT INSTALLATION

The following can be used as a checklist to verify all the necessary steps to complete installation of the DS6400 scanner.

1) Read all information in the section “Compliance” at the beginning of this manual.

2) Correctly mount the scanner using the bracket provided according to the information in par. 2.2 and position it at the correct reading distance according to your model as shown in par. 2.3 and par. 9.5.

3) Make electrical connections to your DS6400 scanner by:

   a) Connecting the DS6400 scanner to the CBX100/CBX500 by means of one of the CAB-Sxx (or CAB-F0x depending on the model) cables provided as an accessory (see par. 1.8).

   b) Providing correct and complete system cabling through the CBX100/CBX500 according to the signals necessary for the layout of your application (trigger, inputs, outputs).

      - Cabling: Power, Interface, Inputs, Outputs, etc. For further details, see chapter 3 (chapter 4 for custom cabling).
      - Alternative Layouts: Point-to-Point, Pass Through, RS232 Master/Slave, Multiplexer. See appendix A for layout references.

4) Configure the DS6400 scanner by installing and running the Genius™ configuration program from the CD-ROM provided. See chapter 8 and the Help On-Line for details. The main steps are:

   - Select the codes to be read
   - Set-up the communication parameters
   - When PackTrack™ is required, set the PS Offset and Position parameters
   - Define data formatting parameters

NOTE	*Fine tuning of the scanner position for barcode reading can be accomplished by performing a test through the SPY configuration tool in Genius™.*

5) Exit the configuration program and run your application.

The installation is now complete.

MASTER/SLAVE LONWORKS INSTALLATION

The following can be used as a checklist to verify all the steps necessary to complete installation of the DS6400 scanner in a Master/Slave Lonworks network.

1) Read all information in the section “Compliance” at the beginning of this manual.

2) Correctly mount the scanner using the bracket provided according to the information in par. 2.2 and position it at the correct reading distance according to your model as shown in par. 9.5.

3) Make electrical connections to your DS6400 scanner by:
   a) Connecting the DS6400 Master scanner to the CBX100/CBX500 by means of one of the CAB-Sxx (or CAB-F0x depending on the model) cables provided as an accessory (see par. 1.8).
   b) Correctly terminating the DS6400 Master reader according to the information given in par. 5.1 and par. 7.1.
   c) Completing the system wiring adding as many slave scanners as required by your system layout (refer to par. 7.1).
   d) Correctly terminating the last DS6400 Slave reader of the network according to the information given in par. 5.1 and par. 7.1.

4) Install and run the Genius™ configuration program from the CD-ROM provided. Configure the Local Lonworks Network using one of the procedures given below:
   - Configure the entire network through the Master as described in par. 8.2.2;
   - Configure the Master as described in par. 8.2.2 and locally define each slave scanner address as described in par. 8.2.3.
   - Define each scanner, master and slaves (with their addresses), by using the scanner keypad according to the information given in par. 1.6.1.

5) Configure the Master scanner through the Genius™ program. The main steps are:
   - Select the codes to be read
   - Set-up the communication parameters
   - When PackTrack™ is required, perform PackTrack™ calibration, see par. 9.3.1.
   - Define data formatting parameters

6) Configure each Slave scanner through the Master scanner using Genius™. The main steps are:
   - Select the codes to be read
   - When PackTrack™ is required, perform PackTrack™ calibration, see par. 9.3.1.

NOTE

Fine tuning of the scanner position for barcode reading can be accomplished by performing a test through the SPY configuration tool in Genius™.

7) Send the configuration to the Master.

8) Perform the External Memory Backup Procedure for system backup purposes (see par. 10.2). For backward compatibility you can perform the ASR Network Configuration procedure for system backup purposes (see par. 10.3.1).

9) Exit the configuration program and run your application.

The installation is now complete.

1 INTRODUCTION

1.1 PRODUCT DESCRIPTION

The DS6400 is a high performance laser scanner in a complete range of industrial bar code readers offering an innovative and modular solution in terms of reading performance, connectivity and maintenance, in addition to a completely new hardware and software platform.

The DS6400 has been specifically designed for simple installation, easy use and flexibility. An innovative mechanical design together with the Datalogic patented Step-a-Head™ feature make it possible to rotate the reader head and the decoder base independently from each other. Step-a-Head™ enables the DS6400 to always be installed in the ideal position, by modifying the orientation of the connector panel while leaving the laser window in the desired position. The need for space is minimized and installation is easier.

The DS6400 has an innovative linear motor designed to control the focus position of the scanner via software. This dynamic system, called FLASH™, is able to move the focus position rail to rail, from the minimum position to the maximum position, in less than 10 msec. In typical applications, where a DOF <1 meter is required, the focus position is adjusted in 4 msec.

The DS6400 can read all most popular barcodes even in the most difficult conditions, thanks to a new generation decoder and code reconstruction technology (ACR™ 4).

This reader is also offered in a model with an integrated SW programmable oscillating mirror.

Great attention has been given to built-in connectivity for market standards. A Local Lonworks network for scanner connectivity (all versions), and a Fieldbus network (Ethernet, DeviceNet, or Profibus) for host connectivity (dedicated versions) have been integrated in the decoder base.

Some of the main features of DS6400 are listed below:

- scanning speed up to 1200 scans/sec;
- 2 serial communication interfaces
- reading all popular codes;
- supply voltage from 15 to 30 Vdc;
- electrical connection through connectors;
- high speed Lonworks connectivity for Master/Slave layout;
- Fieldbus models (Ethernet, Profibus) with built-in connectivity;
- programmable in several different operating modes to suit the most various barcode reading system requirements;
- light source: solid state laser diode; the light emitted has a wavelength between 630~680nm.
- IP64 protection class of the enclosure (IP50 for older RJ45 Ethernet models).

1.2 APPLICATIONS

The DS6400 barcode reader is specifically designed for industrial applications and for all cases requiring high reading performance such as:

- code reconstruction
- reading of codes covered by plastic film
- reading of codes with a wide depth of field
- reading of high resolution codes positioned at long distances from the reader
- code reading on fast moving objects

DS6400 is designed for both single-reader layouts and multi-reader layouts. For typical layouts see chapter 7 and appendix A.

Feature	Benefit
ACR™	• Advanced Code Reconstruction technology allows the reading of low aspect ratio labels placed anywhere on a parcel and enhances the readability of poorly printed or damaged codes.
PackTrack™	• PackTrack™ is a Datalogic patented parcel tracking system which improves the reading features in omnidirectional stations. In particular, PackTrack™ manages 6-sided reading systems when it is impossible to detect the real position of the code on the parcel, thus overcoming the need for external accessories essential in traditional tracking systems.
FLASH™	• A dynamic focus system controlled by software which is able to move the focus position from the absolute minimum position to the absolute maximum position, in less than 10 msec., typical applications can be adjusted in 4 msec.
Modular solution with separated head and base and Step-a-Head™ feature	• Possibility to select the combination of head and base that best fits the needs of the application. • Great scalability of the offer. • Down time cost reduction, since the decoder base works even if the head has been removed. • Easy maintenance. In case of replacement of the head, all the configuration parameters are stored in the base, and the scanner is automatically configured. • Easy installation with the minimum room needed.
Reading on pallets or large objects where a long reading distance / wide reading field are needed	• DS6400 with FLASH™ dynamic focusing system.
Reading parcels on conveyors	• DS6400 implements the Packtrack™ functionality which leads to an increase of the plant production as a result of the augmented system throughput.

Feature	Benefit
Master working as a Multiplexer on high speed Lonworks bus	• Great competitiveness of the offer, since the cost of an external multiplexer is saved; • High data transfer on an industrial, reliable bus running at 1,2 Mbit/sec.
Genius™ Configuration SW	• Reduced learning time, with an easy wizard approach; • Multilanguage platform; • All the configuration parameters stored into the scanner; • Not dependent on the Physical interface.
Energy Saving	• A software parameter group which allows management of the energy saving feature. In particular, it allows turning on/off the motor and laser of all network scanners according to the selected digital input, encoder, or communication channel. • The time required to restart the system is less than 1 minute independently from the number of scanners connected. • It is suggested to use this parameter for example when the conveyor is stopped for a lengthy period.

1.3 MODEL DESCRIPTION

The DS6400 scanner is available in versions that differ in regard to the following characteristics:

- Optical Model (Head)
- Decoder Model (Base)

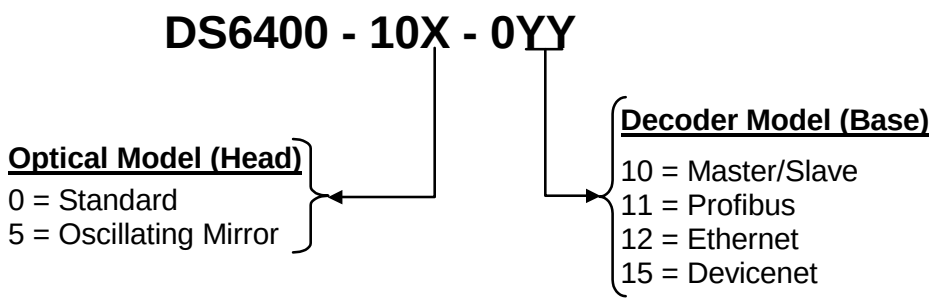

1.4 OSCILLATING MIRROR MODELS

Oscillating mirror models are used when coverage of a large reading area is required, mainly in picket fence applications.

The DS6400 scanner mounts a dedicated optic head with integrated oscillating mirror driven by a linear motor. The speed, the precision, the repeatability, and the reliability of this driving technology assure high level performance.

The oscillating mirror is completely software controlled and software programmable. The Genius™ software tool allows adjusting the linear motor speed (oscillating frequency) and the upper and lower limits of the oscillation by defining the top and bottom line limit angles.

When the oscillating mirror is programmed to read barcode labels at very small angles, position the reader to **assure at least 10°** for the Skew angle (see par. 2.3). This angle refers to the most inclined or external laser line, so that all other laser lines assure more than 10° Skew. This avoids the direct reflection of the laser light emitted by the reader.

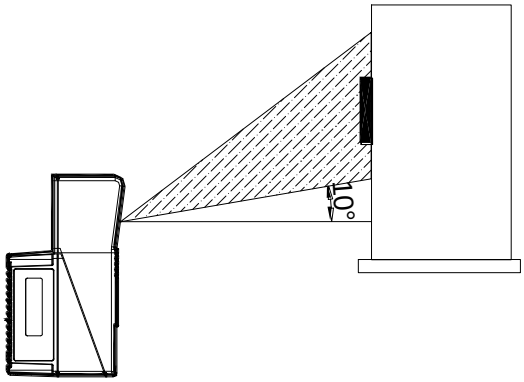

Figure 1 – Oscillating Mirror Skew Angle

Otherwise, the scanner can be mounted at an angle of inclination of 17.5° in order to attain symmetrical deflection ranges.

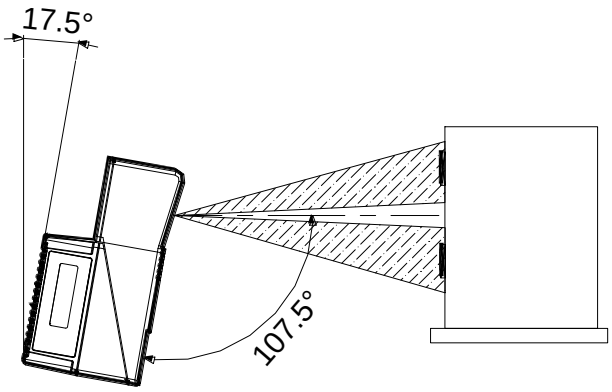

Figure 2 - Oscillating Mirror Reading Position

In the above case, the zone where the scan line is perpendicular to the reflecting surface corresponds to a neutral zone at the center of the reading field.

The mirror can be deflected up to 40°. Oscillation with respect to the output window median axis is asymmetrical (see figure below).

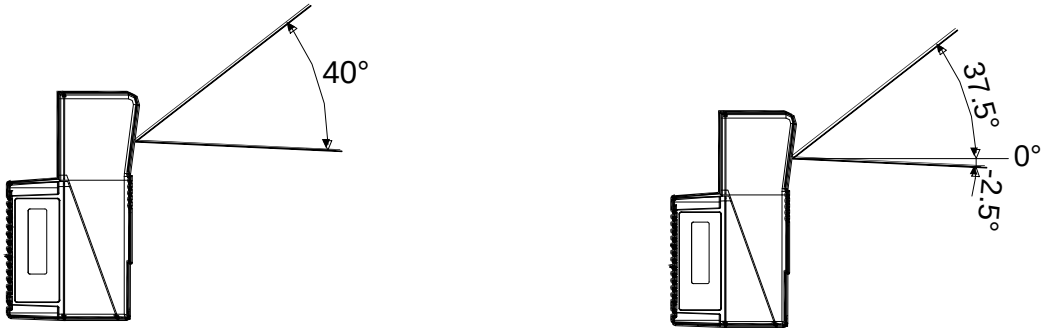

Figure 3 - Oscillating Mirror Maximum Aperture and Asymmetry

By configuring the oscillating speed up to the maximum value of 19 Hz, raster emulation can be performed for reading fast moving objects.

Hz	Max. Aperture
0-5	40°
6-10	30°
11-15	20°
16-19	10°

NOTE

By limiting the raster width to the minimum necessary, the number of scans on the reading surface is increased.

Oscillating angles are selected in software where the minimum and maximum angles correspond to –2.5° and +37.5°.

The scanner can be tilted in order for the 17.5° software setting to correspond with the 0° horizontal plane.

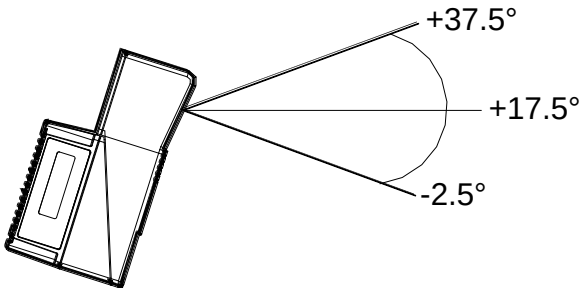

Figure 4 - Oscillating Mirror Extreme Angle Positions

These models provide higher scanning speed (1200 scans/sec) compared to standard models and the reading performance is not adversely affected by the oscillating mirror.

The following example represents the selection of an angle of +10° for the bottom line and an angle of +20° for the top line (see figure below).

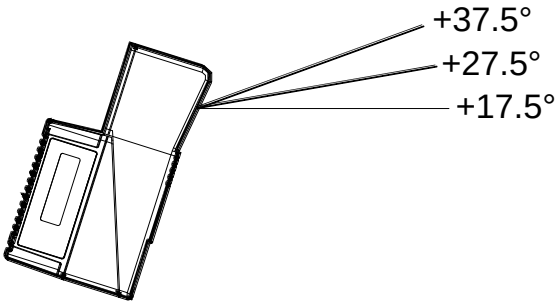

Figure 5 - Oscillating Mode

Refer to chapter 2 for more information on scanner mounting and positioning.

1.5 INDICATORS

The DS6400 has three LEDs on the Display and Keypad panel. The indicators have the following functions:

POWER ON	(red)	Indicates the scanner is turned on.
PHASE ON	(yellow)	Indicates the external presence sensor is active.
TX DATA	(green)	Indicates data transmission on the main serial interface.

1.6 KEYPAD AND DISPLAY

The DS6400 keypad allows entering a menu for selection of one of the following functions:

- Welcome: shows the current software release and operating mode;
- Autolearn: starts the procedure making it possible to obtain an automatic, accurate and fast configuration of DS6400 without the necessity of directly checking/modifying the relevant parameters;
- Internal Net: defines scanner function within the local Lonworks network (see below);
- Ethernet Mode: allows setting the scanner IP address of the Master scanner to be used within the Host network;
- LCD Contrast: sets the LCD contrast;
- Bus: allows setting the scanner address (value range 0-125) to be used in a Profibus network;
- Test Mode: allows verifying the scanner reading position and features (see below).
- PackTrack: allows setting the Auto PackTrack Calibration procedure (see below).

The same settings may be performed by using the Genius™ program (see chapter 8 for details).

1.6.1 Internal Net

This submenu can be used as an alternative to configuration through Genius™, to assign the DS6400 scanner within a local Lonworks master/slave network.

It allows defining the scanner function (slave/master) within the Lonworks network and, if configured as Slave, its address.

To enter the Internal Net submenu and configure the scanner follow the given procedure:

1) Press and hold both the ▲ (up arrow) and ▼ (down arrow) keys for about 2 seconds to enter the Main menu;
2) Use the ▲ (up arrow) or ▼ (down arrow) key to select the “Internal Net” item, then press the ENT (enter) key to confirm;
3) Use the ▲ (up arrow) or ▼ (down arrow) key to select the “LonWAddrSel”” item, then press the ENT (enter) key to confirm;
4) Use the ▲ (up arrow) or ▼ (down arrow) key to select your scanner function among “Master”, “Slave n”, “Slave jolly”, “Disabled”; then, press the ENT (enter) key to confirm;
5) Use the ▲ (up arrow) or ▼ (down arrow) key to select the “Exit” item, then press the ENT (enter) key to confirm. Repeat this step again to exit the Main Menu and return to the scanner current operating mode.

1.6.2 Test Mode

Test Mode is particularly advised during the installation phase, since it causes the reader to be continuously activated allowing verification of its reading features and its reading position with respect to the barcode.

To enter the Test Mode submenu and configure the scanner follow the given procedure:

1) Press and hold both the ▲ (up arrow) and ▼ (down arrow) keys for about 2 seconds to enter the Main menu.
2) Use the ▲ (up arrow) or ▼ (down arrow) key to select the “Test Mode” item, then press the ENT (enter) key to confirm. The reader enters Test Mode.
3) Press the ▲ (up arrow) key to exit the Test Mode.
4) Use the ▲ (up arrow) and ▼ (down arrow) key to select the “Exit” item, then press the ENT (enter) key to confirm. The scanner exits the Main Menu and returns to its current operating mode.

1.6.3 PackTrack (Auto)

This submenu can be used to execute the Automatic PackTrack Calibration procedure for the Reading Station when the Master scanner is in PackTrack or Continuous Operating Modes. Performing this procedure through the Keypad/Display Menu is an alternative to Automatic PackTrack Calibration through the DLAPC tool in Genius™, see Help On-Line.

NOTE

This scanner must first be configured as Master of the master/slave network (see par 1.6.1, "Internal Net" procedure).

To enter the PackTrack submenu and configure the scanner follow the given procedure:

1) Read Par 1.7.1 regarding Auto PackTrack Conditions and Limits.
2) Press and hold both the ▲ (up arrow) and ▼ (down arrow) keys for about 2 seconds to enter the Main menu;
3) Use the ▲ (up arrow) or ▼ (down arrow) key to select the “PackTrack” item, then press the ENT (enter) key to confirm;
4) Use the ▲ (up arrow) or ▼ (down arrow) key and the ENT (enter) key to select the items in the following table and set them according to your application. See par. 1.7.2 for details;
5) After all items are set, use the ▲ (up arrow) or ▼ (down arrow) key to select “Start”; then, press the ENT (enter) key to confirm. Follow the Procedure described in par. 1.7.3.

1.7 AUTO PACKTRACK™ CALIBRATION FOR READING STATION USING SCANNER MENU

1.7.1 Auto PackTrack Conditions and Limits

The Conditions and Limits for Auto PackTrack Calibration are summarized here for convenience and are also integrated into the following procedure descriptions:

- The following scanners are supported by Auto PackTrack Calibration: DS6400 (*see note below), DX6400 (*see note below), DS8100A, DX8200A.
- Before performing the Auto PackTrack Calibration procedure, if a system reset or power reset is performed, wait for all the scanners to be available (up to 60 sec.) before proceeding.
- Operating Mode of the Master must be either PackTrack or Continuous.
- Code 128 codes must be enabled on the Master with Label Length set to variable.
- If the system Presence Sensor and Encoder are used, the correct Encoder Step value must be set on the Master and the Presence Sensor must be connected to the CBX100/500 Input 1.
- If instead the PPA-8000 Photocell Array is used, it must be connected to the CBX100/500 I1 and I2 inputs, **the following parameters must be disabled on the Master**: Physical Encoder for PackTrack or Use Encoder for Continuous, **and the Encoder, if present, must be physically disconnected**.
- DX scanners which are calibrated automatically cannot be automatically replaced by DX scanners with a previous sw version (earlier than 6.80). You must either update the old scanner software prior to substitution, or complete the calibration manually, after installation, by setting the PSOffset and Direction parameters.

NOTE	*The autofocus feature of DS6400 and DX6400 scanners makes Auto PackTrack Calibration difficult, therefore to assure that the procedure can correctly calibrate these scanners, it is necessary to set a fixed focus value which allows the scanner to read all the label positions useful for its calibration.*

1.7.2 Auto PackTrack Parameter Descriptions

Menu	Branch	Default	Note
PackTrack			Automatic Packtrack Calibration procedure for the Reading Station
	Version	**2**	Select the version number of the PCT-8000 pack
	Cal Type	**XYZ**	XYZ calibration is forced.
	X Cal	**Absolute**	Absolute X position is forced.
	X Offset	**-**	Set the zero point of the X-axis (4 digits in mm)
	Sensor	**0**	Set the distance (3 digits in mm) between the photocells in the photocell array. If the system Presence Sensor and Encoder are used, set this parameter to 0.
	Start		Start the Auto PackTrack procedure
	Z Offset	**0**	Set a correction factor for the pack height (3 digits in mm)

The Auto PackTrack procedure when run from the scanner keypad, requires a system reset before the calibration is recognized. See the Auto PackTrack Setup procedure.

Version: the version of the PCT-8000 being used for calibration. This value can be read from the barcode labels on the PCT-8000. Each label has the value *vnnn* where *v* is the version number.

Cal Type: the XYZ calibration is forced. The coordinates for the three axes are calibrated.

NOTE

For Oscillating Mirror models the scan line must be parallel to the conveyor direction and only the Y calibration will be performed, (the X and Z axes will automatically be set to zero).

X Cal: the Absolute X position is forced. The X coordinate for all scanners is relative to the precise point (PackTrack Reference Point X, Y, Z = 0).

X Offset: The X Offset moves the Absolute X coordinate (X, Y, Z= 0) for all the scanners to the desired point along the X axis which will be measured in step 7 in par. 1.7.3.

Sensor: calibration will be performed either using the system Presence Sensor and Encoder (most cases), or the PPA-8000 Photocell Array, for systems where the Presence Sensor or Encoder are not present (typically Tilt-Tray or Cross-Belt applications).

NOTE

*The Auto PackTrack procedure **requires** using the PPA-8000 Photocell Array for all systems where either the Presence Sensor or the Encoder are absent (including Continuous Operating Mode and Cargoscan applications).*

If using the Presence Sensor and Encoder, the presence sensor must be connected to the CBX100/500 Input 1 and in this menu **Sensor** is set to **0**. The scanners Encoder Step parameter must also be set correctly.

If using the PPA-8000, in this menu you must set **Sensor** (the Photocell distance) to **165 mm**. The Photocell Array must be connected to the CBX100/500 I1 and I2 inputs (see the relative installation manual), **and the Encoder, if present, must be disconnected**.

Z Offset (if necessary): for packs that are elevated above the conveyor surface (for example on tilt trays), this parameter sets an offset for the height of a pack so that Z = 0 corresponds to the bottom of the pack.

1.7.3 Auto PackTrack Setup

After setting the initial parameters in the PackTrack menu the Auto PackTrack setup procedure can be started:

1. Press the ENT (enter) key at the *Start* item in the *PackTrack* menu.

2. Press the ENT (enter) key to confirm the action. The Master scanner sends the message to the Slave scanners and the Display shows the *Wait* message.

   After receiving the answer from all of the Slaves, the Master scanner shows the status of each node (of each scanner of the cluster) as in the example below.

I	**I**	**I**	**U**	**I**	**I**	**I**	**I**
A	**B**	**C**	**D**	**E**	**F**	**G**	**H**

   The slave scanners are listed on the second line as letters (**A**, **B**, **C**, etc.).
   On the first line above each scanner position a symbol indicates the scanner status according to the following convention:

U	cannot be calibrated	cannot be calibrated because not supported by scanner software version
U	can be calibrated	can be calibrated but the calibration procedure fails either barcode reading or verification
L	Lost	scanner stops responding during the procedure
I	Initial State	scanner ready to be calibrated
N	Not Verified	scanner calibrated but not verified
C	Calibrated	scanner is calibrated

NOTE

If the network is made up of more than 16 slaves, you can use the ▲ (up arrow) key to toggle between the lines.

3. At this point the Master scanner display allows to *Continue* or to *Stop* the procedure. You can switch between the previous display windows using the ▲ (up arrow) key.

   If there are any nodes that show as *U* or *L*, then you should *Stop* the procedure and correct the problem.

   If the nodes respond with *I*, *N*, or *C* then you can *Continue* with the procedure.

4. Press the ENT (enter) key to *Continue* the procedure. The Master scanner shows message *Let the parcel run*.

5. Place the PCT-8000 onto the moving conveyor, before the PS Line (reference point) and parallel to a conveyor edge (i.e. right-hand edge) with its arrow in the same direction as the conveyor movement. Let it pass through the reading station. The Master scanner shows the *Wait* message.

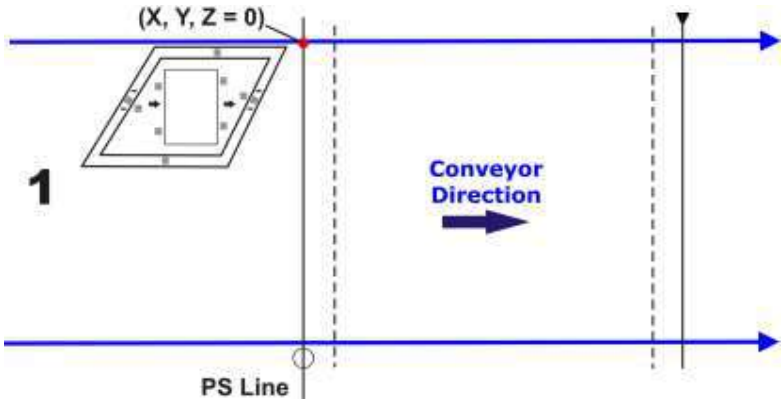

Figure 6 - PCT-8000 First Run

After elaborating the passage of the parcel, the Master scanner again shows the status of each node (of each scanner of the cluster) and then the *Continue* or *Stop* screen.

6. Repeat steps 3 - 5 changing the PCT-8000 X position (i.e. always before the PS Line (reference point) and parallel to a conveyor edge but changing to the left-hand edge and/or to the center of the conveyor), until the procedure terminates.

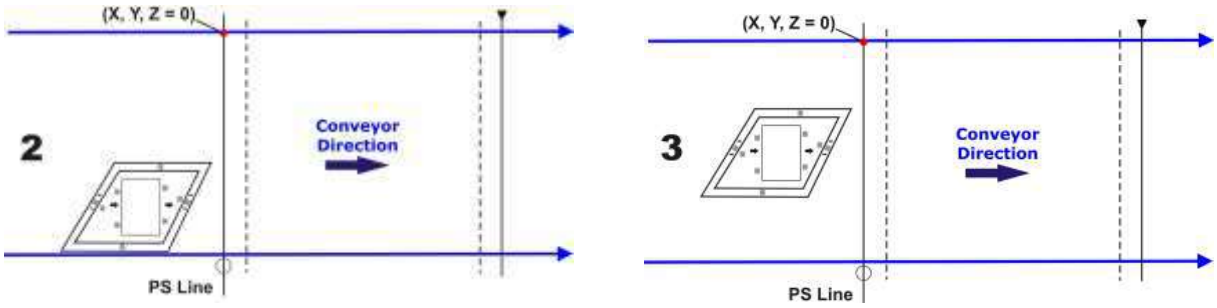

Figure 7 - PCT-8000 Second and Third Runs

Typically 3 passes are necessary.

7. At the last step in the sequence the display prompts to place a barcode label **centered** onto the physical X position (X Offset) on the conveyor. Press the ENT (enter) key to Continue. You have 2 minutes to read the code before the procedure ends automatically. Be careful that the barcode is not accidentally read in the act of placing it at the desired X Offset position, and assure that **it is read by only one scanner** (see the figure below). After placing the barcode label on the X coordinate, you may have to pass your hand or other opaque object over it to end this step.

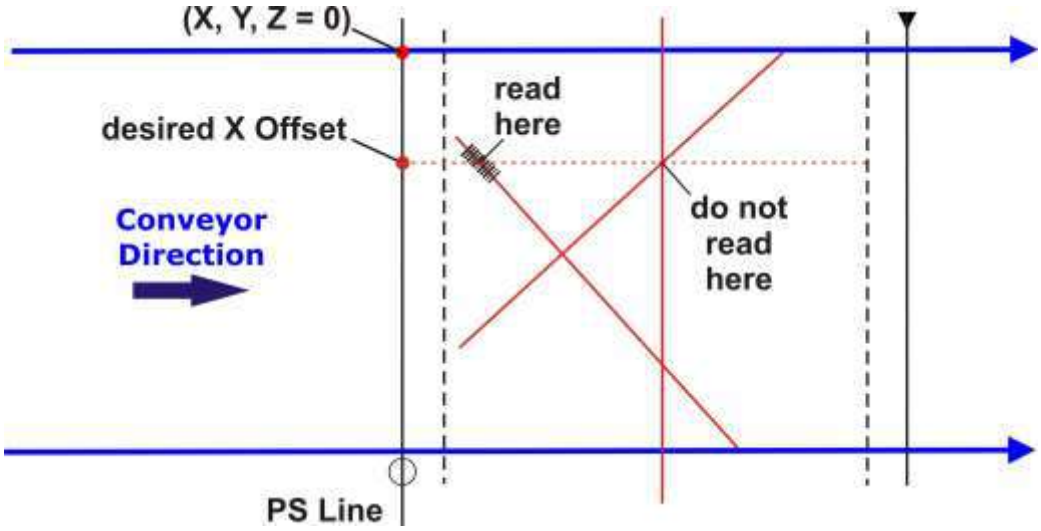

Figure 8 - X Offset Selection

Pressing the ▼ (down arrow) key at any point will terminate the procedure without saving the Absolute X position alignment.

NOTE	*Before resetting the Master scanner, if desired, you can download the Auto PackTrack Report file from the Master scanner RAM by connecting it to Genius™ and using the Tools>File transfer… menu. See Help On-Line.*

8. Manually reset the Master scanner.

1.8 ACCESSORIES

The following accessories are available on request for DS6400:

Name	Description	Part Number
Power Supplies		
PG6002	Single unit power supply (US)	93ACC1718
PG6001	Single unit power supply (UK)	93ACC1719
PG6000	Single unit power supply (EU)	93ACC1720
PWR-120	J-box power unit 110/230 VAC 24 V 120 W	93ACC1530
PWR-240	J-box power unit 110/230 VAC 24 V 240 W	93ACC1070
PWR-480A	J-box power unit 110/230 VAC 24 V 480 W	93ACC1850
Cables and Terminators		
BT-6000	Bus terminator	93A051299
CAB-6101	9-pin scanner/scanner connection cable 1 m	93A051220
CAB-6102	9-pin scanner/scanner connection cable 2 m	93A051230
CAB-6105	9-pin scanner/scanner connection cable 5 m	93A051240
CAB-6112	9-pin scanner to scanner no power cable 2 m	93A051224
CAB-6115	9-pin scanner to scanner no power cable 5 m	93A051225
CAB-6305	25-pin power cable Fam 6k 5 m	93ACC1768
CAB-6310	25-pin power cable Fam 6k 10 m	93ACC1752
CAB-S01	STD cable to CBX 1 m (25-pin to 25-pin)	93A051351
CAB-S02	STD cable to CBX 2 m (25-pin to 25-pin)	93A051352
CAB-S05	STD cable to CBX 5 m (25-pin to 25-pin)	93A051353
CAB-S10	STD cable to CBX 10 m (25-pin to 25-pin)	93A051354
CAB-F01	6K-8K FBUS cable to CBX 1 m (26-pin to 25-pin)	93A051355
CAB-F02	6K-8K FBUS cable to CBX 2 m (26-pin to 25-pin)	93A051356
CAB-F05	6K-8K FBUS cable to CBX 5 m (26-pin to 25-pin)	93A051357
CAB-6502	Fam 6K-8K cross cable 2.5 m (9-pin to 17-pin)	93A051288
CAB-6505	Fam 6K-8K cross cable 5 m (9-pin to 17-pin)	93A051289
CAB-ETH-M01	M12-IP67 Ethernet Cable (1 m)	93A051346
CAB-ETH-M03	M12-IP67 Ethernet Cable (3 m)	93A051347
CAB-ETH-M05	M12-IP67 Ethernet Cable (5 m)	93A051348
CBL-1534-0.2	Ethernet Adapter Cable (M12 4-pin male to RJ45 female)	93A050057
Software Management		
Datalogic WebSentinel-005	Supervisor (up to 5 arrays)	93A101014
Datalogic WebSentinel-010	Supervisor (up to 10 arrays)	93A101015
Datalogic WebSentinel-020	Supervisor (up to 20 arrays)	93A101016
Datalogic WebSentinel-032	Supervisor (up to 32 arrays)	93A101017
Datalogic WebSentinel-064	Supervisor (up to 64 arrays)	93A101018
Datalogic WebSentinel-128	Supervisor (up to 128 arrays)	93A101019
Datalogic WebSentinel-256	Supervisor (up to 256 arrays)	93A101020

Name	Description	Part Number
Mirrors		
GFC-60	90° mirror	93A201100
GFC-600	90° mirror close distance	93A201102
*** Connection Boxes**		
CBX100	Compact Connection Box	93A301067
CBX500	Modular Connection Box	93A301068
CBX800	Gateway Connection Box	93A301077
BM100	Backup Module	93ACC1808
BA100	DIN Rail Adapters for CBX	93ACC1821
BA200	Bosch Adapters for CBX	93ACC1822
BA900	Two Cable Glands Panel	93ACC1847
Sensors		
MEP-593	Photocell kit – PNP (PH-1)	93ACC1791
MEP-543	Photocell kit – NPN	93ACC1728
OEK-2	Optical encoder kit (10 m cable + spring)	93ACC1770
OEK-1	Optical encoder kit + 10 m cable	93ACC1600
Brackets		
FBK-6000	Fast bracket kit (2 pcs)	93ACC1721
US-60	mounting bracket kit (5 pcs) for multisided stations	890001020

* DS6400 application software does not support any of the CBX500 Host Interface Module accessories nor the BM150 Display accessory. Use the CBX800 Gateway for Host Interface Applications, (Fieldbus and non Fieldbus).

2 INSTALLATION

To install the system follow the given procedure:

1. Select the mounting location for DS6400;
2. Mount the DS6400 scanner;
3. Position the scanner with respect to the barcode;
4. Proceed with system electrical connection;
5. Install the Genius™ program on the PC and configure the scanner.
6. Set the Flash™ dynamic focus by means of the Genius™ software tool.

WARNING	*When installing several scanners, take care to position them correctly so that no laser beam enters the reading window perpendicularly and at the same level of the output beam of the other scanners. This condition could occur more frequently for side mounted applications. If these precautions are not followed, it may occur that the laser of the blinded scanner starts blinking due to an internal circuit which temporarily turns the laser off when detecting a power anomaly. To resolve this problem, it is sufficient to slightly change the inclination and position of one of the two scanners involved.*

NOTE	*Refer to the Reference Documentation for details on connecting your DS6400 reader to other devices in the system (i.e. CBX100 etc.).*

2.1 PACKAGE CONTENTS

Verify that the DS6400 reader and all the parts supplied with the equipment are present and intact when opening the packaging; the list of parts includes:

- DS6400 reader
- Installation Quick Reference + barcode test chart
- DS6400 configuration CD-ROM
- Mounting bracket and screws

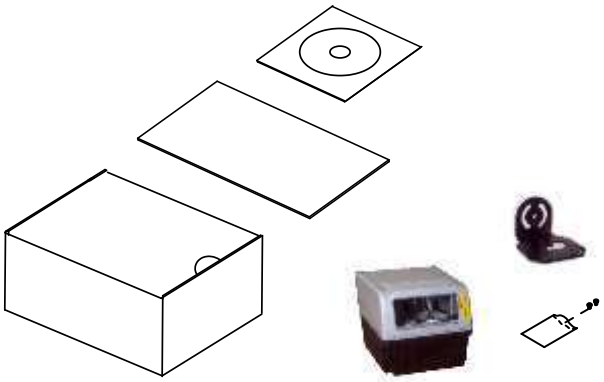

Figure 9 - DS6400 Package Contents

2.2 MECHANICAL MOUNTING

2.2.1 Mounting the Scanner

The DS6400 reader can be positioned and installed in the best way possible as a result of the patented Step-a-Head™ feature. Thanks to the separation between Head and Base, you can modify the orientation of the decoder base, and therefore display-keypad and connector panels, while keeping the optic head in the correct reading position. The reading head and the decoder base can be rotated independently from each other allowing the installation even in the most critical locations.

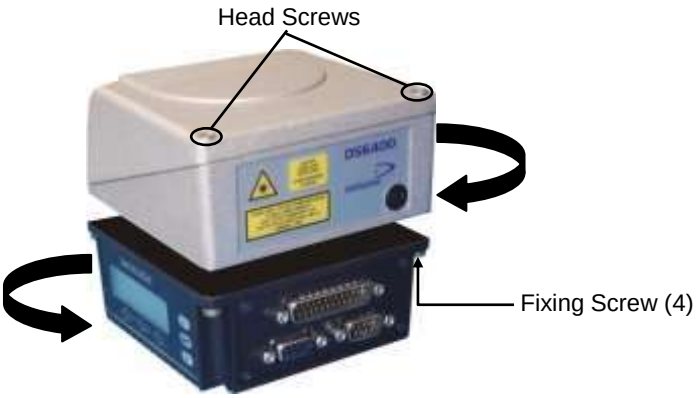

Figure 10 - Step-A-Head™ Feature

To rotate the head follow the given procedure:

1. detach the head from the base by unscrewing the four fixing screws;
2. rotate the head in the desired position;
3. loosen but don't remove the two screws on top of the head;
4. affix the head onto the base carefully aligning the four fixing screws and progressively tightening them about half-way;
5. completely tighten the two screws on top of the head;
6. completely tighten the four fixing screws.

The following diagrams give the overall dimensions of the reader standard model, oscillating mirror model and mounting brackets. They may be used for their installation.

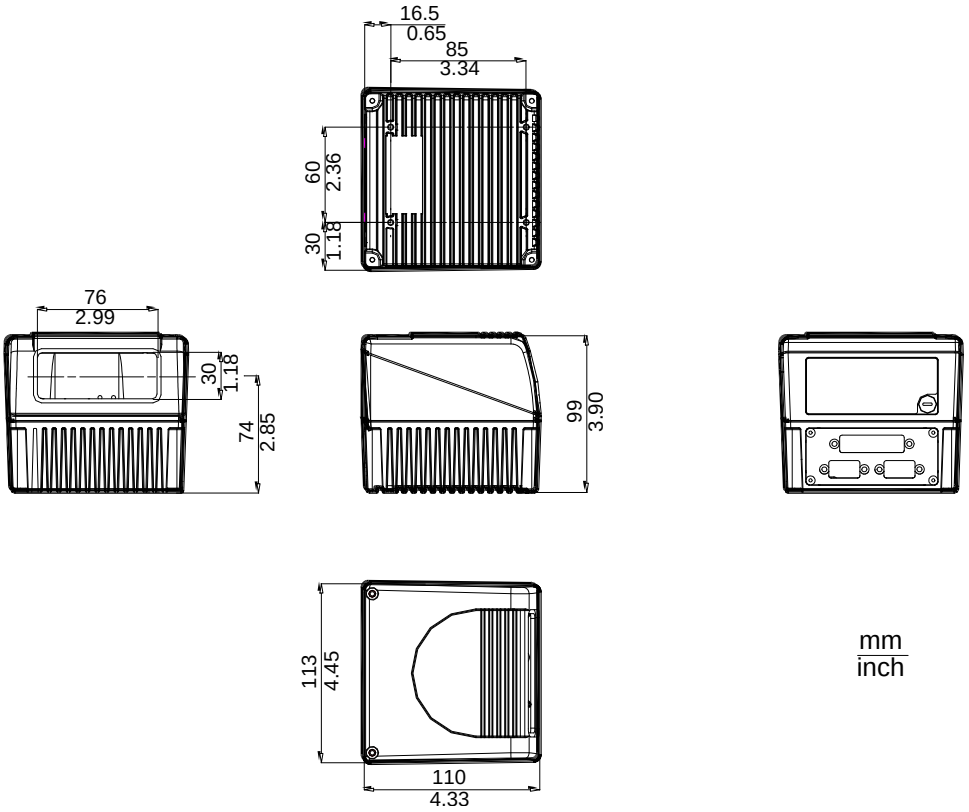

Figure 11 - DS6400 Overall Dimensions

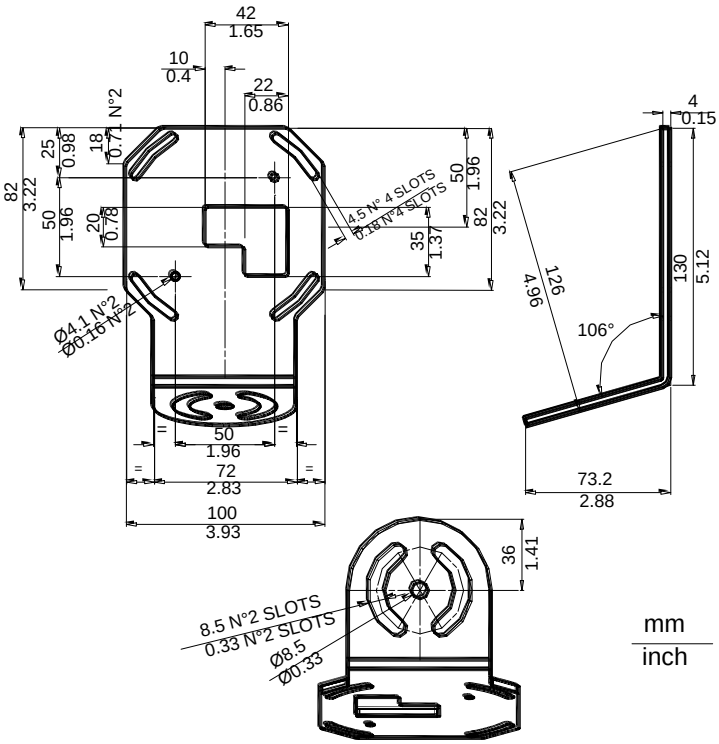

Figure 12 – ST-237 Mounting Bracket Overall Dimensions

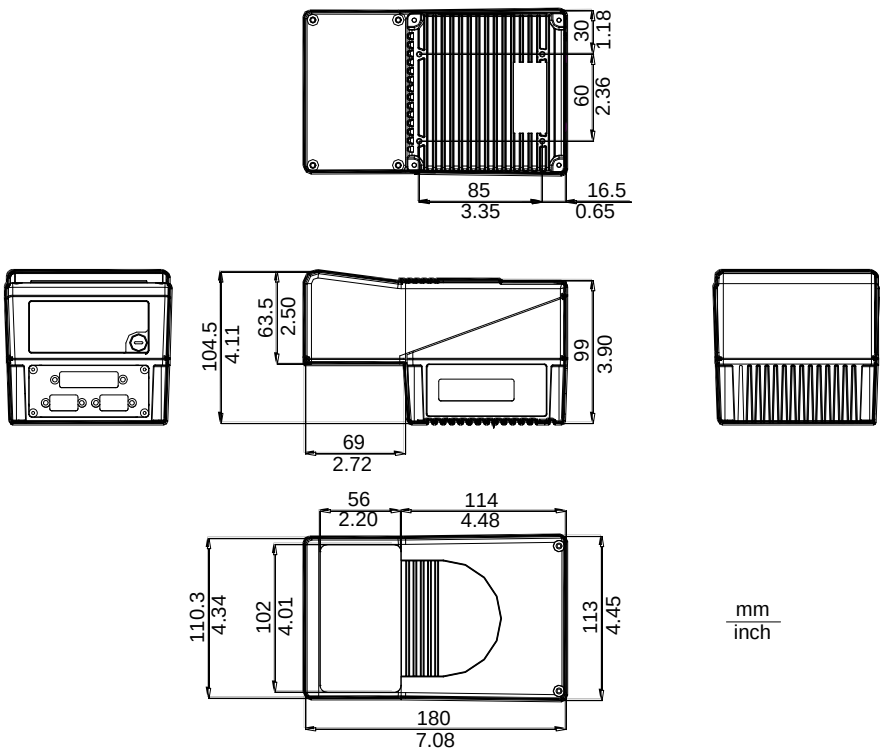

Figure 13 - DS6400 Oscillating Mirror Model Overall Dimensions

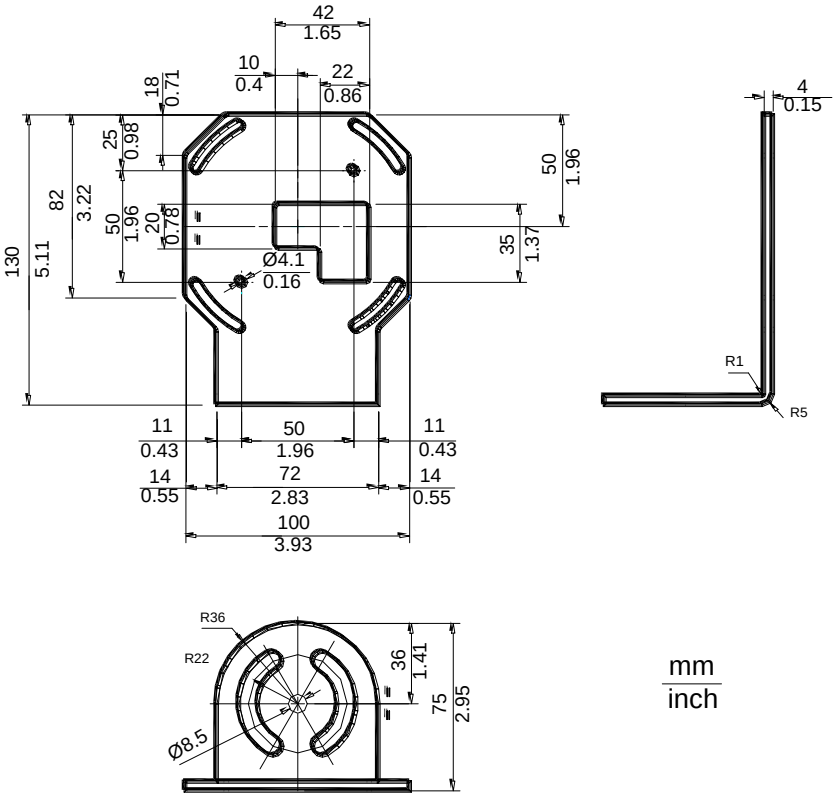

Figure 14 – ST-210 Mounting Bracket Overall Dimensions

2.2.2 Mounting the Scanner with Accessories

The following accessories allow installing the DS6400 reader in the most suitable position for your network layout:

- ST-237 mounting bracket;
- ST-210 mounting bracket;
- FBK-6000 fast bracket.

The ST-237 is a 106° mounting bracket to be mounted on the reader as displayed in the image below:

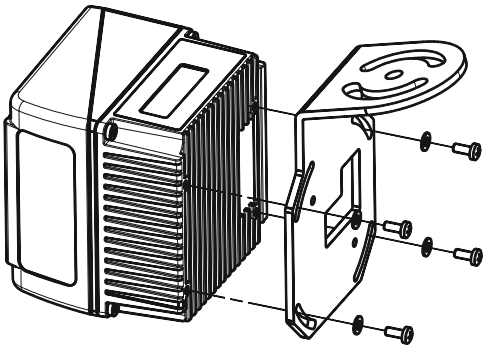

Figure 15 – Mounting the ST-237 Mounting Bracket

The ST-210 is a 90° mounting bracket to be mounted on the reader as displayed in the image below:

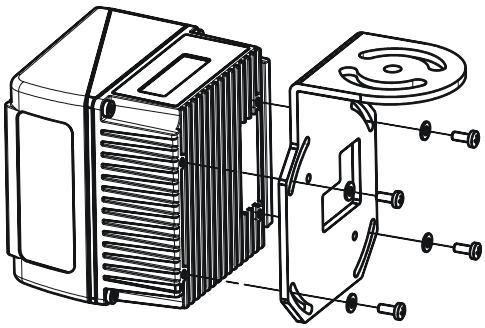

Figure 16 – Mounting the ST-210 Mounting Bracket

The FBK-6000 is a fast bracket kit allowing a quick and easy mounting of the scanner on the ST-237 bracket.

First, it is necessary to fix the FBK-6000 to the DS6400 scanner by means of the mounting screws:

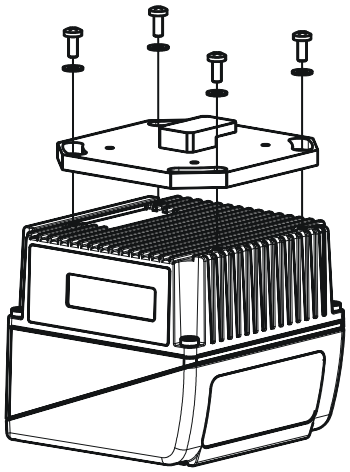

Figure 17 – Mounting the FBK-6000 on the Scanner

Then, attach the assembly to the mounting bracket by slipping the hook into the bracket hole. Finally, fix it by means of the 2 fixing screws:

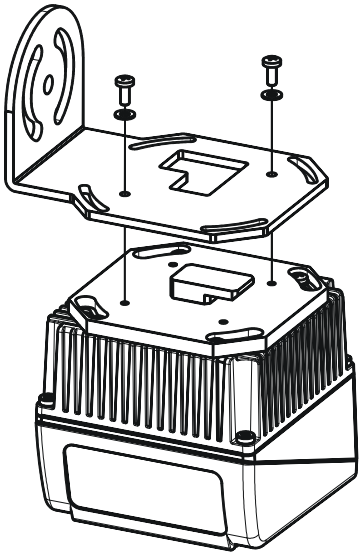

Figure 18 – Mounting the Assembly on the Bracket

2.3 POSITIONING THE SCANNER

The DS6400 reader is able to decode moving barcode labels at a variety of angles, however significant angular distortion may degrade reading performance.

When mounting DS6400 take into consideration these three ideal label position angles: **Pitch 0°**, **Skew 10° to 30°** and **Tilt 0°**.

Follow the suggestions for the best orientation:

The **Pitch** angle is represented by the value **P** in Figure 19. Position the reader in order to minimize the Pitch angle.

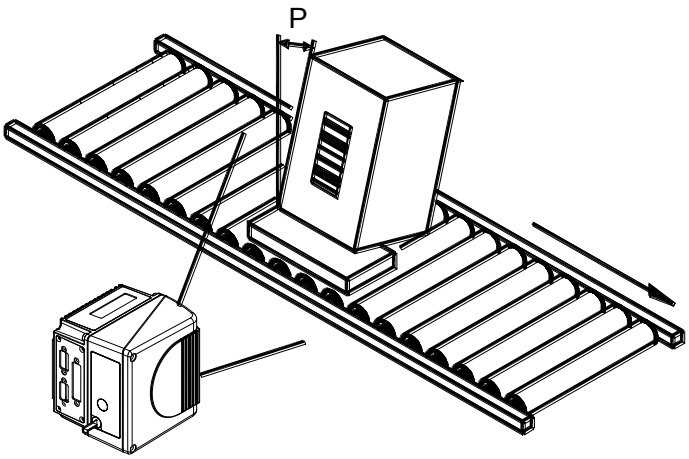

Figure 19 - "Pitch" Angle

The **Skew** angle is represented by the value **S** in Figure 20. Position the reader to **assure at least 10°** for the **Skew** angle. This avoids the direct reflection of the laser light emitted by the scanner.
For oscillating mirror models, this angle refers to the most inclined or external laser line, so that all other laser lines assure more than 10° Skew.

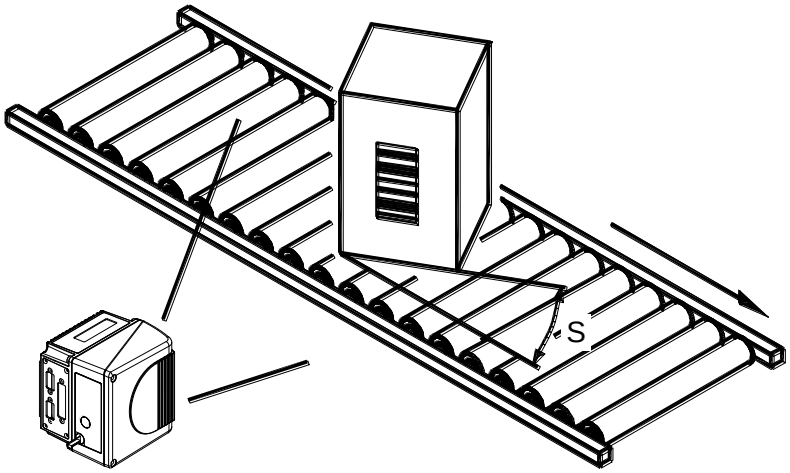

Figure 20 - "Skew" Angle

The **Tilt** angle is represented by the value **T** in Figure 21.

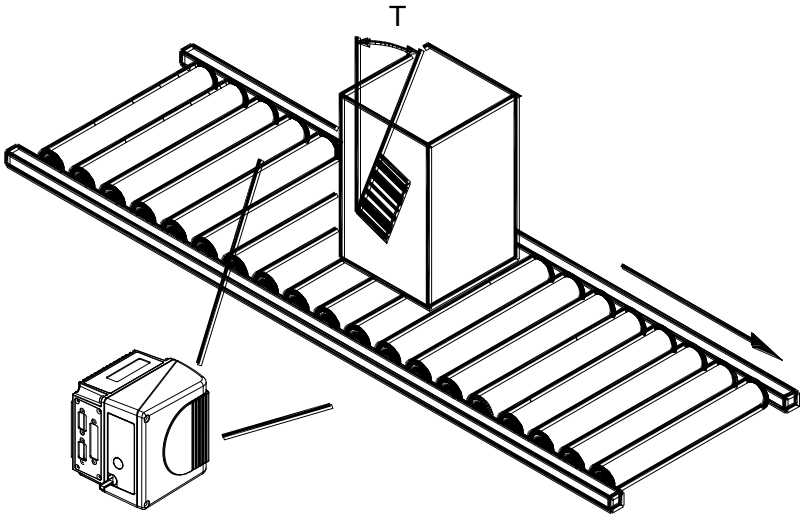

Figure 21 - "Tilt" Angle

2.3.1 16° Skew Positioning

The DS6400 scanner is mounted on the ST-237 106° mounting bracket (see Figure 12) which guarantees a built-in Skew angle (**S** in the figure below) of 16° with respect to the frame plane (typically the Skew angle should be between 10° - 20°). This avoids the direct reflection of the laser light emitted by the scanner. Furthermore, the bracket guides allow adjusting the Tilt angle (**T** in the figure below, which is typically 0°) for the best scanner orientation:

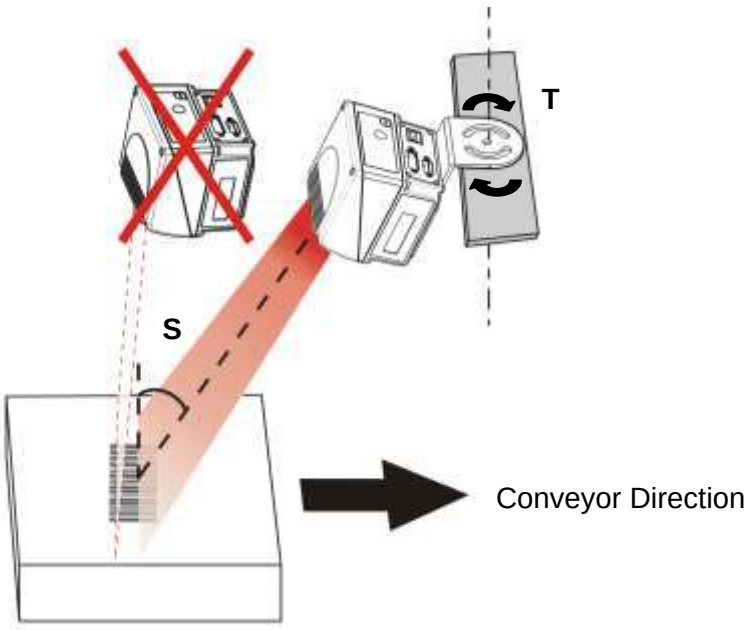

Figure 22 – 16° Skew Installation

2.3.2 45° Skew Positioning

The DS6400 scanner is mounted on the ST-210 90° mounting bracket (see Figure 14). By adjusting the mounting bracket guides, reach 45° for the Skew angle (**S** in the figure below) to avoid the direct reflection of the laser light emitted by the scanner:

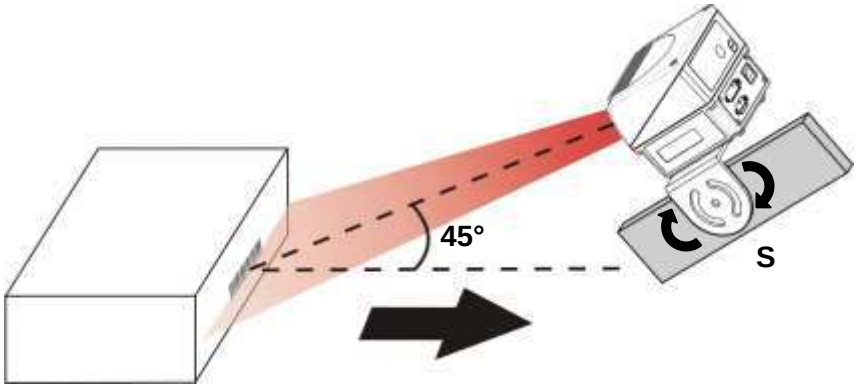

Figure 23 – 45° Skew Installation

CAUTION

If using the 45° Skew installation, the scanner reading performance is not guaranteed to match that measured for the standard installation with Skew angle between 10° - 20° (see reading diagrams in par. 9.5).

NOTE

The ST-210 mounting bracket is an accessory of the DS6300 standard model available in the US-60 kit (890001020).

3 CBX ELECTRICAL CONNECTIONS

Each scanner model has the following connectors:

Scanner Model	Connectors
Master/Slave	25-pin male serial interface and I/O connector 9-pin male Lonworks connector ***(see caution below)*** 9-pin female Lonworks connector
Ethernet	26-pin male serial interface and I/O connector 9-pin female Lonworks connector M12 4-pin D-coded connector for Ethernet *
DeviceNet	26-pin male serial interface and I/O connector 9-pin female Lonworks connector 5-pin male connector
Profibus	26-pin male serial interface and I/O connector 9-pin female Lonworks connector 9-pin female Profibus connector

* older models have RJ45 modular connector for Ethernet

CAUTION

Do not connect an RS232 port to the 9-pin Lonworks Connector. This may damage your Laptop PC.

DS6400 Master/Slave models can connect their 25-pin male D-sub connector for connection to the power supply, serial interface and input/output signals to a CBX connection box by using the dedicated cables (**CAB-Sxx**).

DS6400 Fieldbus models can connect their 26-pin male D-sub connector for connection to the power supply, serial interface and input/output signals to a CBX connection box by using the dedicated cables (**CAB-F0x**).

We recommend making system connections through one of the CBX connection boxes since they offer the advantages of easy connection, easy device replacement, filtered reference signals and Backup and Restore features with the accessory BM100 module.

NOTE

If you require direct wiring to the scanner the details of the connector pins and relative connections are indicated in Chaper 4.

For Lonworks network connections see chapters 5 and 7.

For Fieldbus connections see chapters 6 and 7.

For ID-NET™ Fixed Baudrate connections see the Application Note on the CD-ROM.

The table below gives the pinout of the CBX100/500 terminal block connectors. Use this pinout when the DS6400 reader is connected by means of the CBX100/500:

CBX100/500 Terminal Block Connectors				
Group	**Name**	**Function**		
Input Power	Vdc	Power Supply Input Voltage +		
	GND	Power Supply Input Voltage -		
	Earth	Protection Earth Ground		
External Trigger (PS) Input	+V	Power Source – External Trigger		
	I1A	External Trigger A (polarity insensitive) for PS		
	I1B	External Trigger B (polarity insensitive) for PS		
	-V	Power Reference – External Trigger		
Encoder or Generic Input	+V	Power Source – Inputs		
	I2A	Input 2A (polarity insensitive) for Encoder		
	I2B	Input 2B (polarity insensitive) for Encoder		
	-V	Power Reference – Inputs		
Outputs	+V	Power Source – Outputs		
	-V	Power Reference – Outputs		
	O1+	Output 1+		
	O1-	Output 1-		
	O2+	Output 2+		
	O2-	Output 2-		
Other I/O (CBX500 only)	O3A	Output 3A (polarity insensitive)		
	O3B	Output 3B (polarity insensitive)		
	+V	Power Source – Other I/O		
	I3A	Input 3A (polarity insensitive)		
	I4A	Input 4A (polarity insensitive)		
	-V	Power Reference – Other I/O		
	I34B	Input 3B and 4B (common) (polarity insensitive)		
	I34B	Input 3B and 4B (common) (polarity insensitive)		
Auxiliary Interface	TX	Auxiliary Interface TX		
	RX	Auxiliary Interface RX		
	SGND	Auxiliary Interface Reference		
ID-NET™	REF	Reserved		
	ID+	Reserved		
	ID-	Reserved		
Network	Shield	Network Cable Shield		
		RS232	**RS485FD**	**RS485HD**
Main Interface		TX	TX+	RTX+
		RTS	TX-	RTX-
		RX	*RX+	
		CTS	*RX-	
		SGND	SGND	SGND

***** Do not leave floating, see par. 3.2.2 for connection details.

CAUTION

Do not connect GND and SGND to different (external) ground references. GND and SGND are internally connected through filtering circuitry which can be permanently damaged if subjected to voltage drops over 0.8 Vdc.

CAUTION

DS6400 scanners do not support Host Interface Modules with the CBX500. Use the CBX800 Gateway for Host Interface Applications, (Fieldbus and non Fieldbus).

NOTE

To avoid electromagnetic interference when the scanner is connected to a CBX connection box, verify the jumper positions in the CBX as indicated in its Installation Manual.

3.1 POWER SUPPLY

Power can be supplied to the scanner through the CBX100/500 spring clamp terminal pins as shown in Figure 24:

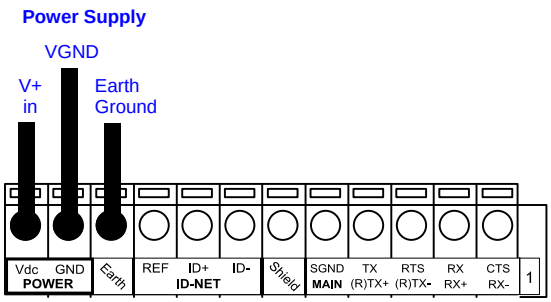

Figure 24 - Power Supply Connections

The power must be between 15 and 30 Vdc only. The max. power consumption is 24 W including startup current.

Datalogic strongly recommends a minimum 24 Vdc supply voltage when using a master/slave configuration. Several accessory power supplies are available to power the DS6400 and reading station components. See par. 1.8.

A security system allows the laser to activate only once the motor has reached the correct rotational speed; consequently, the laser beam is generated after a slight delay from the power on of the scanner.

DS6400 scanners have power ground GND (25/26-pin connector pin 23, 25, 26) as well as the cable Shield (25/26-pin connector pin 1) internally connected to the chassis. It is recommended to connect the device chassis to earth ground (Earth) by setting the appropriate jumper in the CBX connection box. See the CBX Installation Manual for details.

3.2 MAIN SERIAL INTERFACE

The main serial interface is compatible with the following electrical standards and the relative signals are available on the CBX spring clamp terminal blocks:

RS232

RS485 full-duplex

RS485 half-duplex

The main interface type and the relative parameters (baud rate, data bits, etc.) can be set using the Genius™ utility program or the Genius™ based Host Mode Programming procedure. For more details refer to the section "Main Serial Port" in the Genius™ Help On Line.

3.2.1 RS232 Interface

The main serial interface is used in this case for point-to-point connections; it handles communication with the host computer and allows both transmission of code data and the programming of the scanner. This is the default setting.

The following pins are used for RS232 interface connection:

CBX100/500	Function
TX	Transmit Data
RX	Receive Data
RTS	Request To Send
CTS	Clear To Send
SGND	Signal Ground

It is always advisable to use shielded cables. If the shield is tied to ground at the Host, then leave it floating at the CBX. If it is floating at the Host then tie it to Shield at the CBX. The overall maximum cable length must be less than 15 m (50 ft).

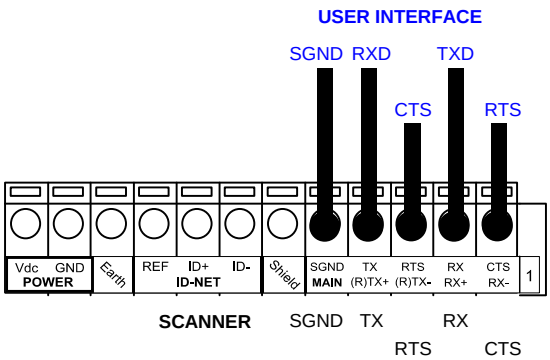

Figure 25 – RS232 Main Interface Connections Using Hardware Handshaking

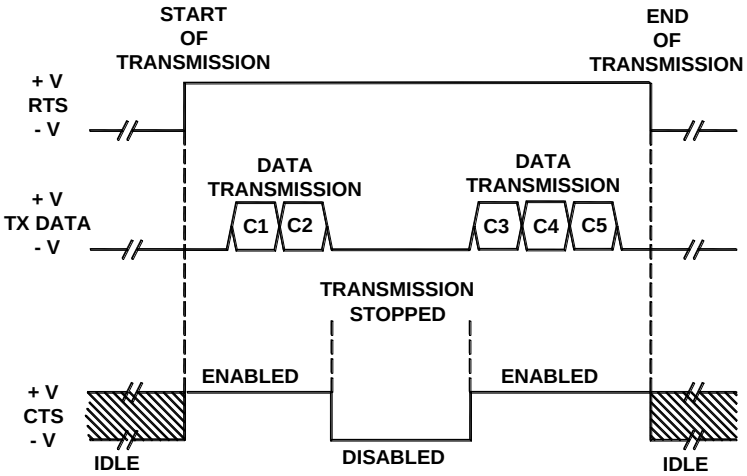

Figure 26 - RS232 Control Signals

The RTS and CTS signals control data transmission and synchronize the connected devices.

If the RTS/CTS handshaking protocol is enabled, the DS6400 activates the RTS output to indicate a message is to be transmitted. The receiving unit activates the CTS input to enable the transmission.

3.2.2 RS485 Full-Duplex Interface

The RS485 full-duplex (5 wires + shield) interface is used for non-polled communication protocols in point-to-point connections over longer distances (max 1200 m / 3940 ft) than those acceptable for RS232 communications or in electrically noisy environments.

If the shield is tied to ground at the Host, then leave it floating at the CBX. If it is floating at the Host then tie it to Shield at the CBX.

The CBX pinout follows:

CBX100/500	Function
TX+	RS485 Transmit Data +
RX+	RS485 Receive Data +
TX-	RS485 Transmit Data -
RX-	RS485 Receive Data -
SGND	Signal Ground

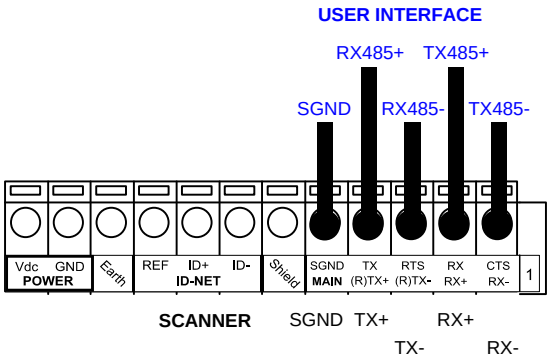

Figure 27 - RS485 Full-duplex Connections

NOTE

For applications that do not use RX485 signals, do not leave these lines floating but connect them to SGND as shown below.

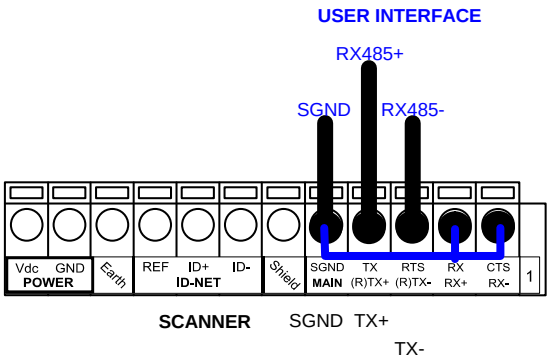

Figure 28 - RS485 Full-duplex Connections using Only TX Signals

3.2.3 RS485 Half-Duplex Interface

NOTE

This interface is provided for backward compatibility. We recommend using the more efficient Lonworks network for Master/Slave or Multiplexer layouts.

The RS485 half-duplex (3 wires + shield) interface is used for polled communication protocols.

It can be used for Multidrop connections with a Datalogic Multiplexer, (see par. "Multiplexer" in Appendix A) exploiting a proprietary protocol based on polled mode called MUX32 protocol, where a master device polls slave devices to collect data. The overall maximum cable length should not exceed 1200 m (3940 ft).

If the shield is tied to ground at the Host, then leave it floating at the CBX. If it is floating at the Host then tie it to Shield at the CBX.

CBX100/500	Function
RTX+	RS485 Receive/Transmit Data +
RTX-	RS485 Receive/Transmit Data -
SGND	Signal Ground

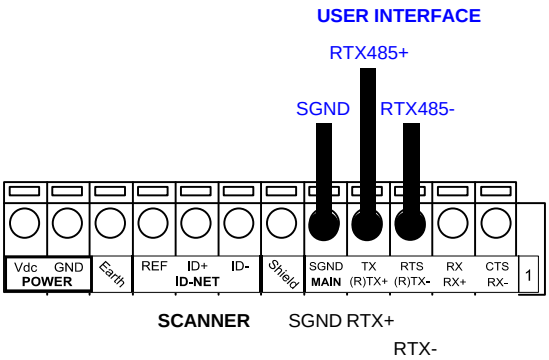

Figure 29 - RS485 Half-duplex Connections

This interface is forced by software when the protocol selected is MUX32 protocol.

In a Multiplexer layout, the Multidrop address must also be set via serial channel by the Genius™ utility or by the Host Programming Mode.

Figure 30 shows a multidrop configuration with DS6400 scanners connected to a Multiplexer.

CAUTION

This is an example of multidrop wiring. Consult the multiplexer manual for complete wiring instructions.

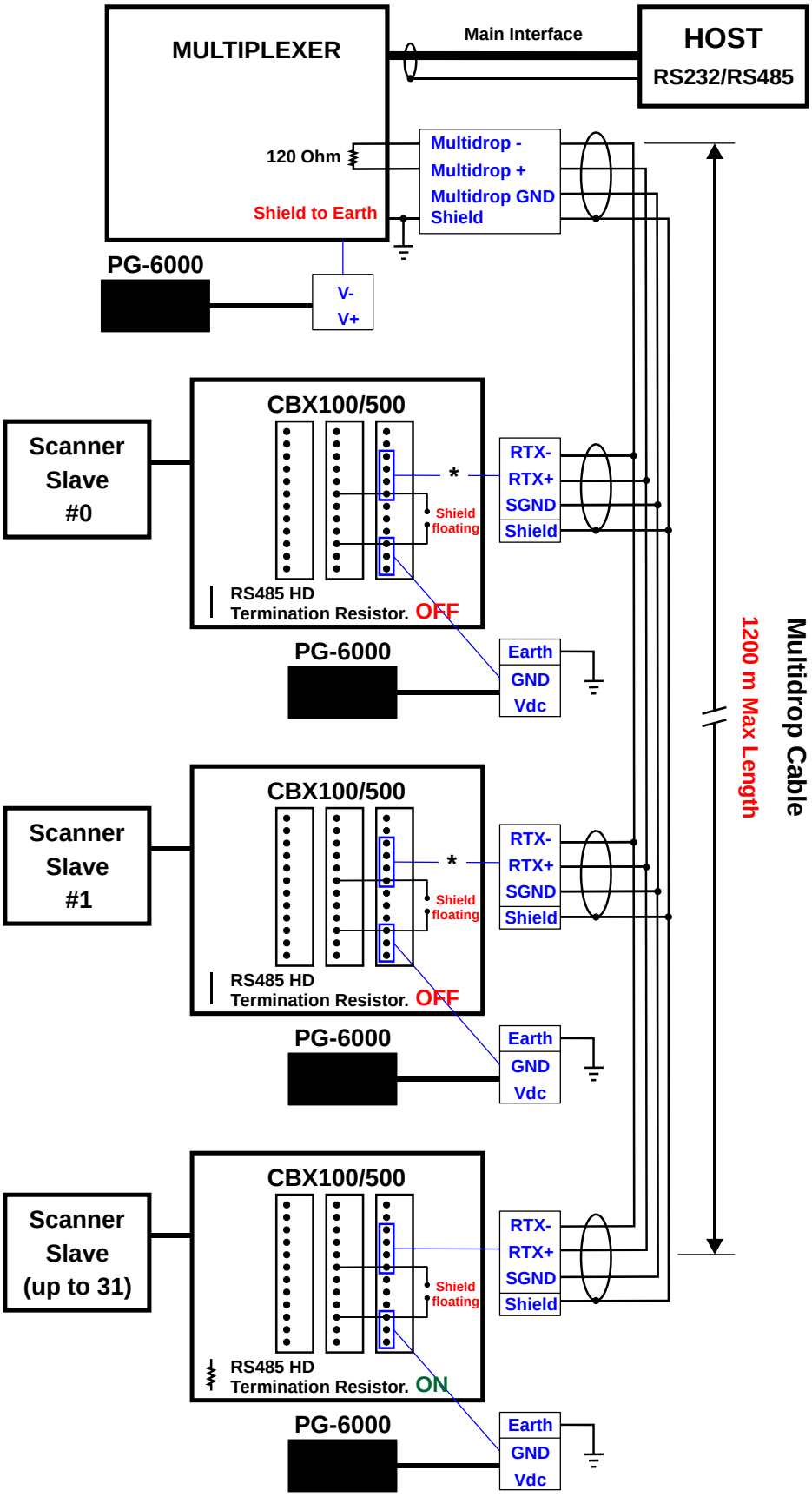

Figure 30 - DS6400 Multidrop Connection to a Multiplexer

***** When using CBX500, the **Main** interface multidrop network signals: **Shield**, **SGND**, **RTX+**and **RTX-** are repeated on terminal connector row 4 to facilitate system cabling.

3.3 AUXILIARY RS232 INTERFACE

The auxiliary serial interface is used exclusively for RS232 point-to-point connections. It is principally used for scanner configuration from a laptop PC but is also available for LOCAL ECHO to a monitoring PC or for Pass through layouts. This interface is active when the Data Tx parameter is enabled.

The parameters relative to the aux interface (baud rate, data bits, etc.) can be defined using the Genius™ utility program or Genius™ based Host Mode Programming installed from the CD-ROM.

The 9-pin female Auxiliary Interface connector inside the CBX is the preferred connector for device configuration or temporary communication monitoring.

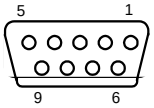

Figure 31 - 9-pin female connector

If permanent system wiring is required, the following pins are used to connect the RS232 auxiliary interface. The overall maximum cable length should not exceed 15 m (50 ft). In this case it is advisable to use shielded cables. If the shield is tied to ground at the Host, then leave it floating at the CBX. If it is floating at the Host then tie it to Shield at the CBX.

CBX100/500	Function
RX	Auxiliary Interface Receive Data
TX	Auxiliary Interface Transmit Data
SGND	Auxiliary Interface Reference

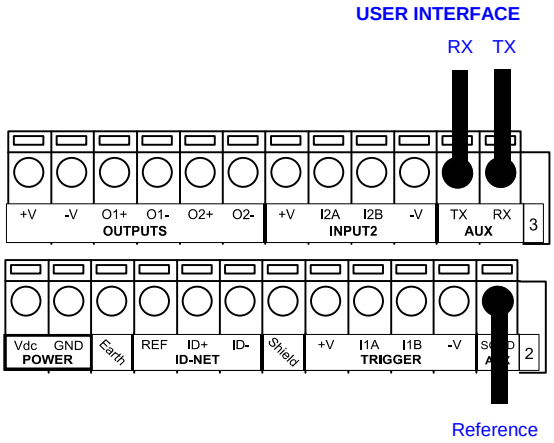

Figure 32 - RS232 Auxiliary Interface Connections

NOTE

Do not connect the Aux Interface to the CBX spring clamp connectors and the 9-pin connector simultaneously.

3.4 INPUTS

There are four optocoupled polarity insensitive inputs available on the scanner: Input 1 (External Trigger/PS), Input 2 (Encoder), Input 3 and 4 generic inputs.

The electrical features of the inputs are:

Maximum voltage:	30 Vdc
Maximum current Input 1 and 2:	12 mA (scanner) + 12 mA (CBX)
Maximum current Input 3 and 4:	12 mA (scanner)

CBX100/500	Function
+V	Power Source - External Trigger
I1A	External Trigger A (polarity insensitive) for PS
I1B	External Trigger B (polarity insensitive) for PS
I2A	Input 2 A (polarity insensitive) for Encoder
I2B	Input 2 B (polarity insensitive) for Encoder
I3A (CBX500 only)	Input 3 A (polarity insensitive)
I4A (CBX500 only)	Input 4 A (polarity insensitive)
I34B (CBX500 only)	Common Reference for Inputs 3 and 4 (polarity insensitive)
-V	Power Reference - External Trigger

The active state of all the inputs is selected in software (open or closed). Refer to the Genius™ Help On Line.

All inputs are optocoupled, polarity insensitive, and driven by a constant current generator; the command signal is filtered through an anti-disturbance circuit which generates a debouncing delay which can be set to 5 ms or 500 μs. In particular, I1 for PS, I3 and I4 share the same value which usually corresponds to 5 ms when using a photoelectric sensor, while I2 is set to 500 μs when this input is used for the Encoder. The maximum Encoder frequency is **2 kHz**.

Input 1 (External Trigger/PS) is used in the On-Line and PackTrack™ operating Modes and tells the scanner to scan for a code. The yellow Phase On LED (Figure C, 3) which refers to Input 1 is on only when current flows through the input circuit and therefore when the active state of this input is set to "active open", the LED lights up when the input corresponds to OFF.

Input 2 is normally used for the Encoder input. In PackTrack™ mode, it detects the conveyor speed.

Inputs 3 and 4 can be used as the stop signal for the reading phase.

The debouncing delay value can be changed through the software parameter *Debouncing for Input x*, see the "6-8 K Software Configuration Parameter Guide" or Help file.

Powering Inputs

Input devices can be supplied by either scanner power (V+ and V-) or external power supplies (Vext).

Electrical isolation between the input command logic and the scanner is maintained when powering the input devices from an external supply voltage (Vext).

The driving logic of the input signals may be powered, for convenience, with the voltage supply at the CBX terminal block spring clamps (V+) and (V-). In this case, however, the device is no longer electrically isolated. The voltage available on pins V+ and V-, is physically the same as the input power for the scanner (Vdc and GND).

INPUT 1 (EXTERNAL TRIGGER/PS) CONNECTIONS USING DS6400 POWER

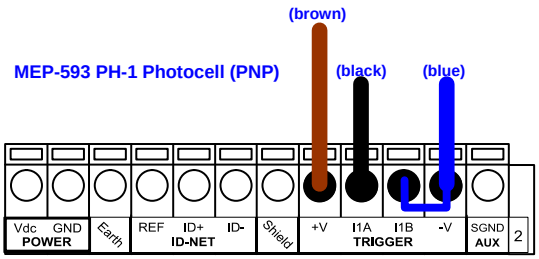

Figure 33 – MEP-593 PH-1 (PNP) External Trigger/PS Using DS6400 Power

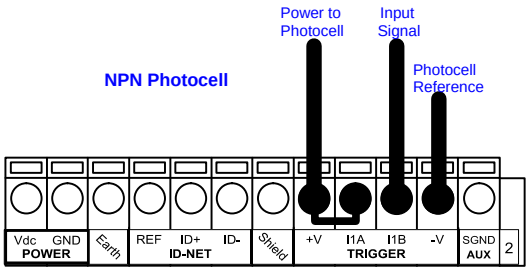

Figure 34 - NPN External Trigger/PS Using DS6400 Power

INPUT 1 (EXTERNAL TRIGGER/PS) CONNECTIONS USING EXTERNAL POWER

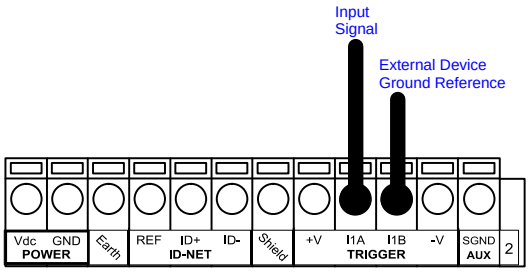

Figure 35 - PNP External Trigger/PS Using External Power (i.e. PLC signal)

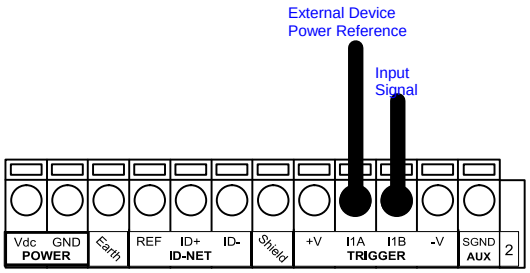

Figure 36 - NPN External Trigger/PS Using External Power (i.e. PLC signal)

INPUT 2 (ENCODER) CONNECTIONS USING DS6400 POWER

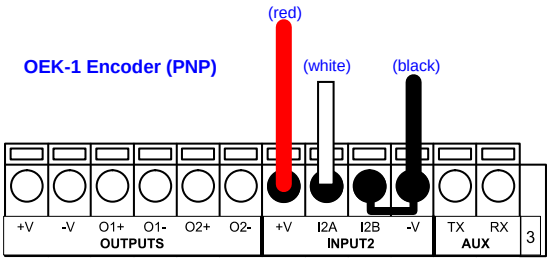

Figure 37 - OEK-1 Encoder PNP Using DS6400 Power

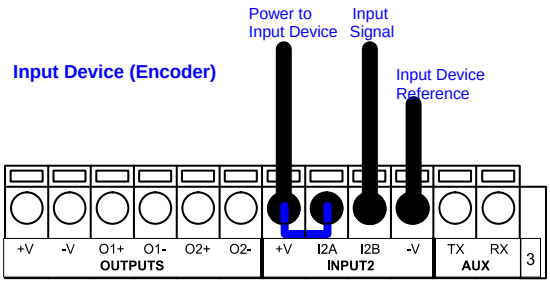

Figure 38 - Encoder NPN Using DS6400 Power

INPUT 2 (ENCODER) CONNECTIONS USING EXTERNAL POWER

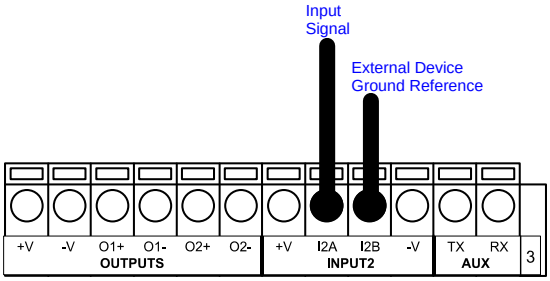

Figure 39 - PNP Encoder Using External Power (i.e. PLC signal)

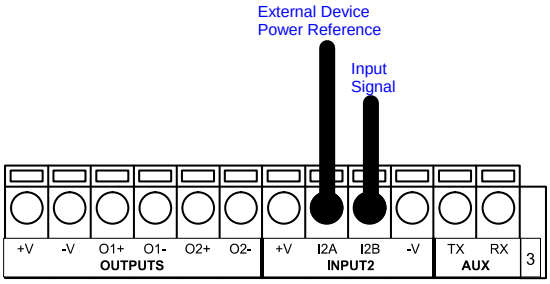

Figure 40 - NPN Encoder Using External Power (i.e. PLC signal)

NOTE

*Terminal pins **I34B** are common to both inputs 3 and 4 and therefore these inputs cannot be driven by opposite polarity devices.*

INPUT 3 - 4 CONNECTIONS USING DS6400 POWER (CBX500 Only)

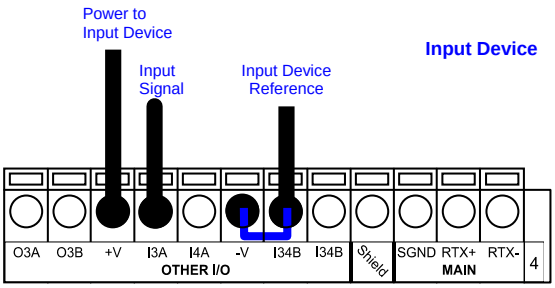

Figure 41 - PNP Input 3 - 4 Using DS6400 Power

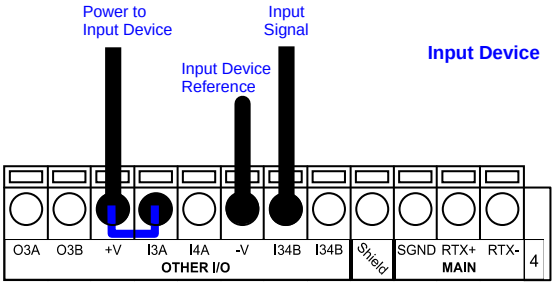

Figure 42 - NPN Input 3 - 4 Using DS6400 Power

INPUT 3 - 4 CONNECTIONS USING EXTERNAL POWER (CBX500 Only)

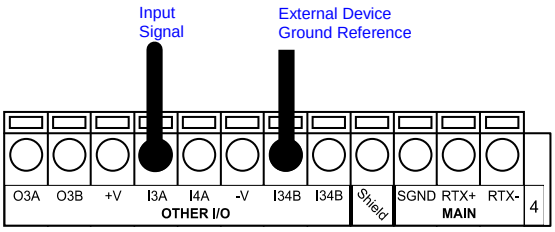

Figure 43 - PNP Input 3 - 4 Using External Power (i.e. PLC signal)

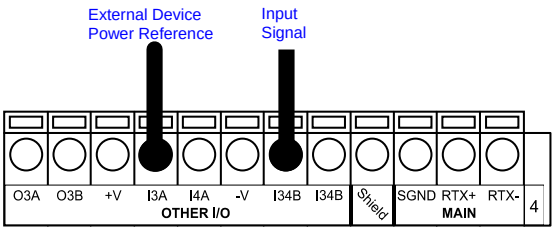

Figure 44 - NPN Input 3 - 4 Using External Power (i.e. PLC signal)

3.4.1 Code Verifier

If the DS6400 is used as a Code Verifier, the verifier code can be configured in software through the Genius™ configuration program. However it is also possible to use one of the inputs to trigger when the scanner should store a code read as the verifier code.

The Code Verifier parameter must be enabled, and the configuration parameters to allow correct Code Type reading must be saved to the scanner in order to read the verifier code.

When the selected input is activated, the next read code will be stored as the verifier code in the scanner's non-volatile (Flash) memory.

For more details see the Verifier Parameters in the "6-8 K Software Configuration Parameter Guide" or Help file.

3.5 OUTPUTS

Three general purpose outputs are available. The electrical features are given below:

Outputs 1 and 2	
Maximum Voltage	30 V
Collector Current (pulse)	130 mA Max.
Collector Current (continuous)	40 mA Max.
Saturation Voltage (VCE)	1 V at 10 mA Max.
Maximum Power Dissipation	90 mW at 50°C (Ambient temperature)

Output 3 has different electrical features. It is a bi-directional solid state relay with built-in current limit protection.

Output 3	
Maximum Voltage	± 100 V (**Vext only**)
Collector Current (pulse)	300 mA Max. at 25°C (Ambient temperature) 240 mA Max. at 50°C (Ambient temperature)
Collector Current (continuous)	200 mA Max. at 25°C (Ambient temperature) 150 mA Max. at 50°C (Ambient temperature)
R on R off	6 – 15 Ω > 500 Ω
Off-State Leakage Current	< 1 µA
Maximum Power Dissipation	550 mW at 50°C (Ambient temperature)

CBX100/500	**Function**
+V	Power Source - Outputs
O1+	Output 1 +
O1-	Output 1 -
O2+	Output 2 +
O2-	Output 2 -
O3A (CBX500 only)	Output 3 A (polarity insensitive)
O3B (CBX500 only)	Output 3 B (polarity insensitive)
-V	Power Reference Outputs

The function of each output can be defined by the user (No Read, Right, Wrong, etc.). Refer to the Genius™ Help On Line.

The output signals are fully programmable being determined by the configured Activation/Deactivation events, Deactivation Timeout or a combination of the two.

By default, Output 1 is associated with the Complete Read event, which activates when all the selected codes are correctly decoded, and Output 2 is associated with the No Read event, which activates when the code signaled by the external trigger/PS is not decoded.

Output 3 can be assigned to the same events and it has the advantage of being polarity insensitive. By default it is not assigned to any event. The CBX500 must be used to connect this output.

OUTPUT 1 and 2 CONNECTIONS USING DS6400 POWER

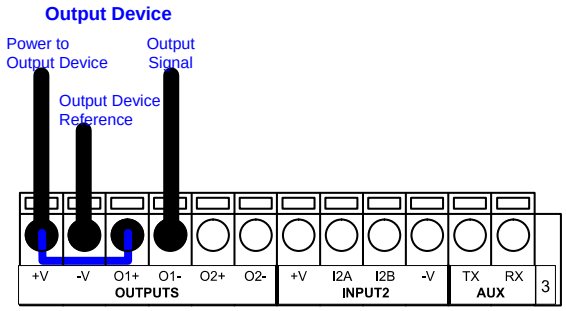

Figure 45 - Open Emitter Output Using DS6400 Power

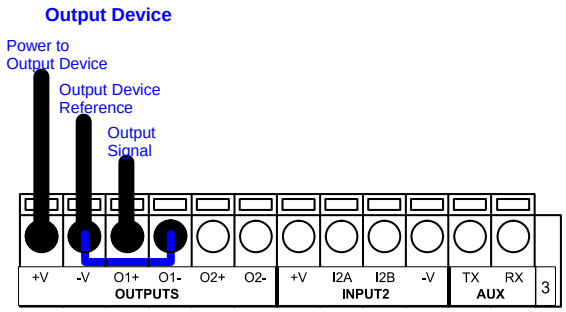

Figure 46 - Open Collector Output Using DS6400 Power

OUTPUT 1 and 2 CONNECTIONS USING EXTERNAL POWER

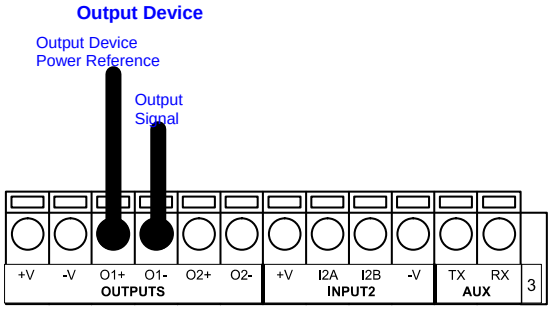

Figure 47 - Open Emitter Output Using External Power

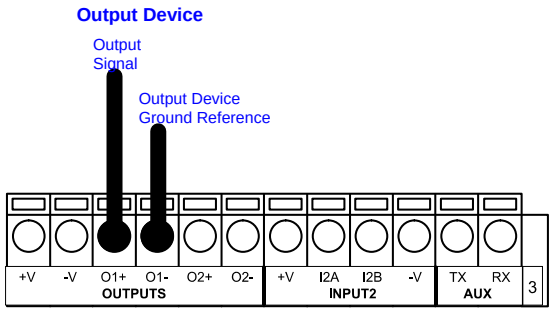

Figure 48 - Open Collector Output Using External Power

OUTPUT 3 CONNECTIONS USING DS6400 POWER (CBX500 Only)

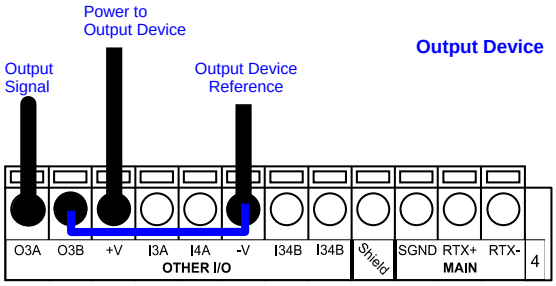

Figure 49 - Output 3 Using DS6400 Power

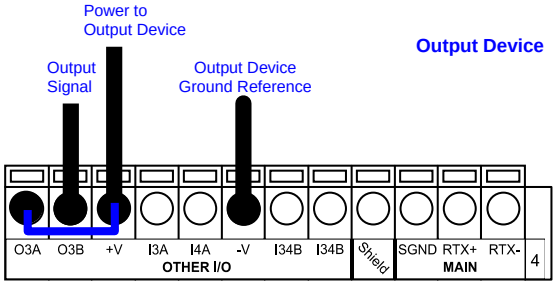

Figure 50 - Output 3 Using DS6400 Power

OUTPUT 3 CONNECTIONS USING EXTERNAL POWER (CBX500 Only)

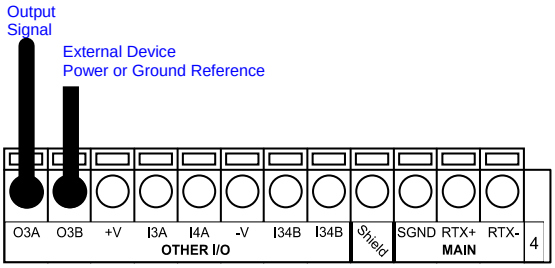

Figure 51 - Ouput 3 Using External Power

The command signals are filtered and generate a delay of about 50 µs for Output 1 and 2 and 1 ms for Output 3.

3.6 USER INTERFACE - HOST

The following table contains the pinout for standard RS232 PC Host interface. For other user interface types please refer to their own manual.

RS232 PC-side connections			
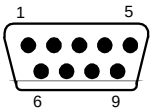 9-pin male connector		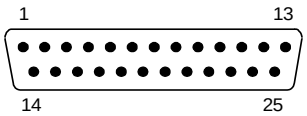 25-pin male connector	
Pin	**Name**	**Pin**	**Name**
2	RX	3	RX
3	TX	2	TX
5	GND	7	GND
7	RTS	4	RTS
8	CTS	5	CTS

4 CUSTOM CABLE ELECTRICAL CONNECTIONS

Each scanner model has the following connectors:

Scanner Model	Connectors
Master/Slave	25-pin male serial interface and I/O connector 9-pin male Lonworks connector *(**see caution below**)* 9-pin female Lonworks connector
Ethernet	26-pin male serial interface and I/O connector 9-pin female Lonworks connector M12 4-pin D-coded connector for Ethernet *
DeviceNet	26-pin male serial interface and I/O connector 9-pin female Lonworks connector 5-pin male connector
Profibus	26-pin male serial interface and I/O connector 9-pin female Lonworks connector 9-pin female Profibus connector

* older models have RJ45 modular connector for Ethernet

CAUTION

Do not connect an RS232 port to the 9-pin Lonworks Connector. This may damage your Laptop PC.

DS6400 scanners are equipped with a 25-pin male D-sub connector (Master/Slave models) or a 26-pin male D-sub connector (Fieldbus models) for connection to the host computer, power supply and input/output signals. These signals can be wired using a custom cable according to the application needs.

The paragraphs in this chapter detail the individual signal connections.

For Lonworks network connections see chapters 5 and 7.

For Fieldbus connections see chapters 6 and 7.

For ID-NET™ Fixed Baudrate connections see the Application Note on the CD-ROM.

The details of the connector pins are indicated in the following table:

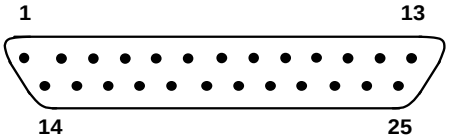

Figure 52 - 25-pin Connector

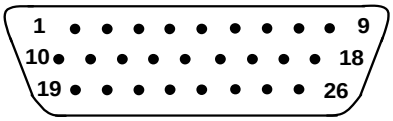

Figure 53 - 26-pin Connector

DS6400 25/26-pin D-sub Connector Pinout		
Pin	**Name**	**Function**
1	CHASSIS	Chassis - internally connected to GND Cable shield connected to chassis
20	RX	Receive Data of Auxiliary RS232 (referred to GND)
21	TX	Transmit Data of Auxiliary RS232 (referred to GND)
8	O1+	Configurable Digital Output 1 - positive pin
22	O1-	Configurable Digital Output 1 - negative pin
11	O2+	Configurable Digital Output 2 - positive pin
12	O2-	Configurable Digital Output 2 - negative pin
16	O3A	Configurable Digital Output 3 - polarity insensitive
17	O3B	Configurable Digital Output 3 - polarity insensitive
18	I1A	External Trigger (polarity insensitive) for PS
19	I1B	External Trigger (polarity insensitive) for PS
6	I2A	Input Signal 2 (polarity insensitive) for Encoder
10	I2B	Input Signal 2 (polarity insensitive) for Encoder
14	I3A	Input Signal 3 (polarity insensitive)
15	I4A	Input Signal 4 (polarity insensitive)
24	I34B	Common reference of Input 3 and Input 4 (polarity insensitive)
9,13	Vdc	Power Supply Input Voltage +
23,25,26	GND	Power Supply Input Voltage -

Main Interface Connector Pinout				
Pin		**RS232**	**RS485 Full Duplex**	**RS485 Half Duplex**
2		TX	TX+	RTX+
3		RX	*RX+	
4		RTS	TX-	RTX-
5		CTS	*RX-	
7		GND_ISO	GND_ISO	GND_ISO

***** Do not leave floating, see par. 4.2.2 for connection details.

Pin 26 is only available for Fieldbus (Ethernet, DeviceNet, or Profibus) models.

4.1 POWER SUPPLY

The supply voltage for correct operation of the scanner must be between 15 and 30 VDC. The max. power consumption is 24 W including startup current.

Datalogic strongly recommends a minimum 24 Vdc supply voltage when using a master/slave configuration. Several accessory power supplies are available to power the DS6400 and reading station components. See par. 1.8.

A security system allows the laser to activate only once the motor has reached the correct rotational speed; consequently, the laser beam is generated after a slight delay from the power on of the scanner.

DS6400 scanners have power ground GND (25/26-pin connector pin 23, 25, 26) as well as the cable Shield (25/26-pin connector pin 1) internally connected to the chassis.

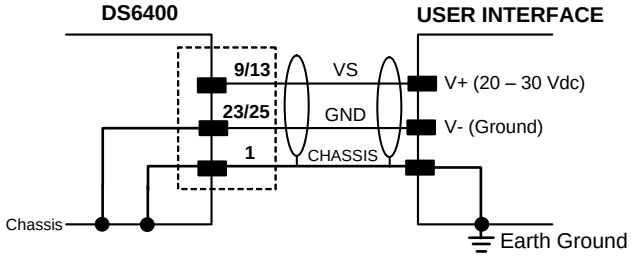

Figure 54 – Power Supply Using the 25/26-pin Connector

4.2 MAIN SERIAL INTERFACE

The main serial interface is compatible with the following electrical standards:

RS232

RS485 full-duplex

RS485 half-duplex

The main interface type and the relative parameters (baud rate, data bits, etc.) can be set using the Genius™ utility program or the Genius™ based Host Mode Programming procedure. For more details refer to the section "Main Serial Port" in the Genius™ Help On Line.

4.2.1 RS232 Interface

The main serial interface is used for communication with the Host computer and allows both transmission of code data and configuring the reader. The overall maximum cable length should not exceed 15 m (50 ft).

The following pins of the 25/26-pin connector are used for RS232 interface connection:

Pin	Name	Function
2	TX	Transmit
3	RX	Receive
4	RTS	Request to send
5	CTS	Clear to send
7	GND_ISO	Main signal ground

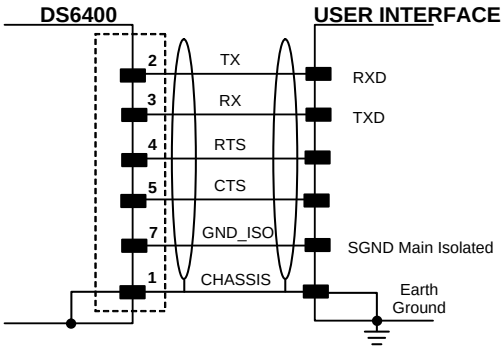

Figure 55 - RS232 Connections

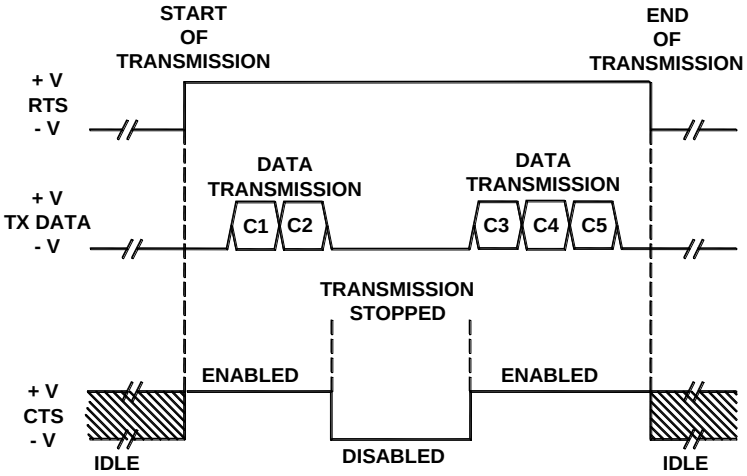

Figure 56 - RS232 Control Signals

The RTS and CTS signals control data transmission and synchronize the connected devices.

If the RTS/CTS handshaking protocol is enabled, the DS6400 activates the RTS output to indicate a message is to be transmitted. The receiving unit activates the CTS input to enable the transmission.

4.2.2 RS485 Full-Duplex Interface

The RS485 full-duplex (5 wires + shield) interface is used for non-polled communication protocols in point-to-point connections over longer distances than those acceptable for RS232 communications or in electrically noisy environments. The overall maximum cable length should not exceed 1200 m (3940 ft).

The following pins of the 25/26-pin connector are used for RS485 full-duplex interface connection:

Pin	Name	Function
2	TX+	RS485 output (+)
3	RX+	RS485 input (+)
4	TX-	RS485 output (-)
5	RX-	RS485 input (-)
7	GND_ISO	Main signal ground

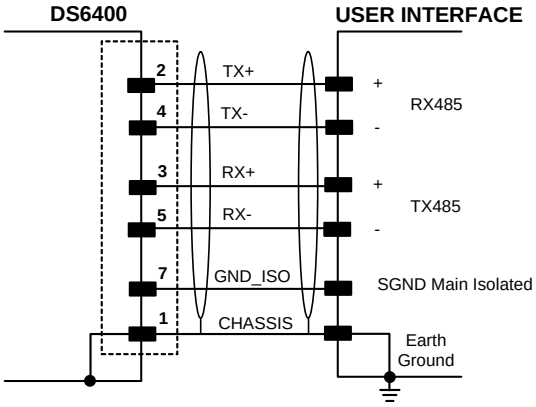

Figure 57 - RS485 Full-Duplex Interface Connections

NOTE

For applications that do not use RX485 signals, do not leave these lines floating but connect them to GND_ISO as shown below.

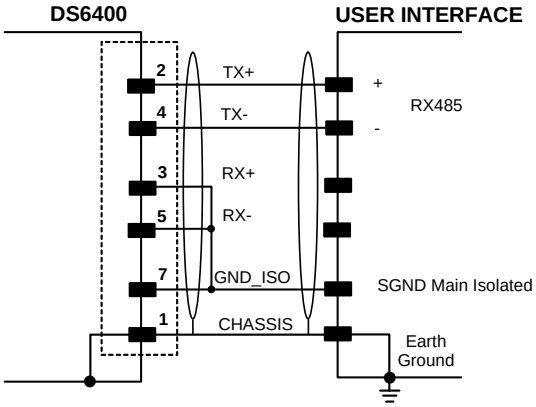

Figure 58 - RS485 Full-Duplex Connections using Only TX Signals

4.2.3 RS485 Half-Duplex Interface

NOTE

This interface is provided for backward compatibility. We recommend using the more efficient Lonworks network for Master/Slave or Multiplexer layouts.

The RS485 half-duplex (3 wires + shield) interface can be used for polled communication protocols.

It can be used for Multidrop connections with a Datalogic Multiplexer, (see par. "Multiplexer" in Appendix A) exploiting a proprietary protocol based on polled mode called MUX32 protocol, where a master device polls slave devices to collect data. The overall maximum cable length should not exceed 1200 m (3940 ft).

The following pins of the 25/26-pin connector are used for RS485 half-duplex interface connection:

Pin	Name	Function
2	RTX+	RS485 input/output (+)
4	RTX-	RS485 input/output (-)
7	GND_ISO	Main signal ground

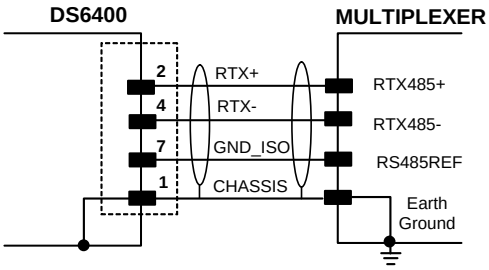

Figure 59 – RS485 Half-Duplex Interface Connections

This interface is forced by software when the protocol selected is MUX32 protocol.

In a Multiplexer layout, the Multidrop address must also be set via serial channel by the Genius™ utility or by the Host Programming Mode.

Figure 60 shows a multidrop configuration with DS6400 scanners connected to a Multiplexer.

CAUTION

This is an example of multidrop wiring. Consult the multiplexer manual for complete wiring instructions.

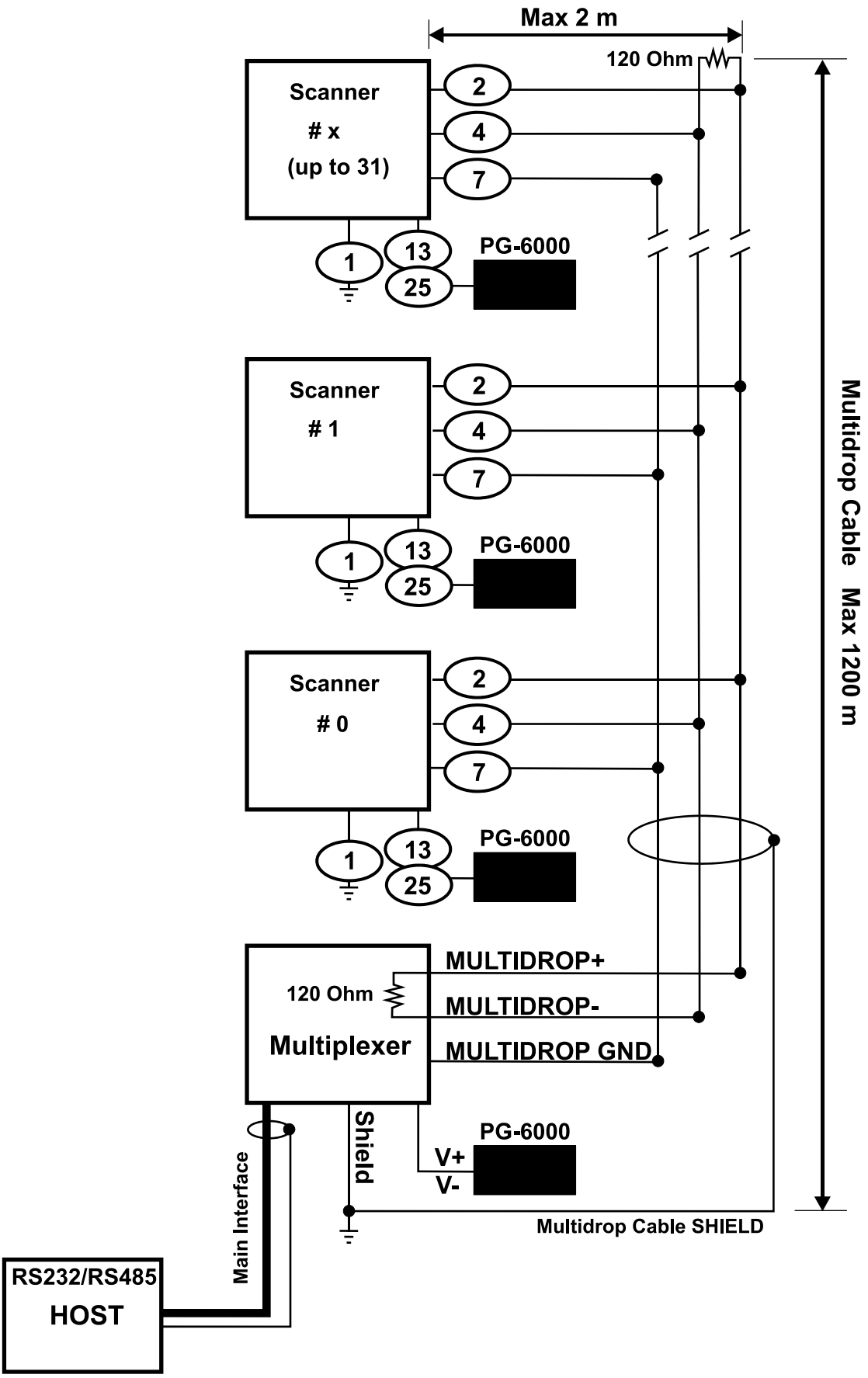

Figure 60 – DS6400 Multidrop Connection to a Multiplexer

4.3 AUXILIARY INTERFACE

The auxiliary serial interface is used exclusively for RS232 point-to-point connections. It is principally used for scanner configuration from a laptop PC but is also available for LOCAL ECHO to a monitoring PC or for Pass through layouts. This interface is active when the Data Tx parameter is enabled. The overall maximum cable length should not exceed 15 m (50 ft).

The following pins of the 25/26-pin connector are used for RS232 full-duplex interface connection:

Pin	Name	Function
20	RX	Receive data
21	TX	Transmit data
23	GND	Common Ground

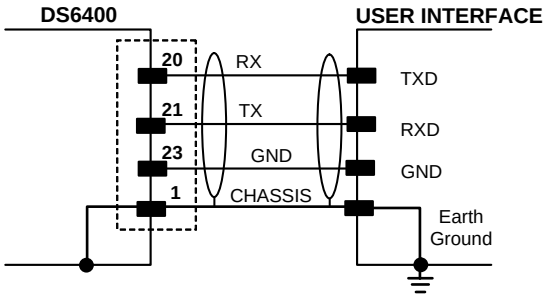

Figure 61 - RS232 Auxiliary Interface Connections

4.4 INPUTS

There are four optocoupled polarity insensitive inputs available on the 25/26-pin connector of the DS6400 scanner: Input 1 (External Trigger/PS), Input 2 (Encoder), Input 3 and 4 generic inputs:

The electrical features of these inputs are:

Maximum voltage	30 Vdc
Maximum current all Inputs:	12 mA

Pin	Name	Function
18	I1A	External Trigger (polarity insensitive) for PS
19	I1B	External Trigger (polarity insensitive) for PS
6	I2A	Input Signal 2 (polarity insensitive) for Encoder
10	I2B	Input Signal 2 (polarity insensitive) for Encoder
14	I3A	Input Signal 3 (polarity insensitive)
15	I4A	Input Signal 4 (polarity insensitive)
24	I34B	Common Reference of Input 3 and Input 4 (polarity insensitive)

The active state of all the inputs is selected in software (open or closed). Refer to the Genius™ Help On Line.

All inputs are optocoupled, polarity insensitive, and driven by a constant current generator; the command signal is filtered through an anti-disturbance circuit which generates a debouncing delay which can be set to 5 ms or 500 μs. In particular, I1 for PS, I3 and I4 share

the same value which usually corresponds to 5 ms when using a photoelectric sensor, while I2 is set to 500 μs when this input is used for the Encoder. The maximum Encoder frequency is **2 kHz**.

Input 1 (External Trigger/PS) is used in the On-Line and PackTrack™ operating Modes and tells the scanner to scan for a code. The yellow Phase On LED (Figure C, 3) which refers to Input 1 is on only when current flows through the input circuit and therefore when the active state of this input is set to "active open", the LED lights up when the input corresponds to OFF.

Input 2 is normally used for the Encoder input. In PackTrack™ mode, it detects the conveyor speed.

Inputs 3 and 4 can be used as the stop signal for the reading phase.

The debouncing delay value can be changed through the software parameter *Debouncing for Input x*, see the "6-8 K Software Configuration Parameter Guide" or Help file.

Powering Inputs
Input devices can be supplied by either scanner power (Vdc and GND) or external power supplies (Vext).

Electrical isolation between the input command logic and the scanner is maintained when powering the input devices from an external supply voltage (Vext).

The driving logic of the input signals may be powered, for convenience, with the voltage supply between pins 9 (Vdc) and 23 (GND) of the 25/26-pin I/O connector. In this case, however, the device is no longer electrically isolated. The voltage available on the 25/26-pin I/O connector, is physically the same as used to power the scanner.

INPUT 1 - 2 CONNECTIONS USING DS6400 POWER

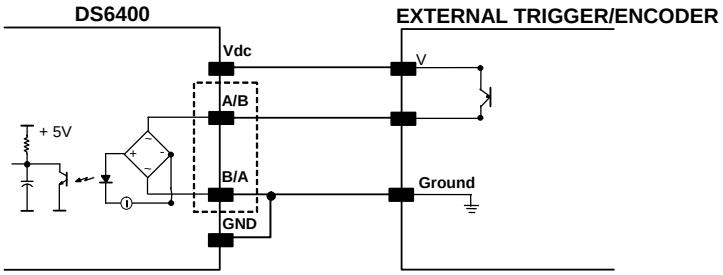

Figure 62 - PNP Command Input Connection Using Scanner Power

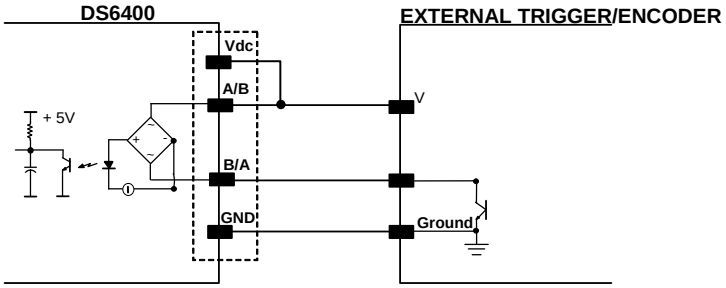

Figure 63 - NPN Command Input Connection Using Scanner Power

INPUT 1 - 2 CONNECTIONS USING EXTERNAL POWER

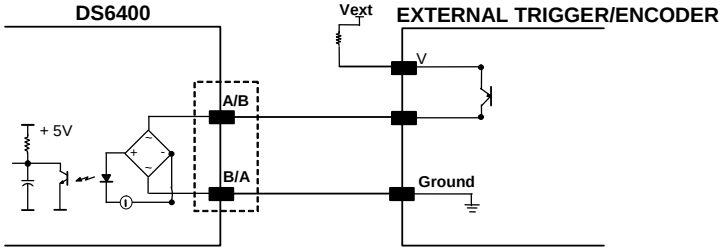

Figure 64 – PNP Command Input Connection Using External Power

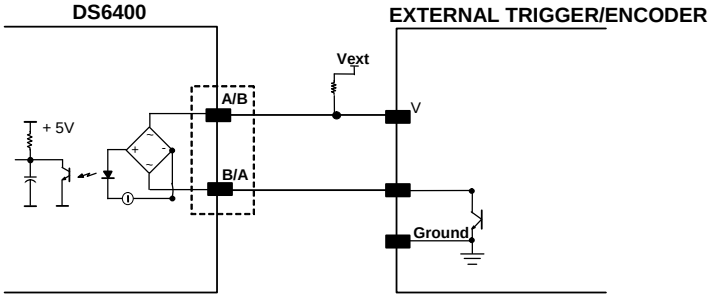

Figure 65 - NPN Command Input Connection Using External Power

NOTE

*Terminal pins **I34B** are common to both inputs 3 and 4 and therefore these inputs cannot be driven by opposite polarity devices.*

INPUT 3 - 4 CONNECTIONS USING DS6400 POWER

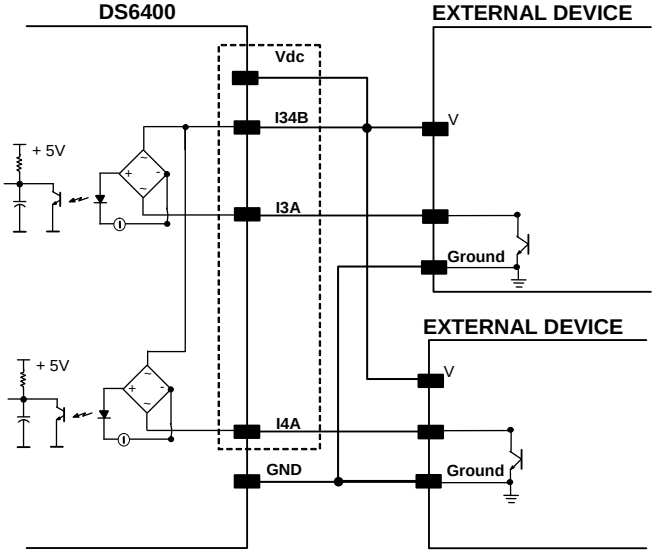

Figure 66 - I3/I4 NPN Input Command using Scanner Power

INPUT 3 - 4 CONNECTIONS USING EXTERNAL POWER

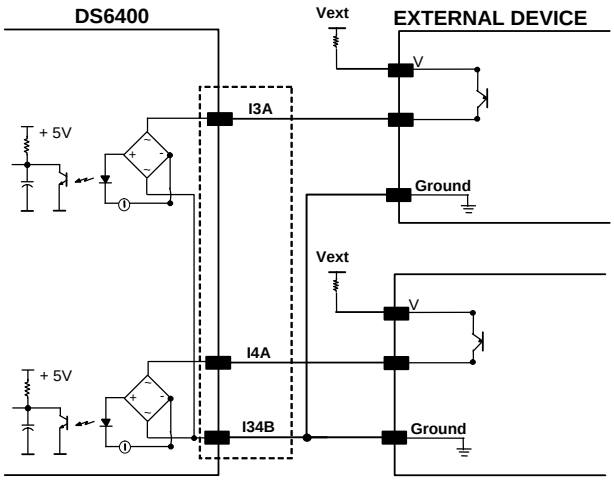

Figure 67 - I3/I4 PNP Input Command using External Power

4.4.1 Code Verifier

If the DS6400 is used as a Code Verifier, the verifier code can be configured in software through the Genius™ configuration program. However it is also possible to use one of the inputs to trigger when the scanner should store a code read as the verifier code.

The Code Verifier parameter must be enabled, and the configuration parameters to allow correct Code Type reading must be saved to the scanner in order to read the verifier code.

When the selected input is activated, the next read code will be stored as the verifier code in the scanner's non-volatile (Flash) memory.

For more details see the Verifier Parameters in the "6-8 K Software Configuration Parameter Guide” or Help file.

4.5 OUTPUTS

Three general purpose outputs are available. The electrical features are given below:

Outputs 1 and 2	
Maximum Voltage	30 V
Collector Current (pulse)	130 mA Max.
Collector Current (continuous)	40 mA Max.
Saturation Voltage (VCE)	1 V at 10 mA Max.
Maximum Power Dissipation	90 mW at 50°C (Ambient temperature)

Output 3 has different electrical features. It is a bi-directional solid state relay with built-in current limit protection.

Output 3	
Maximum Voltage	± 100 V (**Vext only**)
Collector Current (pulse)	300 mA Max. at 25°C (Ambient temperature) 240 mA Max. at 50°C (Ambient temperature)
Collector Current (continuous)	200 mA Max. at 25°C (Ambient temperature) 150 mA Max. at 50°C (Ambient temperature)
R on R off	6 – 15 Ω > 500 Ω
Off-State Leakage Current	< 1 µA
Maximum Power Dissipation	550 mW at 50°C (Ambient temperature)

Pin	Name	Function
8	O1+	Configurable digital output 1 – positive pin
22	O1-	Configurable digital output 1 – negative pin
11	O2+	Configurable digital output 2 – positive pin
12	O2-	Configurable digital output 2 – negative pin
16	O3A	Configurable digital output 3 – polarity insensitive
17	O3B	Configurable digital output 3 – polarity insensitive

The function of each output can be defined by the user (No Read, Right, Wrong, etc.). Refer to the Genius™ Help On-Line for further details.

The output signals are fully programmable being determined by the configured Activation/Deactivation events, Deactivation Timeout or a combination of the two.

By default, Output 1 is associated with the Complete Read event, which activates when all the selected codes are correctly decoded, and Output 2 is associated with the No Read event, which activates when the code signaled by the external trigger/PS is not decoded.

Output 3 can be assigned to the same events and it has the advantage of being polarity insensitive. By default it is not assigned to any event.

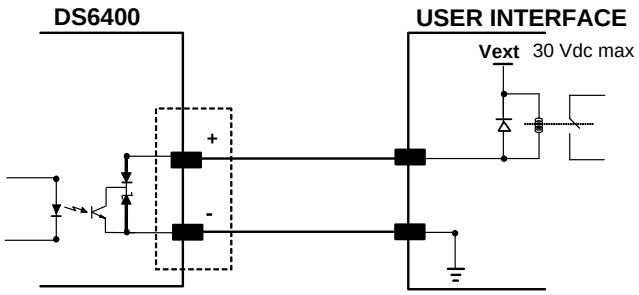

Figure 68 – Output 1 and Output 2 Interface

When the load is powered by an external power supply, the voltage must be less than 30 V.

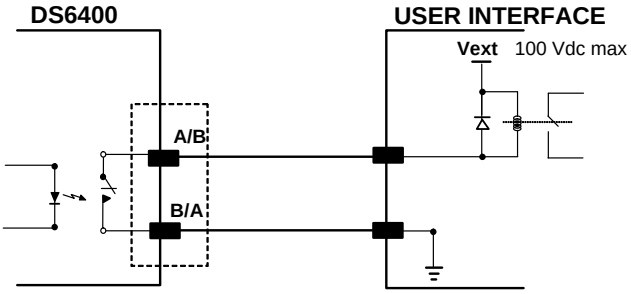

Figure 69 – Output 3 Interface

The command signals are filtered and generate a delay of about 50 µs for Output 1 and 2 and 1 ms for Output 3.

4.6 USER INTERFACE

How To Build A Simple Interface Test Cable:

The following wiring diagram shows a simple test cable including power, external (push-button) trigger and PC RS232 COM port connections.

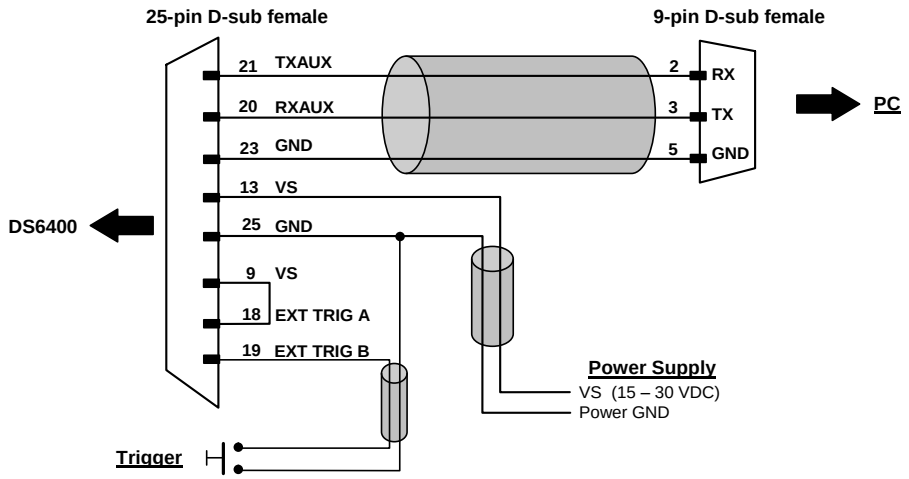

Test Cable for DS6400

5 LONWORKS CONNECTIONS

CAUTION

Do not connect an RS232 port to the 9-pin Lonworks Connector. This may damage your Laptop PC.

The local network used by DS6400 exploits a Lonworks standard communication system requiring only two wires (polarity insensitive) to enable a connection. The connector also provides a positive and a negative supplying wire. In this way, all the slave readers can be powered by the master through the Datalogic standard cables.

When working in applications requiring enhanced synchronization capabilities, the DS6400 master reader (output) transmits two system signals named Sys_I/O and Sys_Enc_I/O to the slave readers (input). For example, when working with applications requiring an encoder the signal is received by the master and directly transmitted to the slaves through the cable.
The internal circuits generating the system signals are externally supplied by means of the VS_I/O and REF_I/O pins and are isolated from the reader supply voltage.

The use of these system circuits is not required in all the operating modes. Anyway, for correct system functioning it is suggested to use Datalogic cables and accessories and follow the description of the typical layouts (see chapter 7 for details).

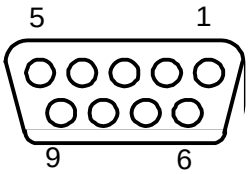

Female (all models)

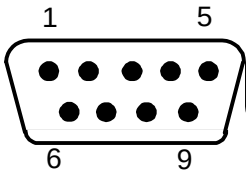

Male (Master/Slave model)

Figure 70 - 9-pin Local Lonworks Connectors

The following pinout is valid for both connectors.

DS6400 9-pin Lonworks Connector Pinout		
Pin	**Name**	**Function**
1	CHASSIS	Cable shield internally connected by capacitor to chassis
9	VS	supply voltage 15 to 30 vdc (positive pin)
2	GND	supply voltage (negative pin)
6	VS_I/O	Supply voltage of I/O circuit
3	Ref_I/O	Reference voltage of I/O circuit
4	SYS_ENC_I/O	System signal
5	SYS_I/O	System signal
7	LON A	Lonworks line (polarity insensitive)
8	LON B	Lonworks line (polarity insensitive)

5.1 NETWORK TERMINATION

When building a Lonworks system the network must be properly terminated by positioning the BT-6000 Lonworks terminator in the DS6400 master reader and in the last DS6400 slave reader.

Each side of the terminator provides a different connector; thus, it can be inserted either into the Lonworks 9-pin male connector of the master reader or in the Lonworks 9-pin female connector of the last slave reader:

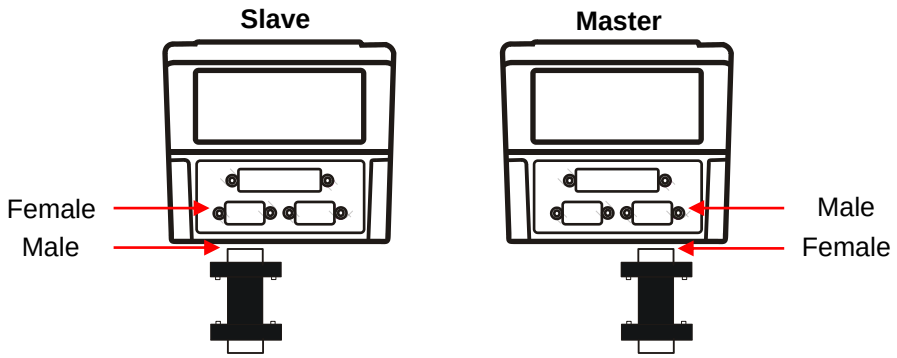

Figure 71 - BT-6000 Network Terminator

NOTE

For Fieldbus models (Ethernet, DeviceNet, or Profibus), no terminator must be inserted in the reader, since it is internally integrated.

5.2 LONWORKS INTERFACE

The Lonworks network is used for both input and output connection to build a multi-sided or omni-station system connecting several readers.

The DS6400 master usually employs the 9-pin female connector for output connection to the first slave, while the 9-pin male connector is terminated by inserting the BT-6000 terminator (see Figure 71 for details). If creating a T-network configuration, it is necessary to use both connectors to create the double branch line of slave readers.

Both connectors are always employed when connecting together the slave readers. In particular, the 9-pin female connector is used for output connection and the male one for input connection. The female connector in the last slave reader is terminated by the BT-6000 to close the system network.

The following diagram represents the connection between a DS6400 working as master and a DS6400 working as a slave reader.

The cable shield for LON A/B is connected to pin1 - CHASSIS.

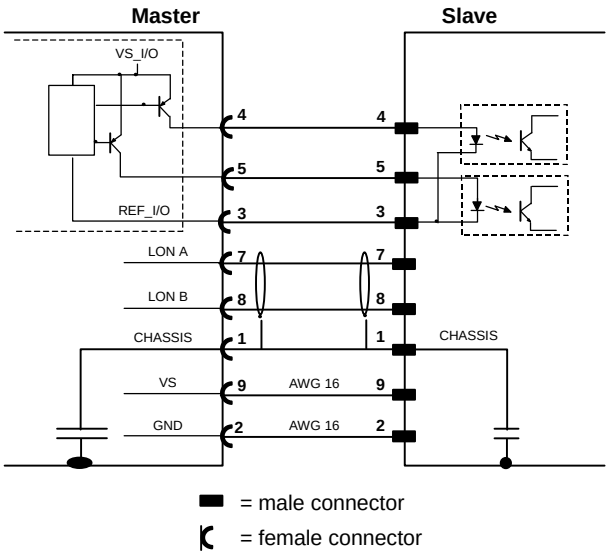

Figure 72 – DS6400 Master/Slave Lonworks Connection

CAUTION

The maximum current to be propagated to the Slave readers through the Master is 2 A. For this reason, it is suggested to use a 24 Vdc power supply capable of supplying up to three readers (Master + 2 Slaves).

The following diagrams represent different network terminations using the BT-6000 Lonworks terminator. In Figure 74 the BT-6000 terminator is indicated by the T element, while the figure below shows its electrical circuit in details:

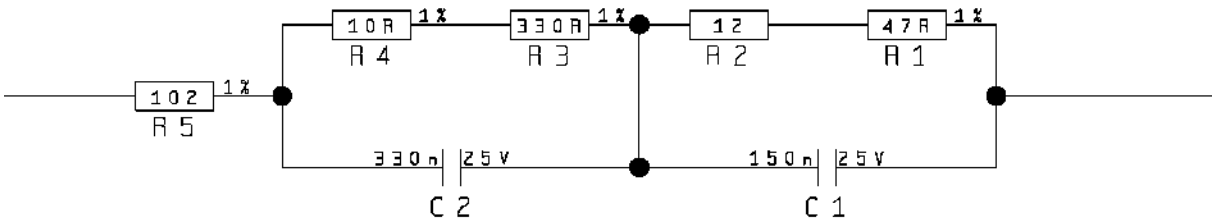

Figure 73 – BT-6000 Electrical Circuit

The diagram below represents the termination of a DS6400 (Master/Slave model) working as master by means of the BT-6000.

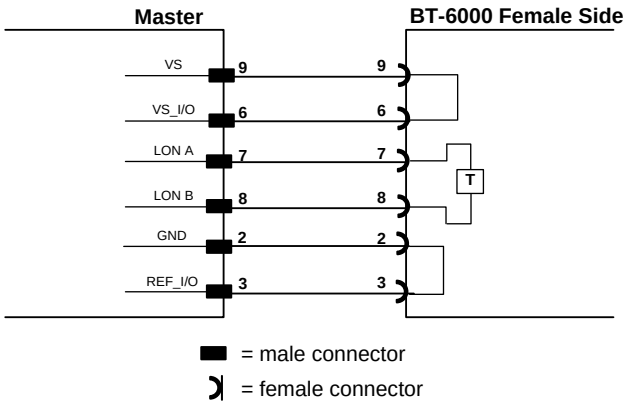

Figure 74 – DS6400 Master Termination

The diagram below represents the termination of a DS6400 (Master/Slave model) working as slave by means of the BT-6000 terminator.

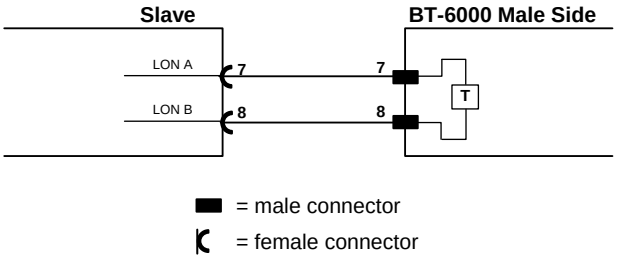

Figure 75 – DS6400 Slave Termination

The diagram below represents the connection between a DS6400 Fieldbus model, which always works as master, and a Master/Slave model working as a slave reader.

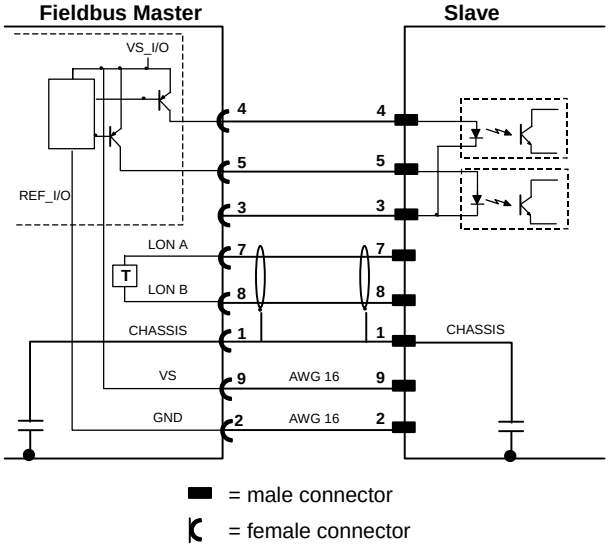

Figure 76 – DS6400 Fieldbus Master to Slave Lonworks Connection

The Fieldbus master is internally terminated.

6 FIELDBUS CONNECTIONS

6.1 ETHERNET INTERFACE

This connector is only available for DS6400 Ethernet models and allows the Ethernet connection between the host and the reader.

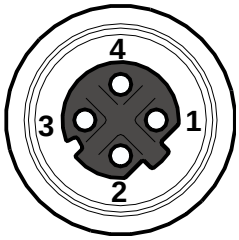

Figure 77 –DS6400 M12 4-pin D-Coded Female Ethernet Connector

This interface and the connector pinout (see the following table) are IEEE 802.3 10 BaseT and IEEE 802.3u 100 Base Tx compliant.

M12 4-pin D-coded Female Pinout		
Pin	**Name**	**Function**
1	TX +	Transmitted data (+)
2	RX +	Received data (+)
3	TX -	Transmitted data (-)
4	RX -	Received data (-)

In order to meet EMC requirements use Ethernet shielded cable.

The Ethernet interface can be used for TCP/IP communication with a remote or local host computer by connecting the scanner to either a LAN or directly to a host PC. There is no need to use a crossover adapter since scanner incorporates an auto-cross function.

The following is an example of a connection to a LAN using a **CAB-ETH-M0x** straight through cable:

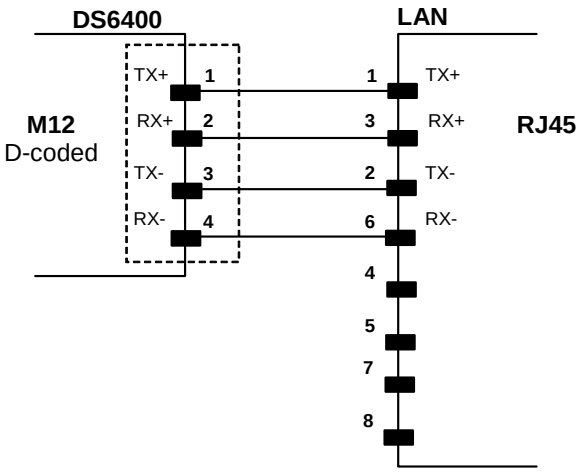

Figure 78 – Straight Through Cable

For further details refer to the “Ethernet Service Guide” document provided as reference documentation.

6.2 ETHERNET INTERFACE (OLDER MODELS)

The RJ45 connector is only available for older DS6400 Ethernet models and allows the Ethernet connection between the host and the reader.

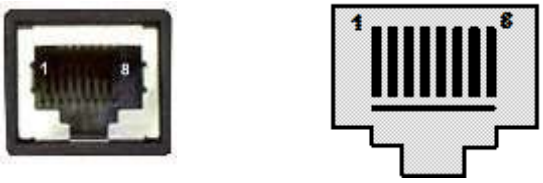

Figure 79 – DS6400 RJ45 Female Modular Connector

This interface and the connector pinout (see the following table) are IEEE 802.3 10 BaseT and IEEE 802.3u 100 Base Tx compliant.

RJ45 Modular Jack Pinout		
Pin	**Name**	**Function**
1	TX +	Transmitted data (+)
2	TX -	Transmitted data (-)
3	RX +	Received data (+)
6	RX -	Received data (-)
4, 5, 7, 8	N.C.	Not connected

In order to meet EMC requirements:

- use Ethernet shielded cable
- connect the Ethernet interface cable shield to the plant earth ground

NOTE

The cable shield must be connected to the chassis of both connectors.

A ferrite (type Stewart 28A2029-0A0) may also be applied on the scanner side of the Ethernet cable to reduce electrical noise.

The Ethernet interface can be used for TCP/IP communication with a remote or local host computer by connecting the scanner to a LAN. It can also be connected directly to a host PC.

The following is an example of a connection to a LAN through a Hub using a straight through cable:

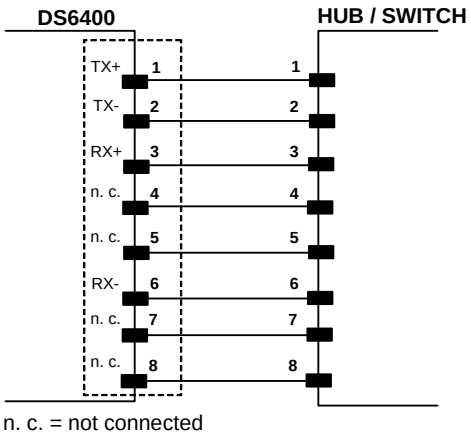

Figure 80 – Straight Through Cable

The following is an example of direct connection to a PC using an inverted cable:

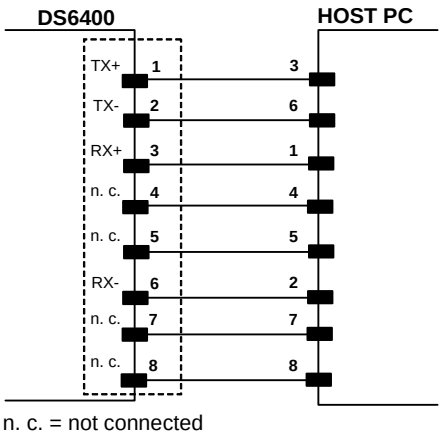

Figure 81 – Inverted or Cross Cable

For further details refer to the “Ethernet Service Guide” document provided as reference documentation.

6.3 DEVICENET INTERFACE

NOTE

When using DeviceNet, the Main serial interface is disabled and must not be physically connected.

The 5-pin male connector is only available in the DS6400 DeviceNet model and allows connection between the host and the reader:

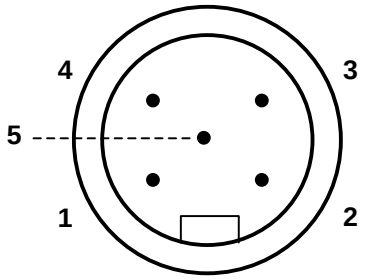

Figure 82 - DeviceNet 5-pin Male Connector

DS6400 5-pin DeviceNet connector pinout		
Pin	**Name**	**Function**
2	V +	Supply voltage – positive pin
5	CAN_L	CAN bus data line – L
1	SHIELD	Shield
4	CAN_H	CAN bus data line – H
3	V -	Supply voltage – negative pin

NOTE

The power supplied on pin V+ and V- is used <u>only</u> to propagate power to the section of the DeviceNet board directly connected to the Bus. It is completely isolated from the DS6400 power which must be supplied on pin 9, 13 and pin 23, 25 of the 26-pin Main/Aux connector.

6.4 PROFIBUS INTERFACE

The 9-pin Profibus female connector (white) is only available in the DS6400 Profibus model and allows connection between the host and the reader:

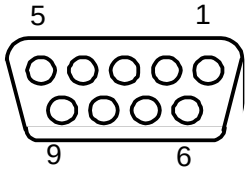

Figure 83 - Profibus 9-pin Female Connector

DS6400 9-pin Profibus connector pinout		
Pin	**Name**	**Function**
1	Shield*	Shield, Protective Ground resp.
2	Free	
3	B-LINE (RxD/TxD-P)	Received/Transmitted Data-P
4	CNTR-P**	Repeater Control Signal
5	DGND	Data Ground (M5V)
6	+5 V	Voltage Plus (P5V)
7	Free	
8	A-LINE (RxD/TxD-N)	Received/Transmitted Data
9	CNTR-N**	Repeater Control Signal

* signal is optional

** signal is optional; RS485 level

The Profibus interface is used for communication with an Host and allows expanding the networking and remote diagnostic capabilities of the scanner.

For further details refer to the “Profibus_Fam6k.pdf” document provided as supplementary documentation.

7 TYPICAL LAYOUTS

DS6400 scanners are mainly designed to work together on a high performance Lonworks sub-network to create multi-sided and omnidirectional reading stations that can interface with Serial or Fieldbus Host networks. This chapter covers the most common Lonworks layouts.

DS6400 scanners can however, be connected in a variety of layouts depending on the number of scanners used and the required complexity of the reading station. Layouts range from single Stand Alone to complex alternative networks when Lonworks is not available for all readers (mixed reader networks). For alternative layouts see appendix A.

Several power supplies are available to power the reading stations.

Photoelectric sensors used as code presence sensors and optical encoders to signal conveyor speed are also available accessories.

The following typical layouts refer to the system hardware configurations, but they also require the correct setup of the software configuration parameters (see par. 8.2 for details).

The accessories and cables indicated in the following figures are Datalogic products. We suggest their use to guarantee the correct system functioning.

7.1 LOCAL LONWORKS NETWORK

A local Lonworks network allows logically connecting a DS6400 master reader with up to 31 DS6400 slaves. Actually, the maximum number of readers to be employed in the network depends on the system operating conditions; that is, adopted operating mode and amount of data stream.

When creating your network, always keep in mind the following guidelines:

- the Lonworks network logically supports a maximum number of 32 devices (master + slaves);
- it is recommended to adhere to the 8-in-16 rule (not more than 8 devices in any 16 meter bus segment (branch);
- for DS6400 scanners the total bus length may extend up to 130 m (426 ft);
- the maximum number of DS6400 readers supported also depends on the type of power propagation adopted by the system (see the specific power supply installation manual for details).

Typically the layouts can be divided into Synchronized (single P.S.) or Multidata (multi P.S.) networks. They can be small (up to 10 scanners) or large (more than 10 scanners).

Contact Datalogic Automation S.r.l., if your network requires a higher number of readers or in case the application throughput is very high.

For further information on Lonworks network cabling and connections see the “LonWorks® TPT Twisted Pair Transceiver Module User’s Guide”, available from the website: www.echelon.com.

NOTE

For some DS6400 Lonworks Network layouts, power is propagated through the 9-pin scanner connectors. A specific jumper setting is required in CBXs to pass scanner power to the presence sensor, encoder, etc.

7.1.1 Small Synchronized Network

When building a small local Lonworks network (less than 10 scanners), the DS6400 master reader must be connected to a local host computer or a CBX connection box by means of a cable connected to the 25/26-pin D-sub male connector.

The master reader connects to the first slave reader of the system through the local Lonworks 9-pin female connector. For Master/Slave models, the local Lonworks 9-pin male connector must be properly terminated by inserting the BT-6000 Lonworks terminator. Fieldbus models (Ethernet, DeviceNet, or Profibus), are internally terminated.

The slave readers are connected together through the local Lonworks connectors. Only the 9-pin female connector of the last slave reader must be terminated by the BT-6000 Lonworks terminator.

The presence sensor is connected and powered through the CBX by the scanner and is unique to the system. There is only a single reading phase and a single message from the master reader to the Local Host. The **On-Line** operating mode is used for this layout.

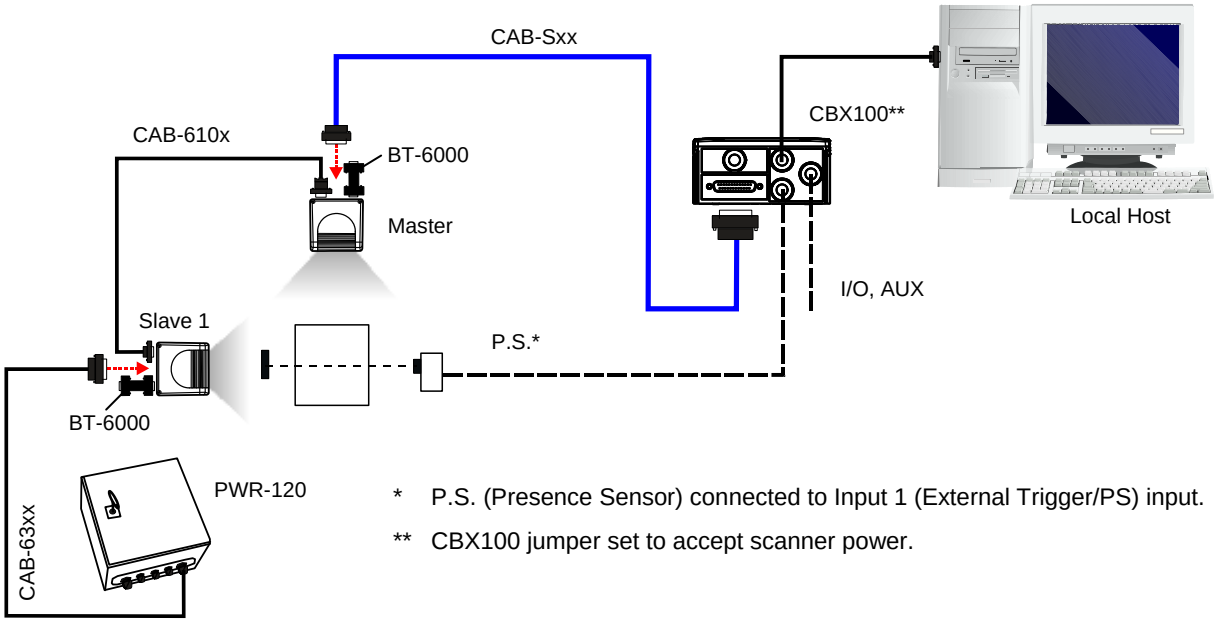

Figure 84 – Small Synchronized Network with 2 Readers

The following image shows a system consisting of five readers (mixed 8K and 6K) where the external signals (trigger, encoder, serial to host, etc.) are connected to the master through the CBX100.

Note: In a mixed 8K and 6K family scanner network, only the 8K family scanner can be Master.

The entire system is powered by the PWR-240 where:

- Power is distributed through two CAB-63xx cables to avoid excessive current draw.
- the master is connected to the CBX100 through the CAB-F0x, and provides power to the PS and Encoder.
- The Master DS8100A is terminated with the BTK-8102 and the last slave DS6400 is terminated with the BT-6000.

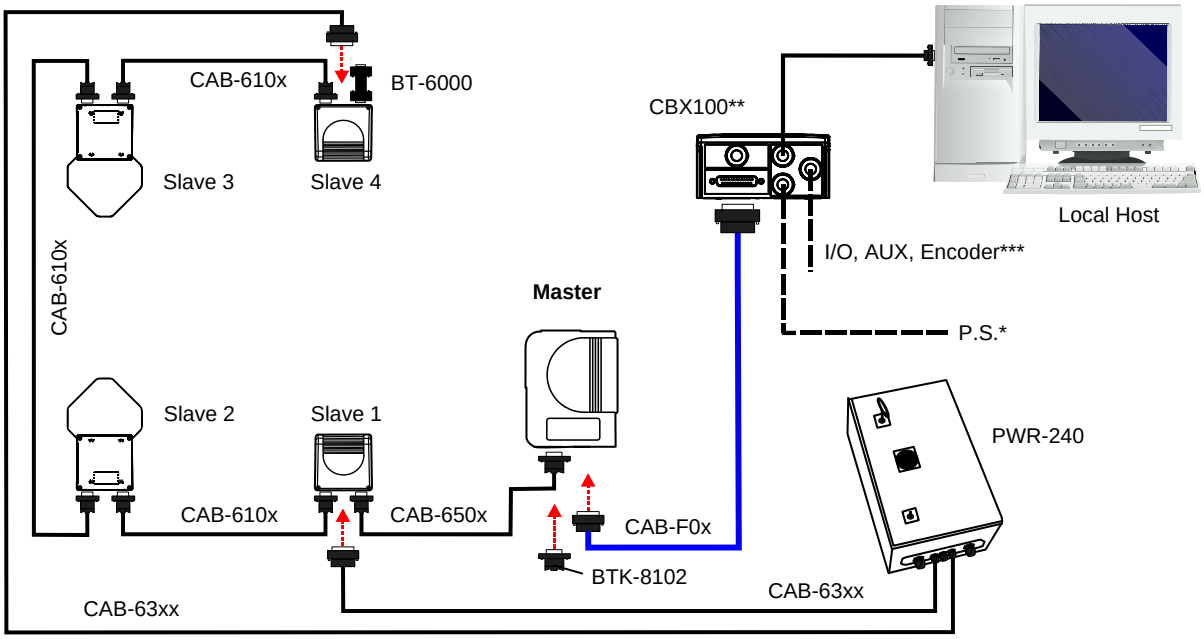

* P.S. (Presence Sensor) connected to Input 1 (External Trigger/PS) input.

** CBX100 jumper set to accept scanner power.

*** Encoder connected to Input 2 (Encoder) input.

Figure 85 –Synchronized Network with DS8100A Master and 6K Family Slaves - Serial Host

NOTE

If a single power source is used, it is not necessary to separate groups of scanners with CAB-611x "no power" cables.

7.1.2 Multidata Network

In this layout, one master and up to 7 DS6400 slave readers have their own P.S. and therefore multiple reading phases. Each P.S. is connected through a CBX100, which in turn is connected to its relative scanner through a CAB-Sxx cable.

Typically these systems are reading stations which are located relatively far away from each other and are therefore usually each powered separately. In this case, the Lonworks network must use CAB-611x "no power" cables.

The master sends all the individual messages collected from the Lonworks interface as well as its own to the Local Host through its CBX100.

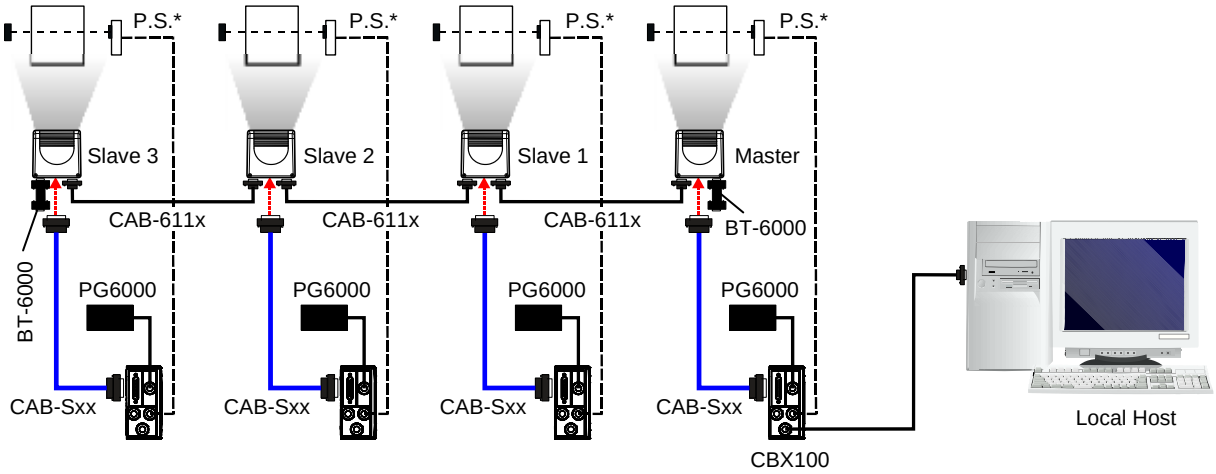

* Each P.S. (Presence Sensor) connected to Input 1 (External Trigger/PS) input.

Figure 86 – Multidata Network

7.1.3 Fieldbus Networks

The Fieldbus models (Ethernet, DeviceNet, or Profibus) offer connectivity without any converter or adapter needed.

The DS6400 Lonworks master communicates as a Fieldbus slave to a remote host (i.e. remote PC connected via Internet or PLC Fieldbus Master) by means of a cable connected to the Fieldbus connector provided. It can be activated by a signal generated by the remote Host or by a physical presence sensor.

The external signals (trigger, encoder) are connected to the master through the CBX100.

The entire system is powered by the PWR-240 where:

- Power is distributed through two CAB-63xx cables to avoid excessive current draw.
- The master is connected to the CBX100 through the CAB-F0x, and provides power to the PS and Encoder.
- Since the master DS6400 is a Fieldbus model, it is internally terminated. The last slave DS6400 is terminated with the BT-6000.
- The master connects directly to the remote host through its Fieldbus interface.

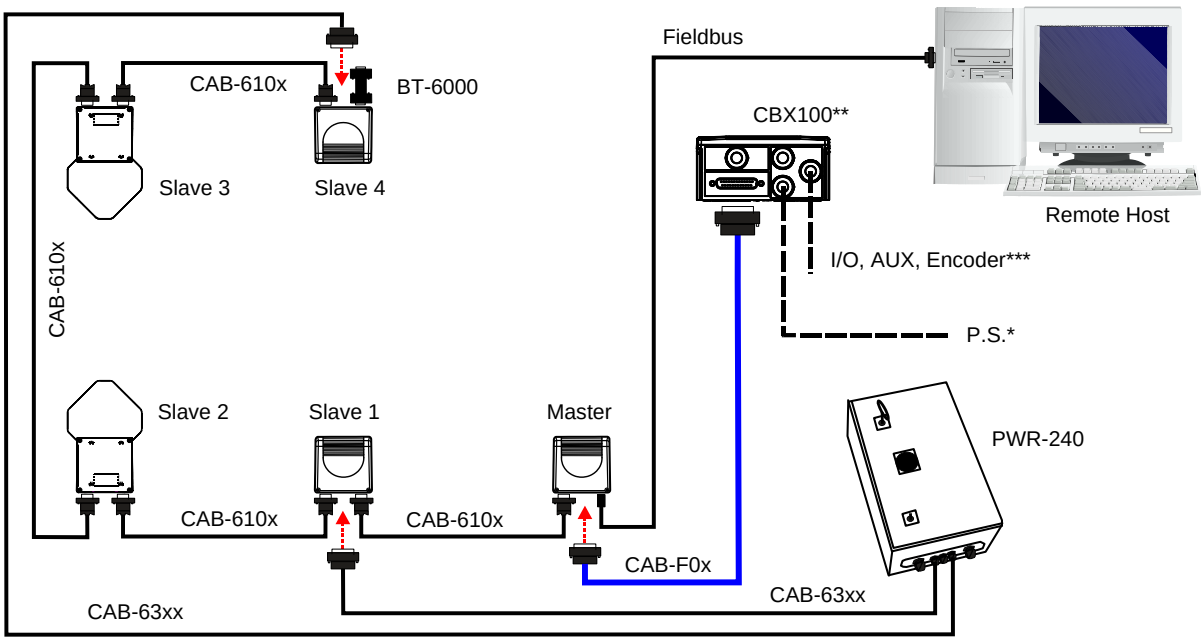

* P.S. (Presence Sensor) connected to Input 1 (External Trigger/PS) input.

** CBX100 jumper set to accept scanner power.

*** Encoder connected to Input 2 (Encoder) input.

Figure 87 – Synchronized Network with DS6400 Master and 6K Family Slaves - Fieldbus Host

NOTE

To interface DS6400 scanners to other Host types (Fieldbus and non-Fieldbus), use the CBX800 Gateway with Host Interface Modules. The Master scanner in this case is a standard Master/Slave Serial model which requires the BT-6000 terminator.

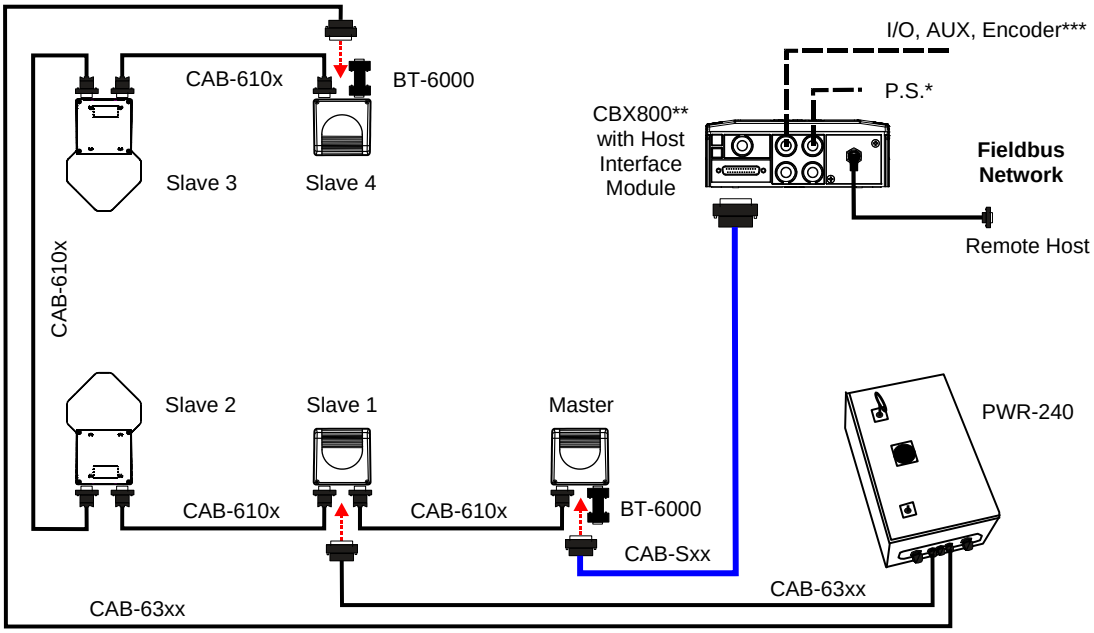

* P.S. (Presence Sensor) connected to Input 1 (External Trigger/PS) input.

** CBX800 jumper set to accept scanner power.

*** Encoder connected to Input 2 (Encoder) input.

Figure 88 – CBX800 Gateway Fieldbus Synchronized Network

The following Host Interface Module accessories are available for the CBX800 Gateway:

NAME	**Description**	**Part Number**
BM200/210	Ethernet TCP/IP Module STD/IP65	93ACC1851, 93ACC1852
BM300/310	Profibus Module STD/IP65	93ACC1810, 93ACC1811
BM400	DeviceNet Module IP65	93ACC1814
BM500/510/520	Ethernet/IP Module STD/IP65/IP54	93ACC1812, 93ACC1813, 93ACC1840
BM600	CANopen Module STD	93ACC1815
BM700/710	Profinet Module STD/IP65	93ACC1816, 93ACC1886
BM1100	CC-Link Module STD	93ACC1845
BM1200/1210	Modbus TCP STD/IP65	93ACC1848, 93ACC1849

8 SOFTWARE CONFIGURATION

8.1 GENIUS™ INSTALLATION

Genius™ is a new Datalogic scanner configuration tool providing several important advantages:

- Wizard approach for new users;
- Multi-language version;
- Defined configuration directly stored in the reader;
- Communication protocol independent from the physical interface allowing consideration of the reader as a remote object to be configured and monitored.

To install Genius™, proceed as follows:

1) Turn on the PC that will be used for configuration, running either Windows 98, 2000/NT, XP, Vista or 7;
2) Insert the Genius™ CD-ROM;
3) Wait for the CD to autorun and follow the installation procedure.

8.2 GUIDE TO RAPID CONFIGURATION

8.2.1 Wizard for Quick Reader Setup

After installing the Genius™ software program (see above), and running it, the following window appears asking the user to choose the desired configuration level:

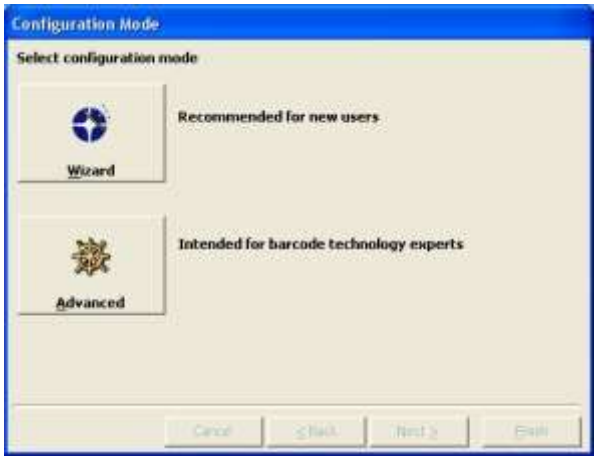

Figure 89 - Genius™ Wizard Opening Window

The Wizard option is advised for new users, since it shows a step-by-step scanner configuration. The parameters to be defined are the following:

- Barcode selection and definition;
- Operating mode selection and definition (see sub-paragraphs for further details);
- Digital Inputs/Outputs configuration;
- Hardware interface selection;
- Output data format configuration.

After defining the parameter values the following window appears allowing to complete the reader configuration as follows:

- Saving the configuration to disk;
- Switching to Advanced mode;
- Sending the configuration to the scanner.

Figure 90 - Genius™ Wizard Closing Window

Test Operating Mode

NOTE	*This operating mode is not available when DS6400 works as slave.*

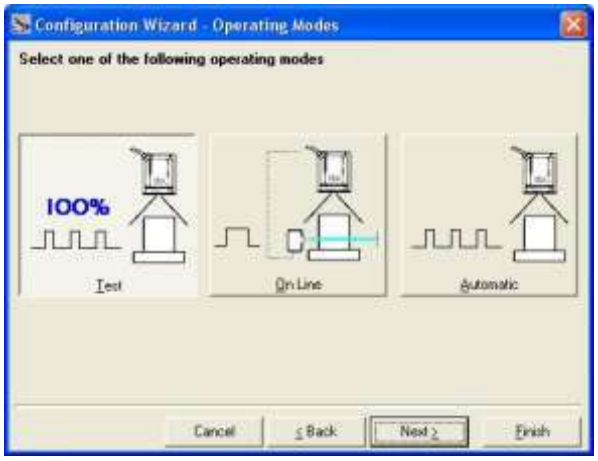

Figure 91 - Test Mode Selection

This operating mode causes the reader to be continuously activated allowing verification of its reading features and its reading position with respect to the barcode. For this reason, it is particularly advised during the installation phase of the reader.

After 100 scans, the values relative to an internal counter and the decoded code are displayed and transmitted on the serial interface. The counter reports the percentage of good reads of the label.

On Line Operating Mode

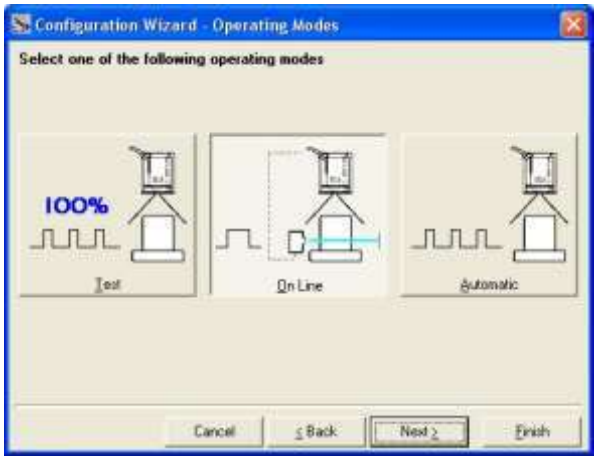

Figure 92 - On Line Mode Selection

This operating mode causes the reader to be connected to an external Presence Sensor using I1A and I1B (External Trigger/PS) inputs.

During the active phase of the presence sensor, the DS6400 reader tries to acquire and correctly decode the code.

In case the decoding phase is successful, the barcode characters are transmitted on the serial interface. Otherwise, a no read message is sent.

Automatic Operating Mode

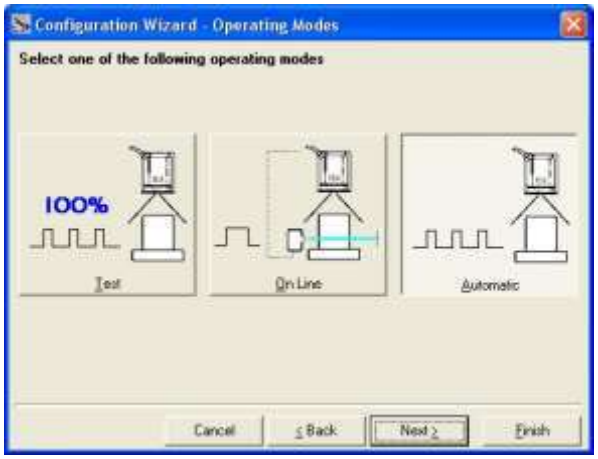

Figure 93 - Automatic Mode Selection

This operating mode does not require the connection to an external Presence Sensor.

When working in this mode the reader is continuously scanning. The reading phase is activated each time a barcode enters the reading zone. The reader stops reading after an N number of scans without a code. Barcode characters are transmitted on the serial interface. In case of a failed reading phase no message is sent to the host computer.

8.2.2 Genius™ Network Setup Through Master

Network Setup allows configuring your Local Lonworks Network through the Master using Genius™.

Three different procedures are available to define the number of network slave scanners, their label and address according to two main conditions:

Condition	Available Procedure	Feature
Unknown Slave Addresses	Net-Autoset	automatically assigns random addresses to slave or Stand Alone scanners.
Known Slave Addresses	Network Wizard	customizes the network (slave label and address definition and physical identification of a specific slave within network), updates configuration to a file and makes it ready to be sent to the Master.
	Express Network Setup	automatically performs all the operations of the Network Wizard apart from the physical identification of a specific slave scanner.

NOTE

The Network Setup procedure as described requires Genius™ software version 1.06 or later. In addition, the Net-Autoset procedure requires scanner software version 6.40 or later.

1. **The first operation** to perform is the configuration of your **scanner as "Master**" from the Local Device Network Settings item in the Device Menu, see figure below:

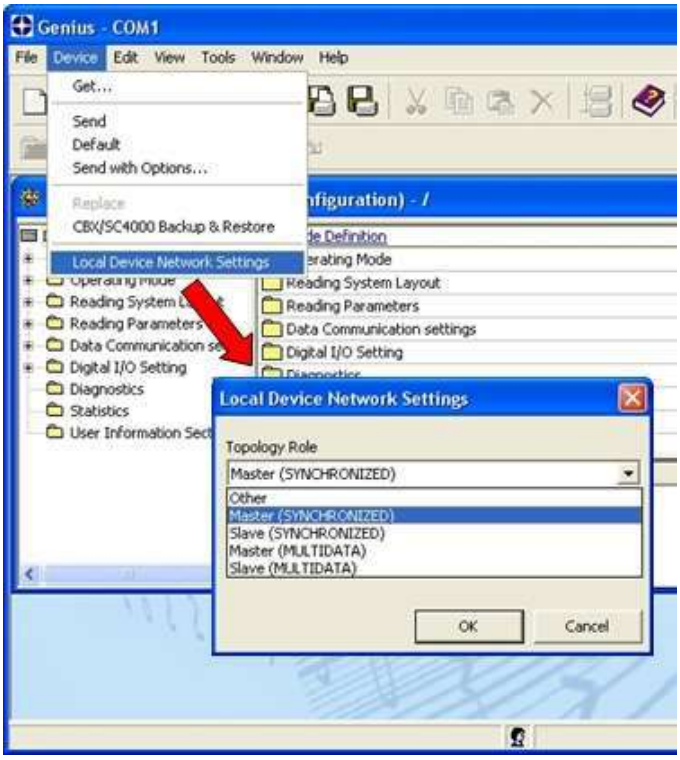

Figure 94 – Local Device Network Settings

The following dialog box appears asking whether to send the configuration to the Local Device or not:

2. Click the "Yes" button, then click on the icon available on the Toolbar to make the “Devices” area appear next to the Parameter Explorer window. By repeatedly clicking the icon this area will be displayed or hidden.

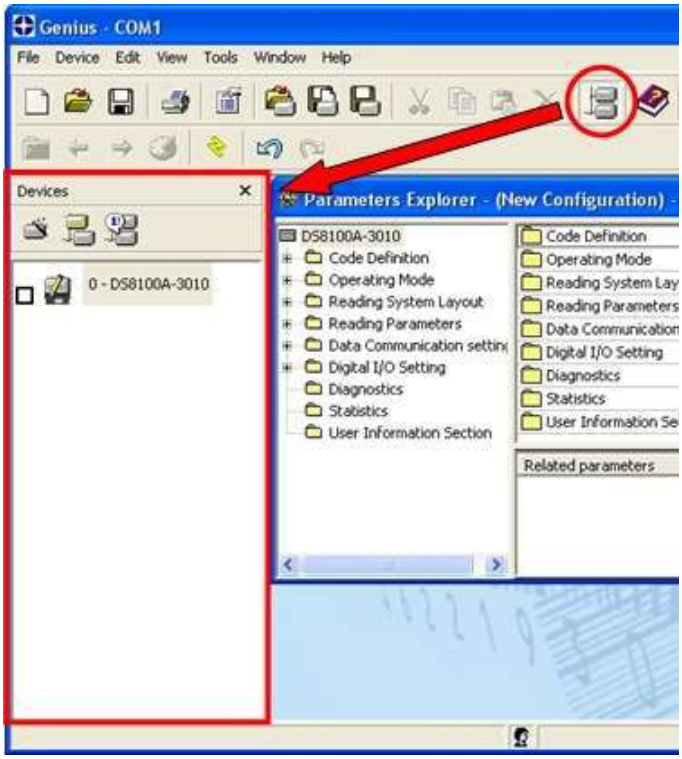

Figure 95 – Cluster Configuration

Each scanner of the cluster is indicated by the following graphical objects:

- check box allowing to select/deselect a specific scanner to perform the desired operations (i.e. program downloading);
- icon representing the scanner status;
- a label reporting information transmitted by the scanner when connected (the scanner address, generated errors, scanner description).

3. **Then, proceed with the network setup** by using one of the icons available on the Tool Bar according to the procedure to follow:

= Net-Autoset procedure

= Network Wizard procedure

= Express Network Setup procedure

Net-Autoset

This procedure is to be used when all scanner addresses and labels are unknown (typically when configuring the network for the first time or whenever a network reconfiguration is required).

By clicking the icon or selecting the "Net_Autoset" option from the right-click menu, the Net-Autoset procedure is started allowing automatic assignment of random addresses to all slave or Stand Alone scanners connected within the network.
Once the procedure has been completed, it is possible to:

- define customized addresses and labels through the Network Wizard;
- display the scanner default labels through the Express Network Setup.

Express Network Setup

Before performing this procedure, a Lonworks address must be assigned to each slave scanner. The most practical method is through the Net-Autoset procedure. See par. 8.2.3 for alternative address assignment methods.

Once all addresses have been assigned, the Express Network Setup is to be used when all scanner addresses and labels do not need to be modified.

By clicking on the icon or by choosing the related option from the right-click menu, the procedure is started which automatically performs the following operations:

- opening the wizard;
- polling the network to discover connected scanners;
- transferring all scanners found to the "Requested Devices" area of the wizard where your network customization is defined;
- saving the new network configuration;

Once the procedure has been completed, a dialog box will appear asking whether to send the configuration to the Master. Choose the “Yes” option to start this procedure.

Network Wizard

Before performing this procedure, a Lonworks address must be assigned to each slave scanner. The most practical method is through the Net-Autoset procedure. See par. 8.2.3 for alternative address assignment methods.

Once all addresses have been assigned, the Network Wizard is to be used when one or more scanner addresses and labels need to be modified.

1. Click on the button to open the Network Wizard dialog box:

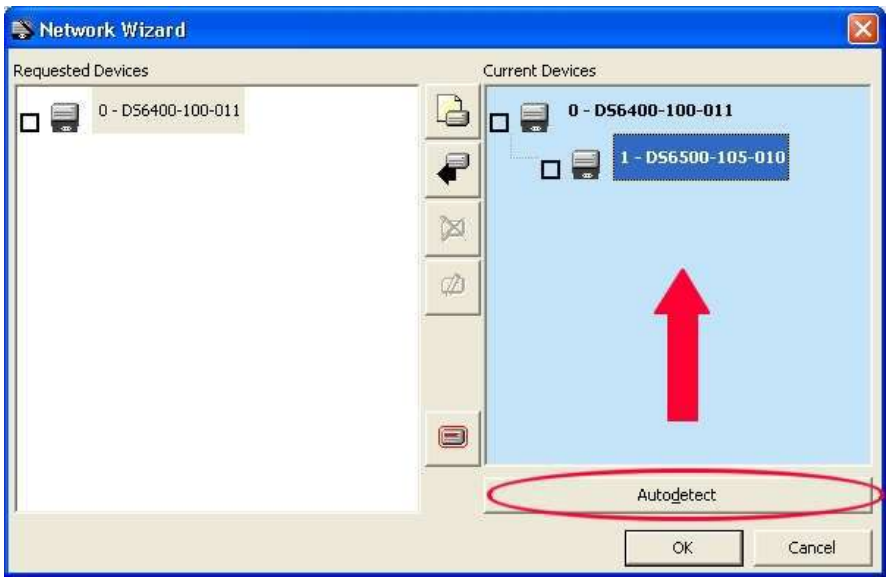

a. if the slave scanners have already been configured and wired to the network, click on the Autodetect button to start a polling procedure of the current network. All slave scanners found will be represented in the “Current Devices” area. Then, select the desired slave scanner from the “Current Devices” area and click on the icon (or drag and drop) to transfer it to the “Requested Devices” area where your network customization is defined. The following dialog box will appear allowing (if necessary) to change the slave address ("Available Device" field) and label ("Description" field):

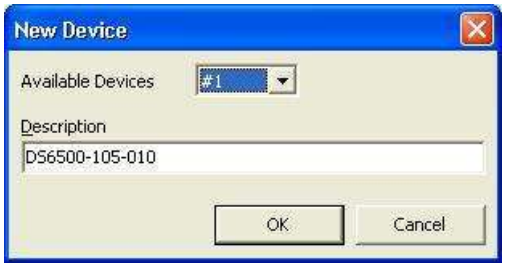

b. if the slave scanners have not been configured and wired to the network, click on the icon to add a new device defining its address and model. The added slave scanner will be displayed in the “Requested Devices” area. This option in any case requires that all slave scanners have their address set before the network can function.

2. If desired, select a slave scanner within the "Current Devices" area and click on the icon (or select the "Show Device" option from the right-click menu) to make the dialog box appear as follows:

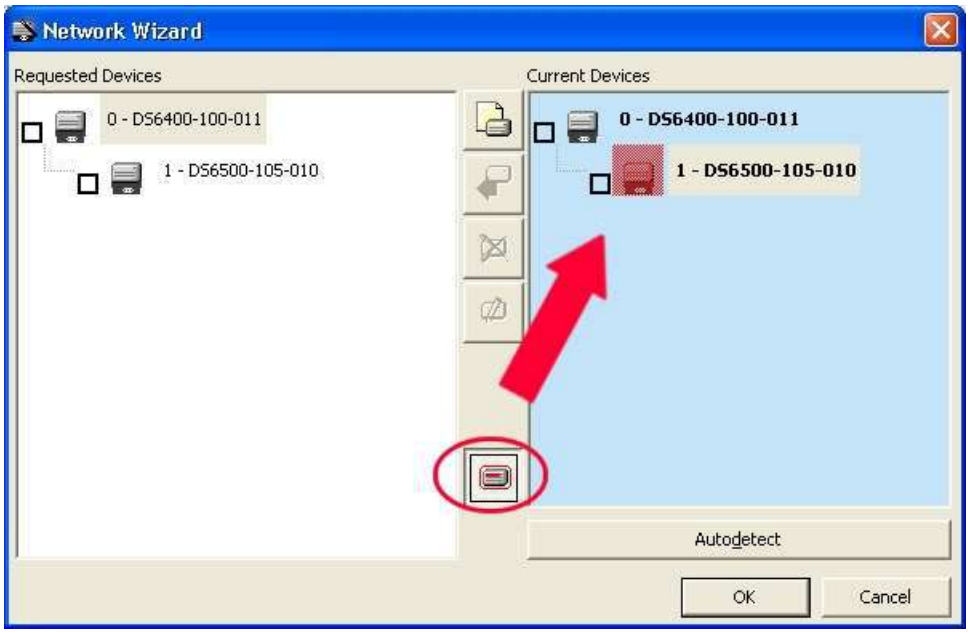

The "Show Device" option is particularly useful after the Net-Autoset procedure or whenever it is necessary to know which address is assigned to a specific slave scanner. Indeed, it activates the following signals which physically indicate the scanner corresponding to the one selected, in particular:

- in Network Wizard the icon corresponding to the selected slave scanner starts blinking red;
- in the Physical Network all slave scanner lasers turn off except the one of the selected scanner which turns on.

3. If desired, select the transferred/added slave scanner within the “Requested Devices” area and click on the icon to customize the scanner label and address.

4. Once your network has been customized, close the network wizard. Before closure, the program will show a dialog box asking whether to send the new configuration to the Master. Choose the “Yes” option to start this procedure.

8.2.3 Alternative Slave Address Assignment

As alternatives to Network Setup through the Master, each Slave scanner can be assigned an address through the following methods:

- address setting through the Local Device Network Settings item in the Device Menu with the slave scanner connected to Genius™

- manual address setting through slave scanner keyboard (see par. 1.6.1 for details)

8.3 ADVANCED GENIUS™ CONFIGURATION

The ADVANCED selection available when starting the Genius™ program is addressed to expert users being able to complete a detailed scanner configuration. By choosing this option it is possible either to start a new scanner configuration or to open and modify an old one. The desired parameters can be defined in the following window, similar to the MS Explorer:

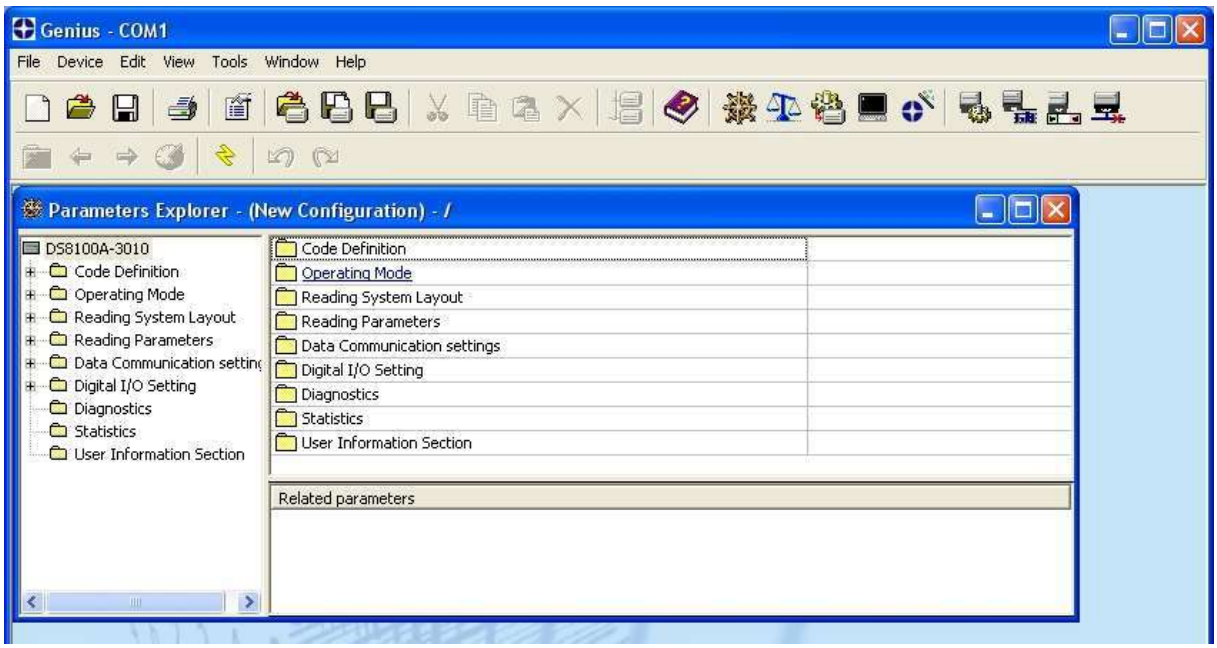

Figure 96 - Genius™ Parameter Explorer Window

The procedure for setting the scanner parameters is supported by a Help On-Line, which is displayed in an HTML browser. It can be selected from the Configuration Help option available in the Help menu. In addition, a context-sensitive help can be enabled by pressing the <F1> key after selecting the desired parameter.

8.3.1 Genius™ Shortcuts for Network Configuration

Once the Network Setup is structured in Genius and the Master is configured, there are a few shortcuts that Genius offers to quickly configure the slaves.

By right-clicking on a device in the "Devices" area a shortcut menu appears which allows you to:

- Copy the device configuration
- Paste a previously copied configuration
- Copy the Master device configuration parameters to all Slaves (only common parameters relative to Slave functioning, i.e. Code Definition, Diagnostics, etc.)
- Show Device to physically locate a scanner in the station

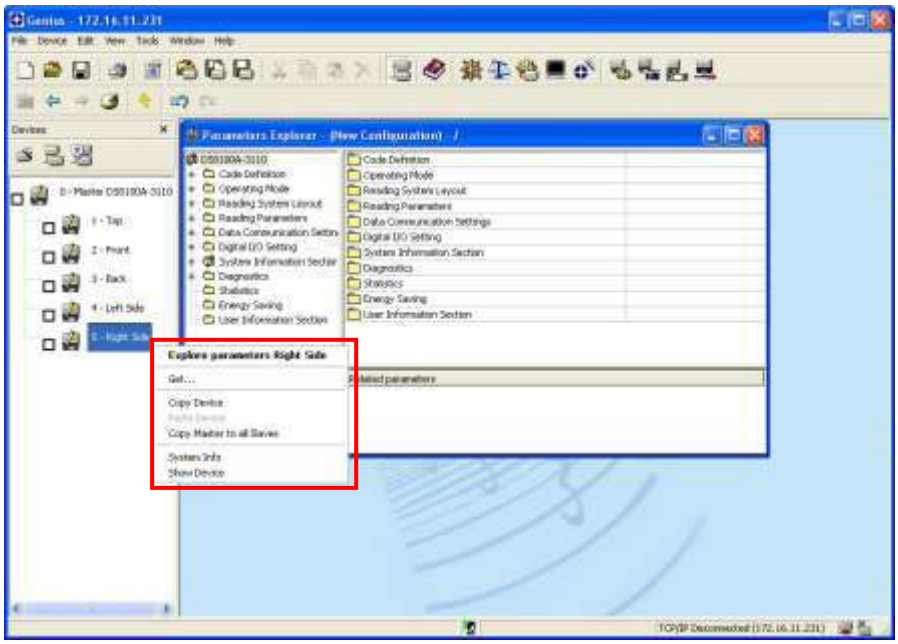

These shortcuts are made only in Genius™ and require sending the configurations to the scanners to be saved.

It is possible to Paste, Send or Load configurations simultaneously[1] to a selected number of devices by clicking the relative device check box and executing the desired command.

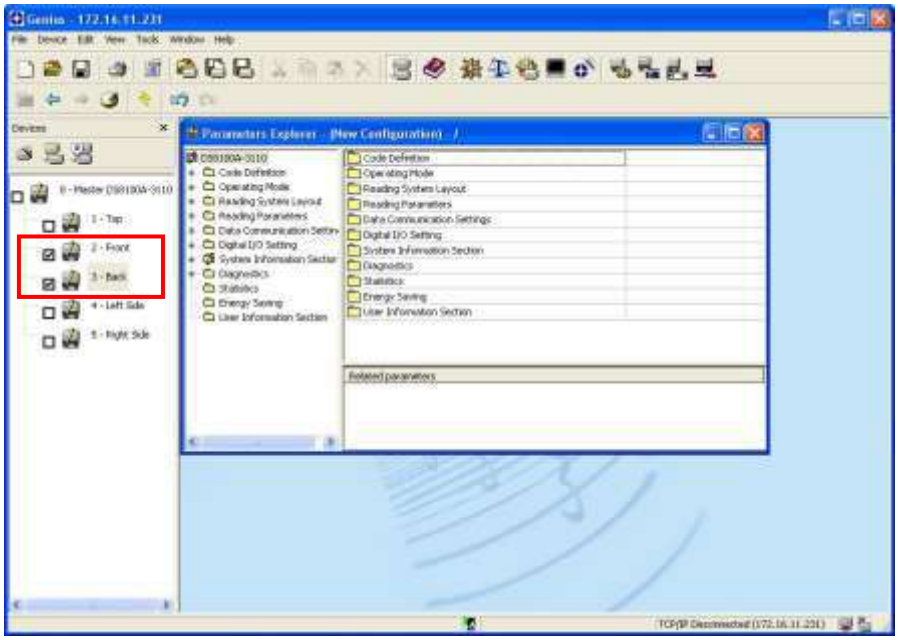

These same functions[2] can be selected from the Edit menu as well.

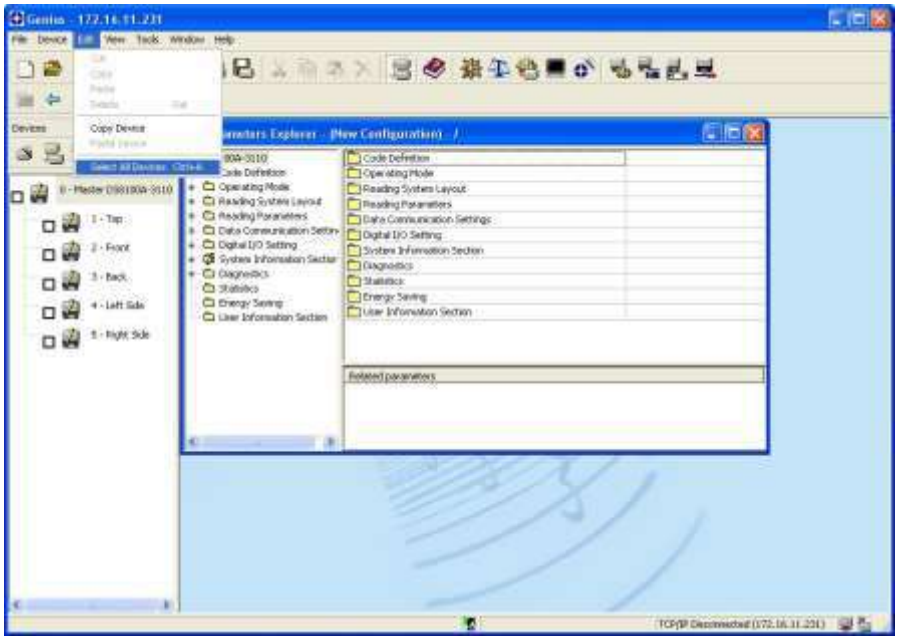

[1] Not for Master and Slaves simultaneously.

[2] Not for Master and Slaves simultaneously. If using the "Select All Devices" menu item, uncheck either the Master or all slaves.

8.4 PARAMETER DEFAULT VALUES

The following table contains the list of the factory default settings for the DS6400.
Genius™ also allows checking the parameter default values by selecting the "Compare parameters" option available in the Tools menu and comparing the current scanner configuration to the default one.

Parameter	Default Setting
Code Definition	
Code Combination	Single Label
No read Message	Global No Read Message
No Read String	<CAN>
Multiple Read Filters	Disabled (unchecked)
Code Label Settings #1	
Code Symbology	Interleaved 2 of 5
Label Length	8
Min Code Position	0
Max Code Position	255
Check Digit	Disabled (unchecked)
Decoding Safety	1
Decoding Severity	3
Match String Rule	Match
Pattern Match String	Empty
Match Direction Rule	Disable
Code Label Settings #2	
Code Symbology	Code 39
Label Length	Variable
Minimum Label Length	1
Maximum Label Length	60
Min Code Position	0
Max Code Position	255
Check Digit	Disabled (unchecked)
Decoding Safety	1
Decoding Severity	3
Match String Rule	Match
Pattern Match String	Empty
Match Direction Rule	Disable
Operating Modes	
Operating Mode Selection	On Line
On Line Options	On Line 1 Input
Start Input Number	1
Start Input Active Level	Active Closed
Reading Phase Timeout	Disabled (unchecked)
Verifier	Disabled (unchecked)
Reading System Layout	
Device Assignment	Alone
Modify&Backup Lon Slave Configuration	Disabled (unchecked)
Enable A.S.R.	Disabled (unchecked)

Parameter	Default Setting
Reading Parameters	
Beam Shutter	Disabled
Overflow Start Ratio	5
Overflow Stop Ratio	5
Reading Mode	Reconstruction
Reading Condition	Standard
Reconstruction Parameters	
Enabled Stacked Code	Disabled (unchecked)
Extended	
Min Match	0
Position Tolerance	50
Duration Tolerance	50
Min Start/Stop Number	2
Inter Char Gap	8
Addon Overflow Ratio	2
Scan Line Amplitude	
Amplitude Settings Enable	Disabled (unchecked)
Flash	
Flash Mode	Fixed
Fixed Distance	60
Data Communication Settings	
Host Application Protocol Type	Standard
Data Format	
Header TX Start	With data
Termination After No Read Message	Enabled (checked)
Message Tx Selection	On Decoding
Format Type	Standard
Max Tx Delay After Phase Off	Disabled
Code Identifier	Disabled
Parameters	
Header String	<STX>
Code Position	Disabled (unchecked)
Code Direction Identifier Enable	Disabled (unchecked)
Termination String	<CR><LF>
Data Packet Separators	<CR><LF>
Code Field Length Setting	Variable Length
Main Serial Port	
Data Tx	Enabled (checked)
Heartbeat	Disable
Parameters	
Main Port Communication Mode	Standard
Main Port Electrical Interface	RS232
Handshake	None
Baud Rate	9600
Parity	None
Data Bits	8

Parameter	Default Setting
Parameters	
Stop Bits	1
Auxiliary Serial Port	
Search for CBX BM100 at Device Startup	Enabled (checked)
Data Tx	Enabled (checked)
Heartbeat	Disable
Pass Through	Disabled (unchecked)
Parameters	
Baud Rate	115200
Parity	None
Data Bits	8
Stop Bits	1
Digital I/O Setting	
Digital Input Lines Setting	
Debouncing For Input 1, 3 and 4	5ms
Debouncing For Input 2	500 µs
Input 1 Active Level Overridden by Op. Mode	Active Closed
Input 2 Active Level Overridden by Op. Mode	Active Closed
Input 3 Active Level Overridden by Op. Mode	Active Closed
Input 4 Active Level Overridden by Op. Mode	Active Closed
Output 1	
Line State	Normally Open
Activation Event	Complete Read
Alternative Activation Event	Wrong
Deactivation Event	Timeout
Alternative Deactivation Event	None
Deactivation Timeout (ms)	50
Output 2	
Line State	Normally Open
Activation Event	No Read
Alternative Activation Event	Partial Read
Deactivation Event	Timeout
Alternative Deactivation Event	None
Deactivation Timeout (ms)	50
Output 3	
Line State	Normally Open
Activation Event	None
Alternative Activation Event	None
Deactivation Event	None
Alternative Deactivation Event	None

Parameter	Default Setting
Diagnostics	
PackTrack Debug Message Tx	Disabled (unchecked)
Enable	Checked
Conveyor Info	Not Available
Refresh Time	2 sec
Statistics	Enabled (checked)
Energy Saving	
Energy Saving Configuration	Disabled (unchecked)
User Information Section	
End User Name	Empty
Device Name	Empty
Line Name	Empty

9 READING FEATURES

9.1 DS6400 FLASH™ DYNAMIC FOCUS

The DS6400 has an innovative linear motor designed to control the focus position of the scanner via software. This dynamic system, called **FLASH™**, is able to move the focus position rail to rail, from the minimum position to the maximum position.

The FLASH™ functionalities are programmed via the Genius™ tool (refer to the Genius™ Help On-Line for details) and can operate in the following modes:

- Fixed Mode
- Continuous Mode
- Triggered Mode
- D-Flash™ Mode

9.1.1 Fixed Mode

In Fixed mode, the focus is set to the desired position via software (expressed in cm). This mode represents the basic Flash™ function, in which the focus is adjusted in software for a given installation and its position is stored in the scanner decoder. This function is similar to the focus adjustment available for the DS6300 scanner with the great difference that the adjustment is performed via software through the Genius™ tool and not through the physical adjustment of an external screw.

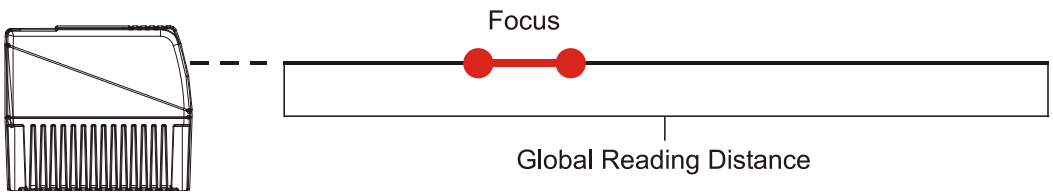

Figure 97 – Flash™ Fixed Mode

9.1.2 Continuous Mode

In Continuous mode, the focus position is continuously moving from a minimum position to a maximum position with a defined frequency (f1 in the figure below). This Flash™ function allows exploiting the whole reading range of the current DS6400 when the object to be detected is large and slow moving. Typical examples of applications for the Continuous mode are front side reading of big pallets, or reading on a fork lift truck.

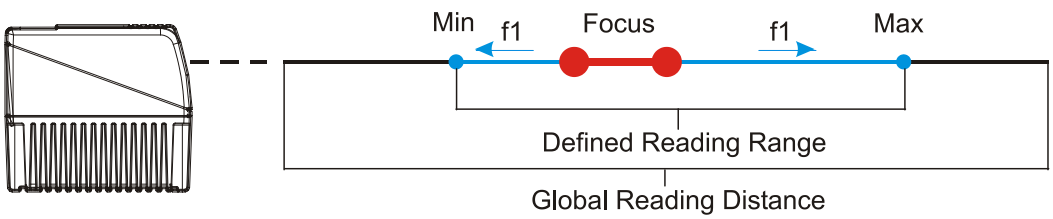

Figure 98 – Flash™ Continuous Mode

9.1.3 Triggered Mode

In Triggered mode, the focus position can be set depending on the received external input (photocell, barrier, serial message…). This mode represents the most traditional Flash™ function, since it requires photocells, barriers or a dedicated interface to the Host (PC or PLC).

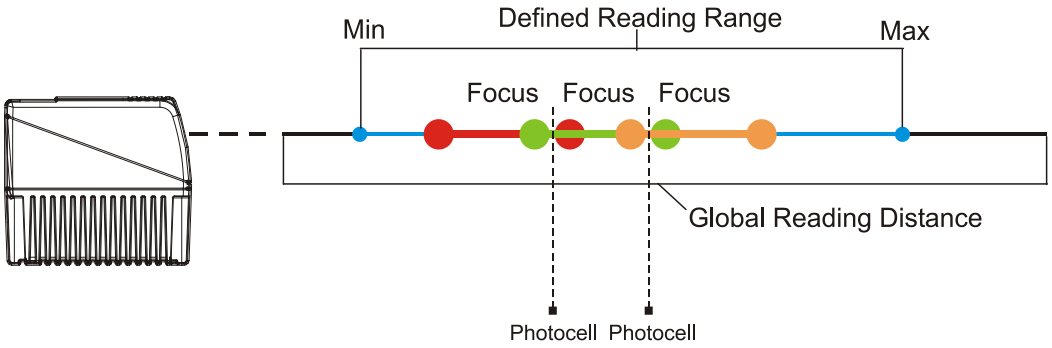

Figure 99 – Flash™ Triggered Mode

9.1.4 D-FLASH™ Mode

In D-Flash™ mode, the focus position can be set depending on the measured distance (Dn in the figure below) between the scanner and the scanned object. This is the most innovative and flexible function, that makes different software implementations possible. The D-Flash™ development has been based on the minimum distance detected. Thus, it can apply to the widest variety of applications. Further developments of D-Flash™ will be provided according to the specific application needs.

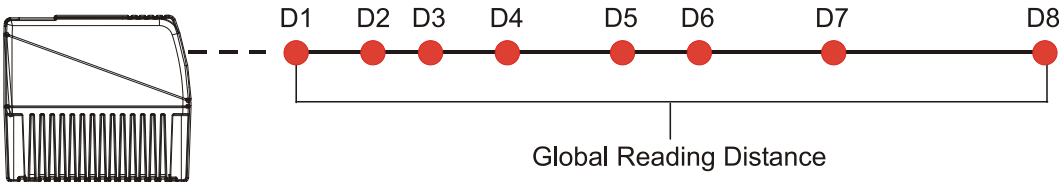

Figure 100 – Flash™ D-Flash™ Mode

9.2 ADVANCED CODE RECONSTRUCTION (ACR™ 4)

The traditional way of barcode reading could be called “Linear Reading”. In this case, the laser beam crosses the barcode symbol from its beginning to its end as shown in the following figure:

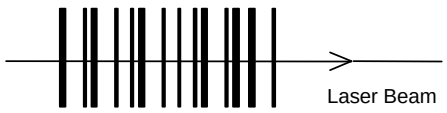

Figure 101 – Linear Reading

In Advanced Code Reconstruction mode it is no longer necessary for the laser beam to cross the label from the start to the end. With just a set of partial scans on the label (obtained using the motion of the label itself), the DS6400 is able to “reconstruct” the barcode. A typical set of partial scans is shown in the figure below:

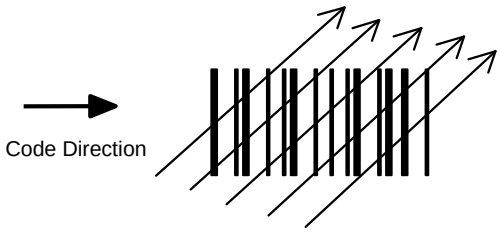

Figure 102 – Partial Scans

None of the partial scans contains the whole label. The decoder aligns each partial scan correctly and combines them in order to obtain the entire code.

This alignment is performed by calculating the time difference from one partial scan to another using a reference code element.

9.2.1 Tilt Angle for Advanced Code Reconstruction

The most important parameter in Advanced Code Reconstruction is the value of the maximum tilt angle (α maximum) under which the code reconstruction process is still possible.

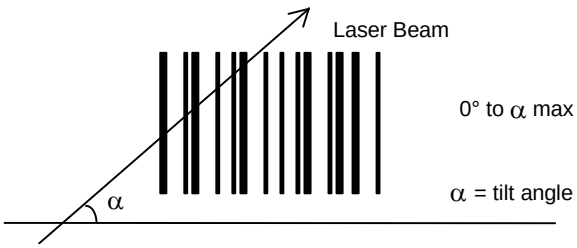

Figure 103 – Tilt Angle

The decoder will be able to read the label with a tilt angle between + α max and - α max as shown in the following figure:

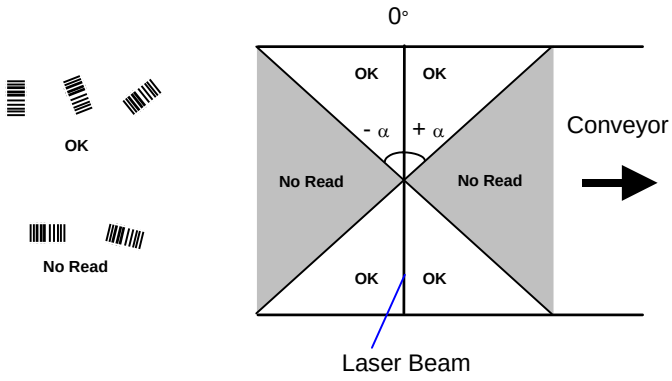

Figure 104 – Reading Zones with α Max

9.3 PACKTRACK™

PackTrack™ is a patented operating mode for Datalogic Omni-Directional Reading Stations used to correctly assign codes read on different packs when placed in the scanner Reading Area at the same time.

In fact, in the following example, the codes of two or more consecutive packs are found at the same time in the scanner reading area. Therefore, the condition occurs where, in the sequence of the two packs, the code of the second pack is read first, just before the code of the previous pack. A system without PackTrack™ would assign the code of the second pack to first pack and vice versa, thus causing a gross error in sortation.

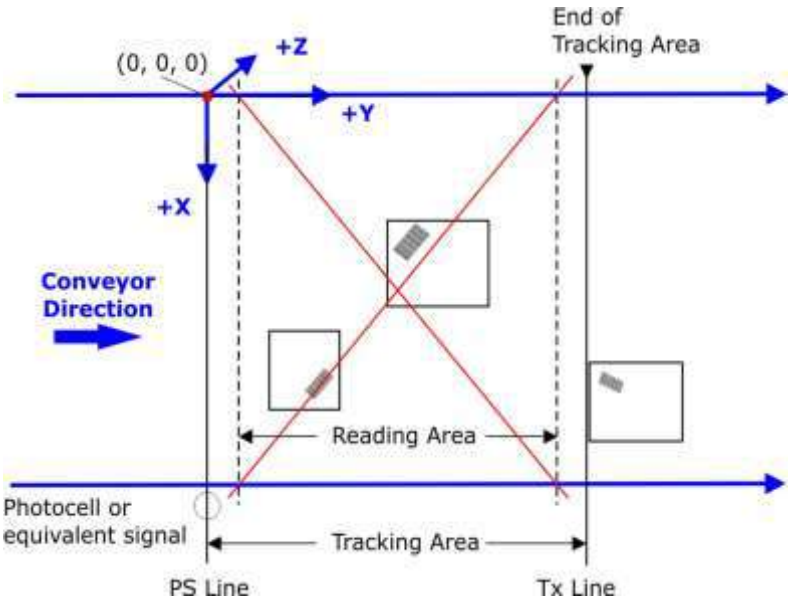

Figure 105 – PackTrack™ System Layout

Working in PackTrack™ mode requires an encoder and a presence sensor (or equivalent signals) to track the moving packs.

For correct functioning, the PackTrack™ operating mode requires a calibration just after the installation of the scanners. This operation is absolutely necessary to accurately locate barcodes on a fixed reference system.

PackTrack™ uses a right-handed reference system (right hand with thumb = X axis; forefinger = Y axis; middle finger = Z axis) where the X axis coincides with the PS line, the Y axis coincides with the conveyor direction and the Z axis is oriented upwards from the conveyor (see figure below).

PackTrack™ Reference System

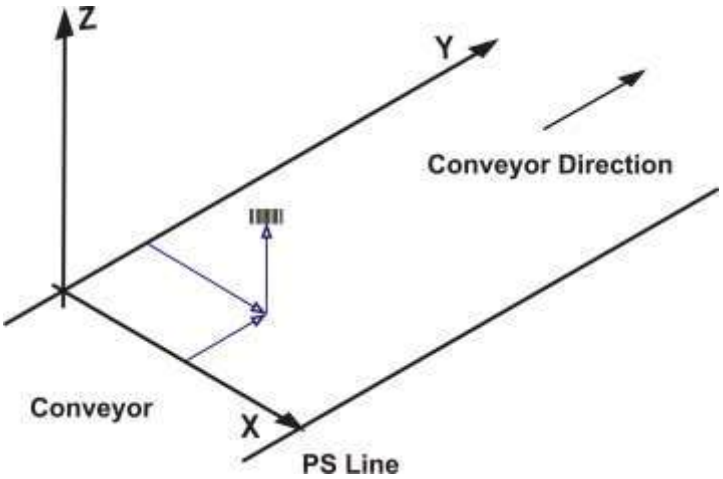

Figure 106 – PackTrack™ Reference System

This coordinate system is absolute for the reading station, i.e. is valid for all the scanners independently from their position or orientation with respect to the conveyor. For this reason, after the PackTrack™ calibration (and configuration) has been correctly performed, when a barcode is under the beam to be read by the scanners, its position is defined by the coordinates of its central point, independently from which scanner is reading it. This can be verified using the Test mode in the SPY PackTrack Calibration dialog box (see par. 9.3.2).

Both Auto PackTrack Calibration using the DLAPC tool and Manual PackTrack™ Calibration using the SPY tool can be performed in Genius™ (refer to the following paragraphs and the Genius™ Help On-Line for details).

9.3.1 Auto PackTrack™ Calibration for Reading Station Using DLAPC

In a Master /Slave Reading Station working in PackTrack™ or Continuous operating mode, the entire Reading Station can be automatically calibrated using the DLAPC tool in Genius™. The following paragraphs detail the Conditions and Limits, Parameters, and Procedure to follow. This information is also given in the Help On-Line.

Auto PackTrack Conditions and Limits

The Conditions and Limits for Auto PackTrack Calibration are summarized here for convenience and are also integrated into the following procedure descriptions:

- The following scanners are supported by Auto PackTrack Calibration: DS6400 (*see note below), DX6400 (*see note below), DS8100A, DX8200A.
- Before performing the Auto PackTrack Calibration procedure, if a system reset or power reset is performed, wait for all the scanners to be available (up to 60 sec.) before proceeding.
- Operating Mode of the Master must be either PackTrack or Continuous.
- Code 128 codes must be enabled on the Master with Label Length set to variable.
- If the system Presence Sensor and Encoder are used, the correct Encoder Step value must be set on the Master and the Presence Sensor must be connected to the CBX100/500 Input 1.
- If instead the PPA-8000 Photocell Array is used, it must be connected to the CBX100/500 I1 and I2 inputs, **the following parameters must be disabled on the Master**: Physical Encoder for PackTrack or Use Encoder for Continuous, **and the Encoder, if present, must be physically disconnected**.
- DX scanners which are calibrated automatically cannot be automatically replaced by DX scanners with a previous sw version (earlier than 6.80). You must either update the old scanner software prior to substitution, or complete the calibration manually, after installation, by setting the PSOffset and Direction parameters.

NOTE	*The autofocus feature of DS6400 and DX6400 scanners makes Auto PackTrack Calibration difficult, therefore to assure that the procedure can correctly calibrate these scanners, it is necessary to set a fixed focus value which allows the scanner to read all the label positions useful for its calibration.*

Auto PackTrack Parameter Descriptions

By means of the software tool DLAPC, it is possible to perform the Auto PackTrack setup procedure for PackTrack™ and Continuous Operating Mode applications.

Select the "DLAPC" option from the Tools menu or click on the related icon on the Tool Bar to open the following dialog box:

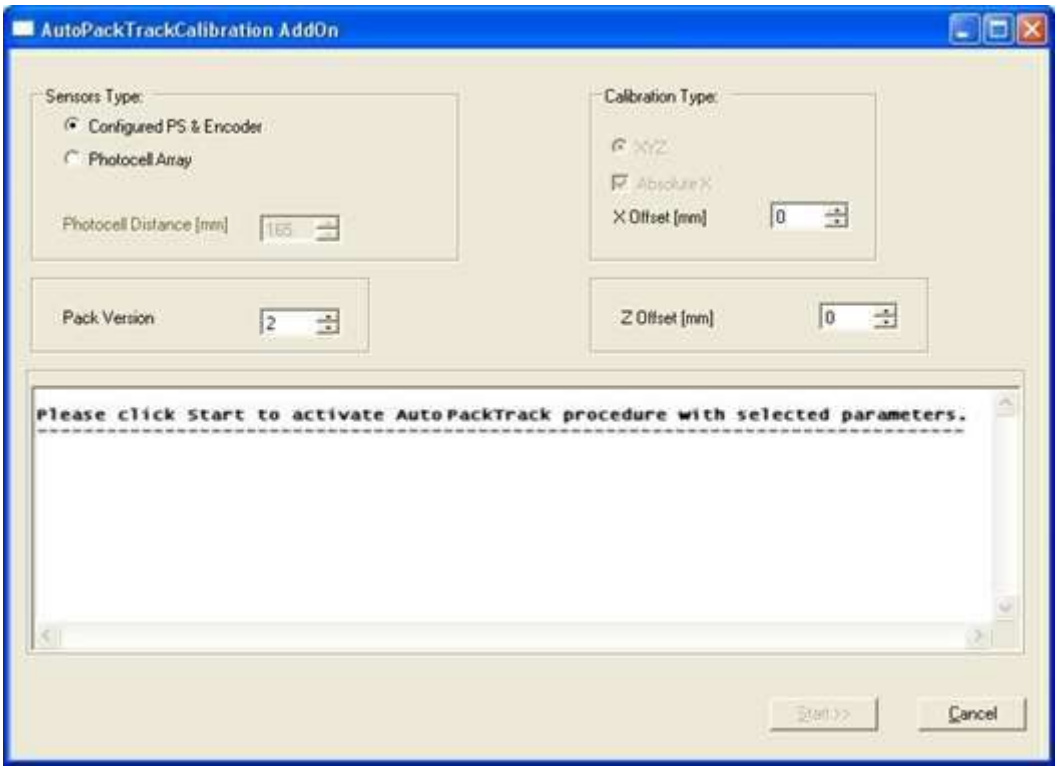

Once the DLAPC window has been opened, set the following parameters according to the application requirements:

Sensor Type: whether calibration will be performed using the system Presence Sensor and Encoder (most cases), or the PPA-8000 Photocell Array.

NOTE	*The Auto PackTrack procedure **requires** using the PPA-8000 Photocell Array for all systems where either the Presence Sensor or the Encoder are absent (including Continuous Operating Mode and Cargoscan applications).*

If using the Presence Sensor and Encoder, the presence sensor must be connected to the CBX100/500 I1 input. The Encoder Step parameter must also be set correctly.

If using the PPA-8000 you must set the Photocell distance (165 mm default). The Photocell Array must be connected to the CBX100/500 I1 and I2 inputs (see the relative installation manual), **and the Encoder, if present, must be disconnected**.

Pack Version: the version of the PCT-8000 being used for calibration. This value can be read from the barcode labels on the PCT-8000. Each label has the value *vnnn* where *v* is the version number.

Calibration Type: XYZ calibration with Absolute X position is forced. The coordinates for the three axes are calibrated. The X coordinate for all slaves is relative to a precise point (reference point). This requires that the X Offset be set which will be used to harmonize the X=0 coordinate of all of the individual slaves.

NOTE

For Oscillating Mirror models the scan line must be parallel to the conveyor direction and only the Y calibration will be performed, (the X and Z axes will automatically be set to zero).

Z Offset (if necessary): for packs that are elevated above the conveyor surface (for example on tilt trays), this parameter sets an offset for the height of a pack so that Z = 0 corresponds to the bottom of the pack.

Auto PackTrack Setup

1. Click on the Start button and follow the instructions given in the Auto PackTrack procedure window.

   The first message is sent to the slaves and their status is shown in the synoptic buttons at the top of the window.

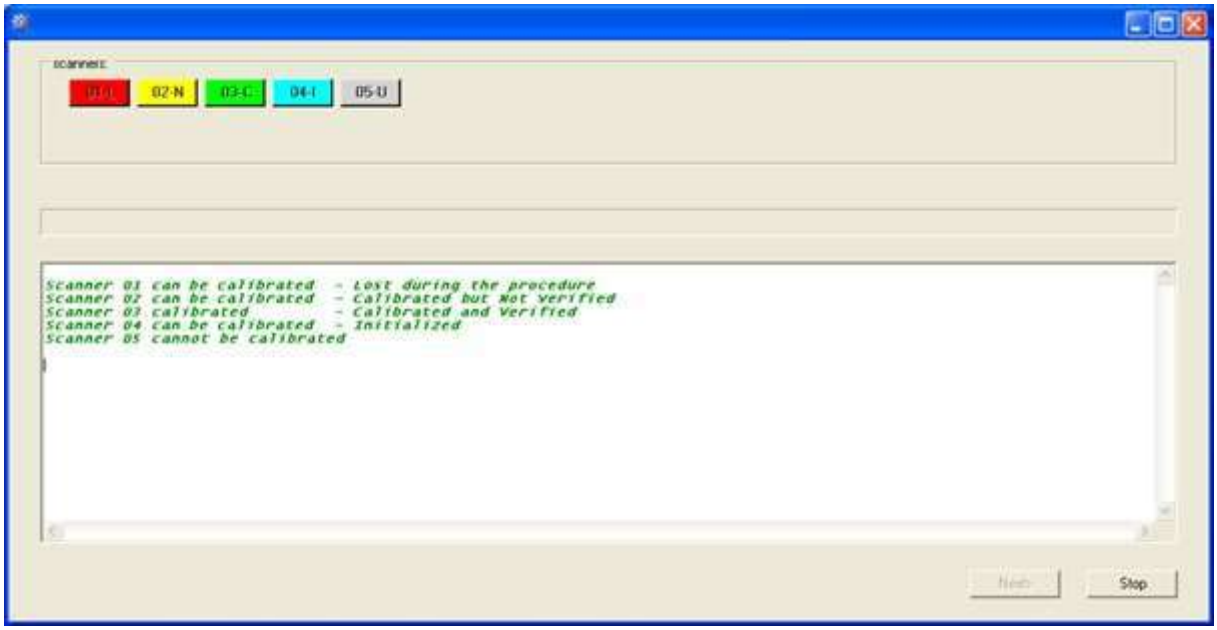

   The scanner status indicated by each synoptic button has the following convention:

Color	Symbol	Meaning
Grey	**xx-U**	slave xx cannot be calibrated - calibration is not supported by scanner software version
Red	**xx-U**	slave xx can be calibrated but the calibration procedure fails either barcode reading or verification
Red	**xx-L**	slave xx can be calibrated - is Lost stops responding during the procedure
Aqua	**xx-I**	slave xx can be calibrated - is in the Initial state ready to be calibrated
Yellow	**xx-N**	slave xx can be calibrated - is calibrated but Not verified
Green	**xx-C**	slave xx calibrated - is calibrated and verified

   The symbol **xx** is the number of the slave scanner **01, 02, 03** etc., independently from the selection in the *System Information Section>User Interface Style* configuration parameter in Genius.

2. Follow each step given in the Auto PackTrack procedure window. The instructions and summary of each step are written in the terminal area of the window. The Synoptic buttons report the slave scanner status throughout the procedure.

   Basically, place the PCT-8000 onto the moving conveyor, before the PS Line (reference point) and parallel to a conveyor edge (i.e. right-hand edge) with its arrow in the same direction as the conveyor movement. Let it pass through the reading station.

NOTE	*If there are any nodes that show as **U** or **L**, then you should Stop the procedure and correct the problem. If the nodes respond with **I**, **N**, or **C** then you can Continue with the procedure.*

To run each instruction press the Next button. The procedure repeats the steps asking to change the PCT-8000 X position (i.e. always before the PS Line (reference point) and parallel to a conveyor edge but changing to the left-hand edge and/or to the center of the conveyor), until the procedure terminates. At the end of the procedure, only the Stop button is active. Typically 3 passes are necessary.

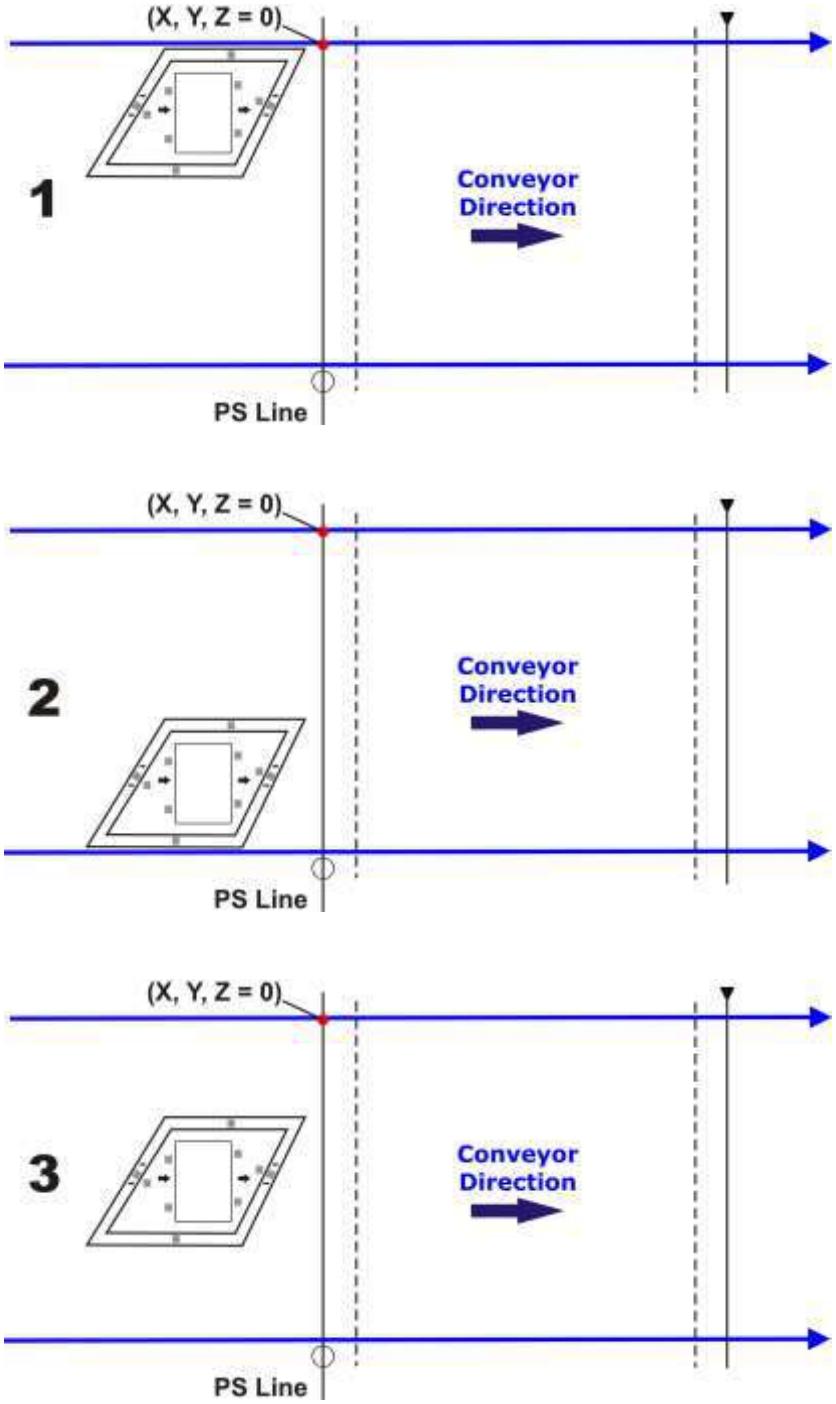

3. The Absolute X coordinate requires placing a barcode label **centered** onto the physical X position (X Offset) on the conveyor (previously set in the dialog box), you have 2 minutes to read the code before the procedure ends automatically.

NOTE	*Be careful that the barcode is not accidentally read in the act of placing it at the desired X Offset position, and assure that **it is read by only one scanner** (see the figure below). You may have to pass your hand or other opaque object over it in order to end this step.*

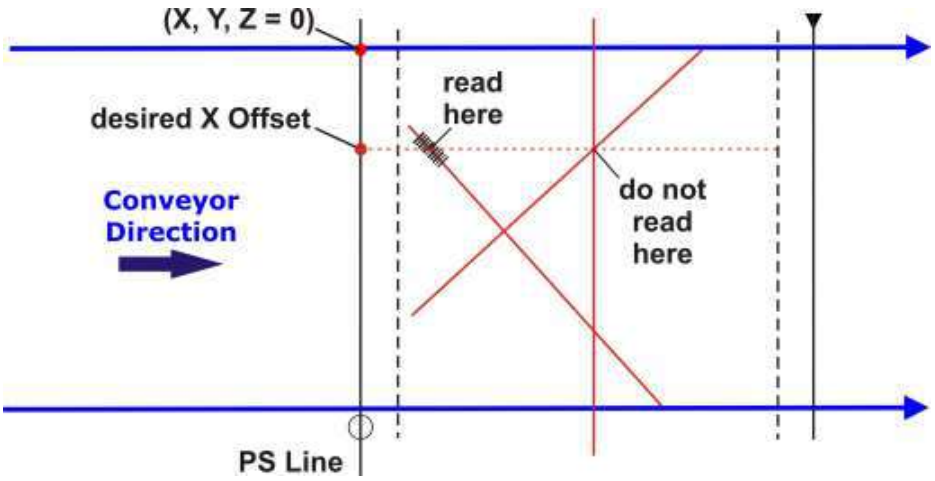

4. When you have successfully completed the procedure, (all scanners are green), press the Stop button to end the procedure and return to the Auto PackTrack setup window.

NOTE	*The Stop button is always present and can be used at any time to end the procedure and return to the Auto PackTrack setup window.*

NOTE	*At this point you can download the Auto PackTrack Report file saved in the Master scanner RAM. This can only be done by connecting the Master to another instance of Genius™ on a different communication channel. Select the Tools>File transfer... menu from this new Genius™ connection.*

5. From the original Genius™ connection, press the Exit button to exit the Addon.

   The calibrated values for the reading station will be sent to the Master scanner and the Master scanner will reset the reading station which is now calibrated and ready.

Auto PackTrack Report

The Auto PackTrack Report file can be downloaded from the Master scanner RAM by using the *Tools>File transfer…* menu in Genius™. The report is divided into three sections.

The first section contains the general calibration parameters:

```
---------------------------------------
PARAMETERS
---------------------------------------
Calibration type        XYZ X Absolute (X Offset 550)
Sensor type             configured
Pack version            2 (Z Offset 0)
```

The second section contains for each node, the calibration table, and the final calibration state.

```
---------------------------------------
PACKTRACK GLOBAL CALIBRATION TABLE DX node 5
---------------------------------------
P1: X(mm)               36
P1: Y(mm)               1077
P1: Z(mm)               10
P1: Distance(mm)        36
P1: Position            1077
P2: X(mm)               715
P2: Y(mm)               1096
P2: Z(mm)               10
P2: Distance(mm)        10
P2: Position            715
P3: X(mm)               518
P3: Y(mm)               1304
P3: Z(mm)               650
P3: Distance(mm)        1096
P3: Position            10
XP1: X(mm)              36
XP1: Y(mm)              1077
XP1: Z(mm)              10
XP1: Distance(mm)       36
XP1: Position           1077
XP2: X(mm)              715
XP2: Y(mm)              1096
XP2: Z(mm)              10
XP2: Distance(mm)       10
XP2: Position           715
XP3: X(mm)              518
XP3: Y(mm)              1304
XP3: Z(mm)              650
XP3: Distance(mm)       1096
XP3: Position           10
Calibration State       VERIFIED

---------------------------------------
PACKTRACK CALIBRATION TABLE DS node 6
---------------------------------------
P1: X(mm)               36
P1: Y(mm)               1077
P1: Z(mm)               10
P1: Distance(mm)        36
P1: Position            1077
P2: X(mm)               715
P2: Y(mm)               1096
P2: Z(mm)               10
P2: Distance(mm)        10
P2: Position            715
P3: X(mm)               518
P3: Y(mm)               1304
P3: Z(mm)               650
P3: Distance(mm)        1096
P3: Position            10
Calibration State       VERIFIED
```

The last section summarizes the calibration status of each scanner.

```
---------------------------------------
SCANNERS STATE SUMMARY
---------------------------------------
Scanner E                    Calibrated and verified
Scanner F                    Calibrated and verified
Scanner J                    Calibrated and verified
Scanner K                    Calibrated and verified
Scanner L                    Calibrated and verified
Scanner M                    Calibrated and verified
Scanner N                    Calibrated and verified
Scanner O                    Calibrated and verified
Scanner Q                    Calibrated and verified
Scanner R                    Calibrated and verified
Scanner S                    Calibrated and verified
```

9.3.2 Manual PackTrack™ Calibration for DS6400 Scanner Using SPY

In a Master /Slave Reading Station working in PackTrack™ or Continuous operating mode, the individual scanners can be calibrated using the SPY tool in Genius™.

PackTrack™ Reference System

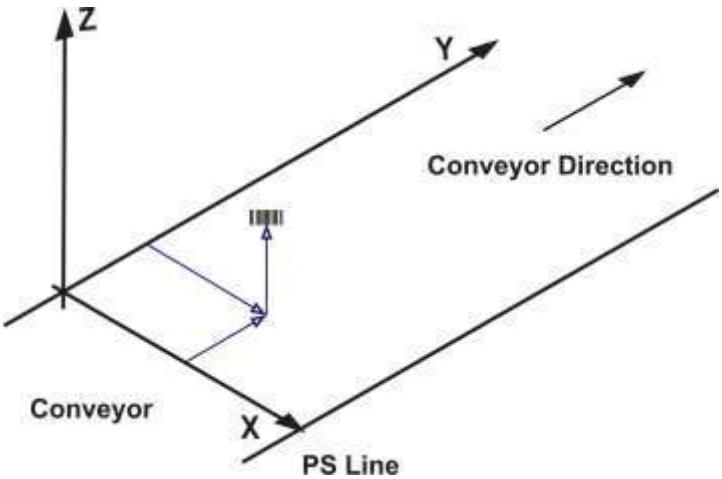

Figure 107 – PackTrack™ Reference System

Independently from the scanner position in the reading station (top, side, bottom, etc), the general procedure is to place three barcodes along the scanline of the scanner as indicated in the figure below. The order is not important <u>but the relative position to the scanner reading area is</u>: one barcode in the center near position and two barcodes at the outer edges of the reading area.

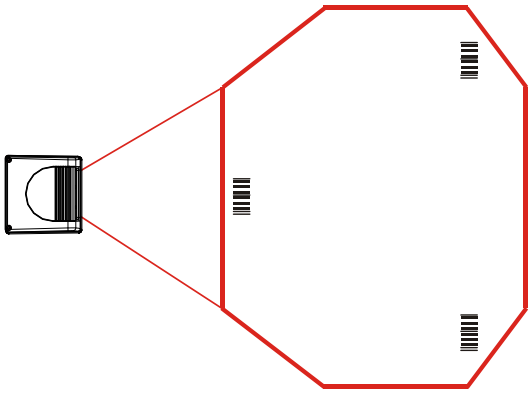

Figure 108 – Manual PackTrack™ Calibration Relative Code Positioning

1. Select the “SPY” option from the Tools menu or click on the related icon on the Genius™ toolbar to open the following dialog box:

NOTE

When selecting a slave scanner through the Master, click on the slave in the Devices window, then click the SPY icon.

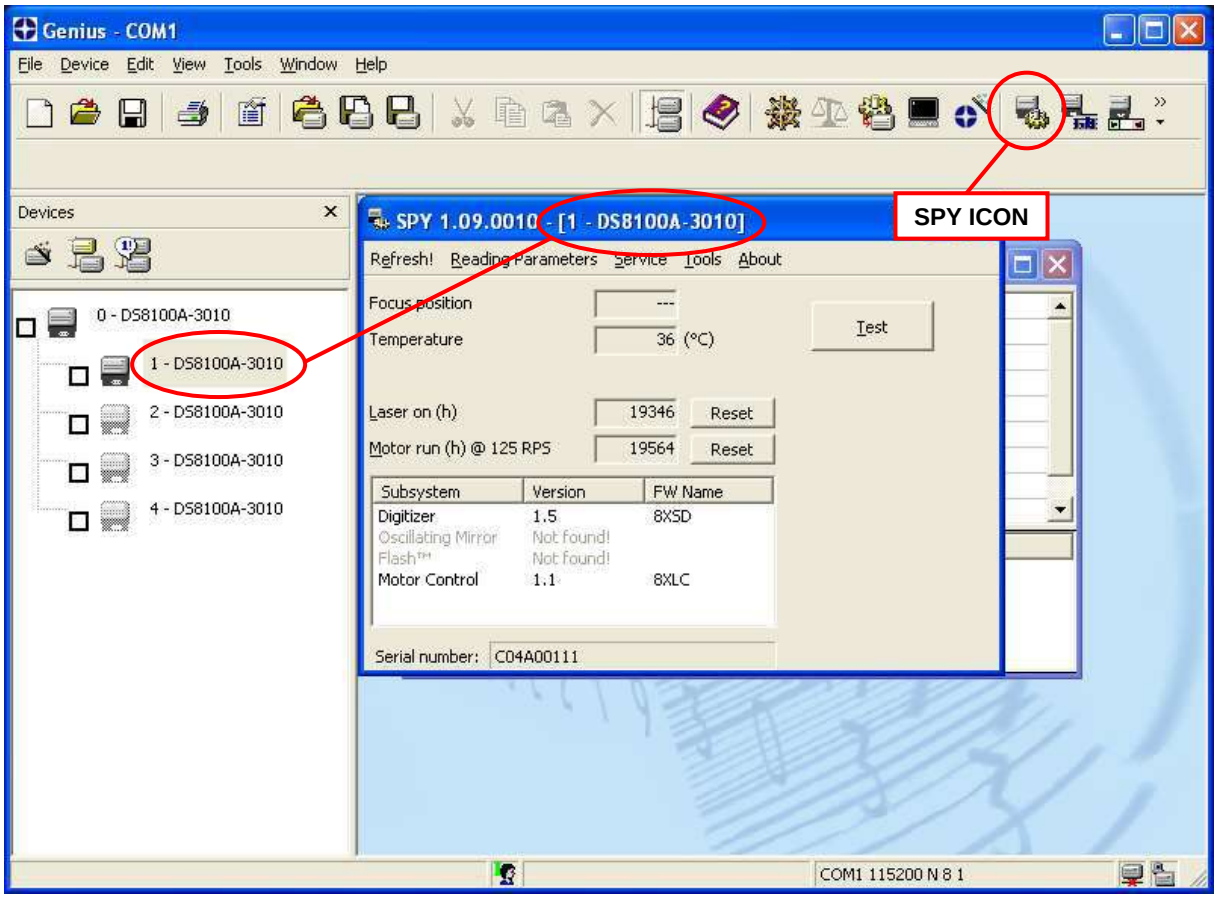

Figure 109 – Opening the Spy Window

2. Once the Spy window has been opened, select the “PackTrack™ Calibration” option from the Tools menu:

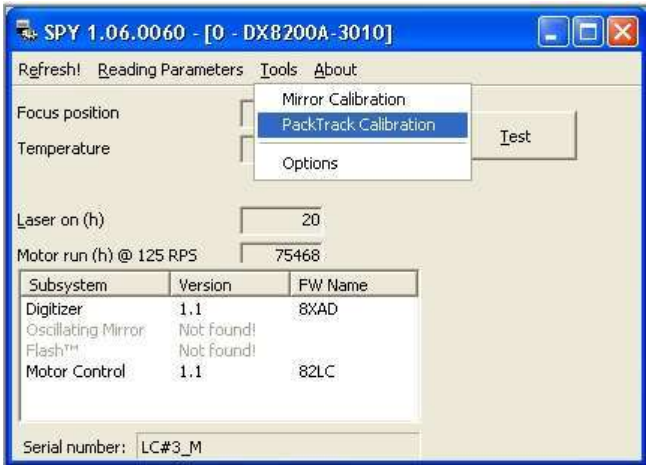

Figure 110 – Selecting PackTrack™ Calibration Option

3. By selecting the “PackTrack Calibration” option a further dialog box appears allowing to start calibration:

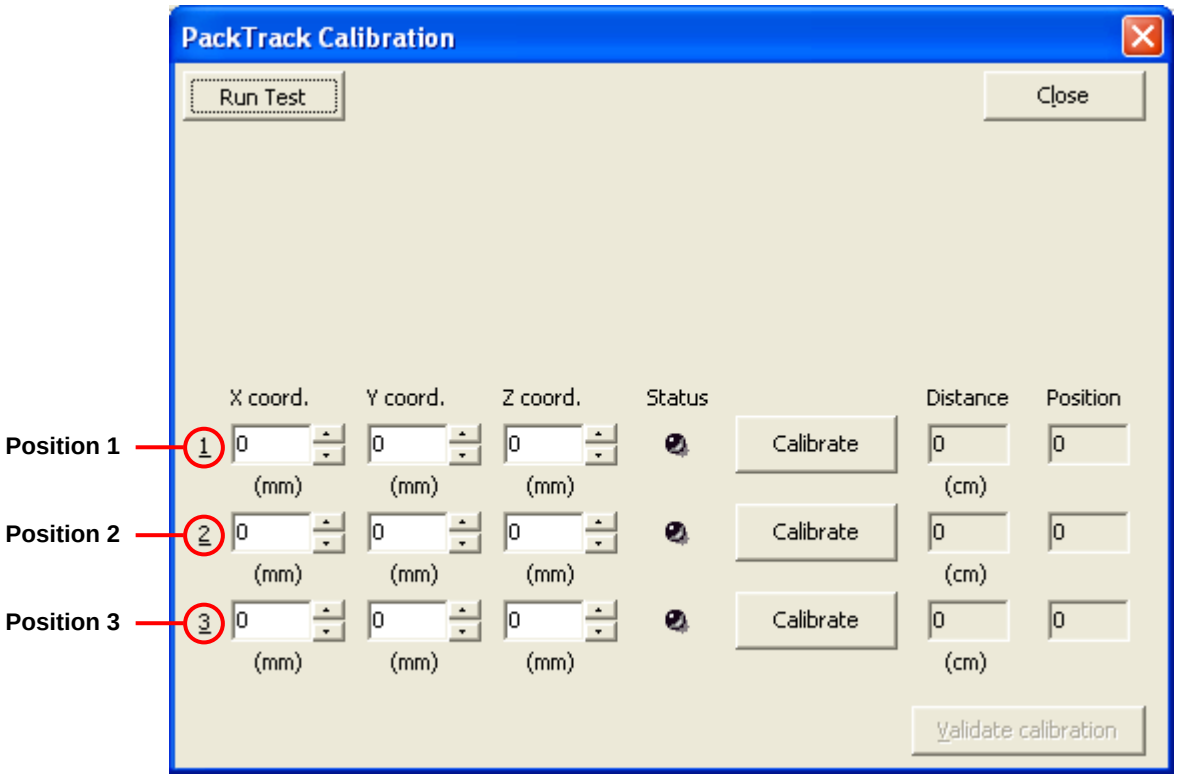

Figure 111 – Performing the PackTrack™ Calibration

4. Place the code at one of the desired positions on the scan line (i.e. Position 1).

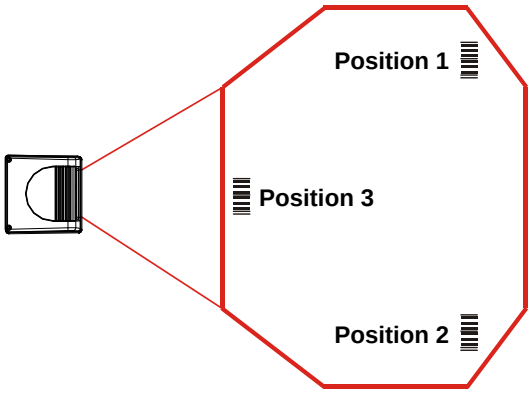

5. Measure the X, Y and Z coordinates relative to the **center** of the code and enter them into the corresponding edit boxes.

NOTE	*In the vast majority of systems the x and z data are not necessary. For these cases set x = 0, z= 0 during the calibration procedure.*

6. Press the Calibrate button for Position 1 to start the calibration.

7. Repeat the same procedure for Position 2 and Position 3.

8. After calibrating the 3 positions, press the “Validate Calibration” button to validate the calibration settings.

Before closing the dialog box, press the **Run Test** button to test the calibration results and efficiency. See the following figure.

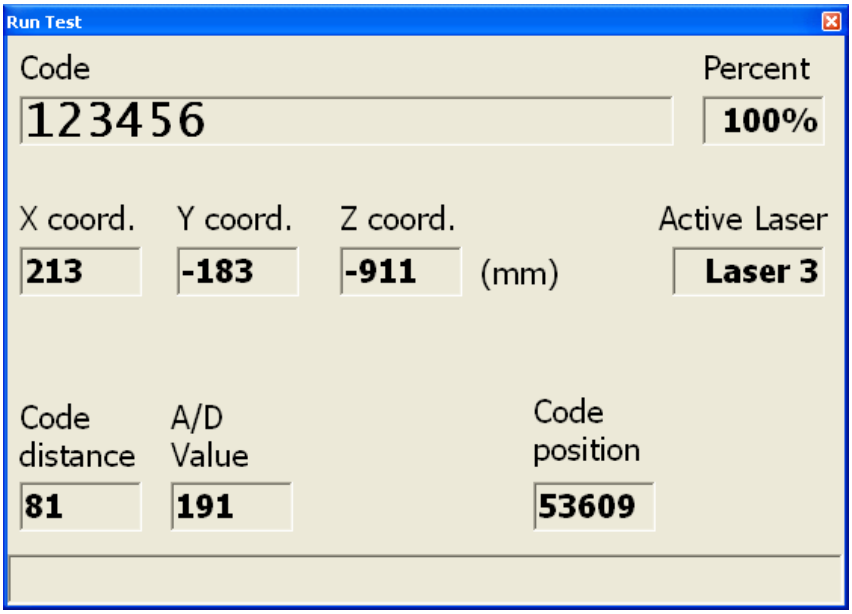

Figure 112 – Testing PackTrack™ Calibration

Repeat the entire procedure for each scanner in the Reading Station.

9.3.3 PackTrack™ Calibration for DS6400 Oscillating Mirror Models

The DS6400 oscillating mirror models can be used in PackTrack™ operating mode only when the scanner is mounted so that the scan line is parallel to the conveyor direction as shown in the following figure:

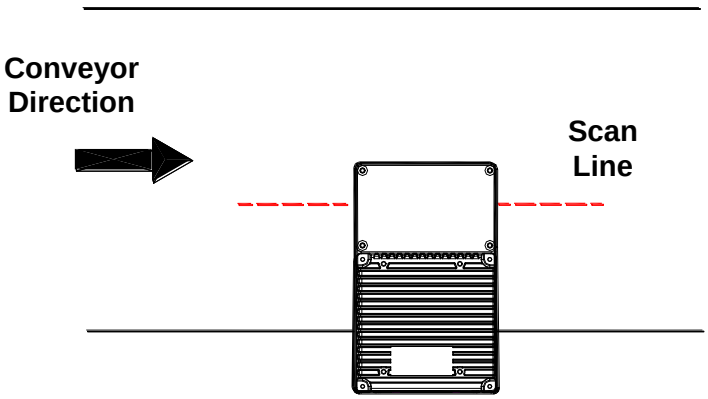

Figure 113 – Oscillating Mirror Models in PackTrack™ Mode

PackTrack™ Calibration must be made while the scanning plane is perpendicular to the conveyor plane and fixed (not oscillating).

9.4 PERFORMANCE

The scan rate is 800 scans/sec.

Refer to the diagrams in par. 9.5 for further details on the reading features. These diagrams are taken on various resolution sample codes at a 25 °C ambient temperature depending on the conditions listed under each diagram.

If standard models do not satisfy specific requirements, contact your nearest Datalogic distributor, supplying code samples, to obtain complete information on the reading possibilities.

9.4.1 Reading Conditions

- ANSI Grade B minimum
- 800 scans/sec

The following tables describe the requirements for standard applications.

		Minimum Code Height for ACR Reading (mm)											
		45°						30°					
Conveyor Speed (m/s)		**0.5**	**1**	**1.5**	**2**	**2.5**	**3**	**0.5**	**1**	**1.5**	**2**	**2.5**	**3**
2/5 Interleaved Code Resolution (mm)	**0.25**	10	12	14	16	18	20	7	9	10	12	13	15
	0.30	12	14	15	17	19	21	8	9	11	12	14	15
	0.33	13	14	16	18	20	22	8	10	11	13	14	16
	0.38	14	16	18	19	21	23	9	11	12	14	15	17
	0.50	18	19	21	23	25	26	11	12	14	15	17	18
	0.72	24	25	27	28	30	32	15	16	17	19	20	22
	1.00	33	34	35	36	38	40	20	21	22	23	25	26

Ratio 3:1

Table 1

		Minimum Code Height for ACR Reading (mm)											
		45°						30°					
Conveyor Speed (m/s)		**0.5**	**1**	**1.5**	**2**	**2.5**	**3**	**0.5**	**1**	**1.5**	**2**	**2.5**	**3**
Code 39 Code Resolution (mm)	**0.25**	9	10	12	14	16	17	6	7	9	10	12	13
	0.30	10	11	13	15	17	18	7	8	9	11	12	14
	0.33	11	12	13	15	17	19	7	8	10	11	13	14
	0.38	12	13	14	16	18	20	8	9	10	12	13	15
	0.50	15	16	17	18	20	22	10	10	11	13	14	16
	0.72	20	21	22	23	24	26	13	13	14	15	17	18
	1.00	27	28	29	30	31	32	17	17	18	19	20	21

Ratio 3:1; Interdigit = Module Size

Table 2

		Minimum Code Height for ACR Reading (mm)											
		45°						30°					
Conveyor Speed (m/s)		**0.5**	**1**	**1.5**	**2**	**2.5**	**3**	**0.5**	**1**	**1.5**	**2**	**2.5**	**3**
Code 128 – GS1-128 Code Resolution (mm)	**0.25**	8	9	11	13	15	17	5	7	8	10	11	13
	0.30	8	10	12	14	16	18	6	7	9	10	12	13
	0.33	9	11	13	14	16	18	6	8	9	11	12	14
	0.38	10	11	13	15	17	19	7	8	10	11	13	14
	0.50	12	13	15	17	19	21	8	9	11	12	14	15
	0.72	16	17	19	21	22	24	10	11	13	14	16	17
	1.00	22	23	24	25	27	29	13	14	15	17	18	20

Table 3

		Minimum Code Height for ACR Reading (mm)											
		45°						30°					
Conveyor Speed (m/s)		**0.5**	**1**	**1.5**	**2**	**2.5**	**3**	**0.5**	**1**	**1.5**	**2**	**2.5**	**3**
Codabar Code Resolution (mm)	**0.25**	8	9	11	13	15	17	5	7	8	10	11	13
	0.30	9	10	12	14	16	18	6	7	9	10	12	13
	0.33	9	11	13	14	16	18	6	8	9	11	12	14
	0.38	10	11	13	15	17	19	7	8	10	11	13	14
	0.50	13	14	15	17	19	21	8	9	11	12	14	15
	0.72	17	18	19	21	22	24	11	12	13	14	16	17
	1.00	23	24	25	26	27	29	14	15	16	17	18	20

Ratio 3:1; Interdigit = Module Size

Table 4

		Minimum Code Height for ACR Reading (mm)											
		45°						30°					
Conveyor Speed (m/s)		**0.5**	**1**	**1.5**	**2**	**2.5**	**3**	**0.5**	**1**	**1.5**	**2**	**2.5**	**3**
EAN 8-13, UPC-A Code Resolution (mm)	**0.25**	7	9	10	12	14	16	5	6	8	9	11	12
	0.30	8	9	11	13	15	17	6	7	8	10	11	13
	0.33	9	10	11	13	15	17	6	7	9	10	12	13
	0.38	10	11	12	14	16	18	7	7	9	10	12	13
	0.50	12	13	14	15	17	19	8	9	10	11	13	14
	0.72	16	17	18	19	20	22	10	11	12	13	14	16
	1.00	22	23	24	24	25	26	13	14	15	16	16	18

Table 5

9.5 READING DIAGRAMS

The reading diagram given below illustrates the convention used to calculate the minimum and maximum reading distance for barcodes. This procedure allows calculating the reading distance of your scanner when working with a focus different from the one displayed in the reading diagrams given in par. 9.5.1 and par. 9.5.2.

Draw a straight vertical line at the minimum focus distance value; the points of intersection between this line and the global reading area give the minimum reading distance.

Draw a circumference from the origin (0,0) with a radial distance equal to the maximum scanner focus distance. The points of intersection between this circumference and the global reading area give the maximum reading distance.

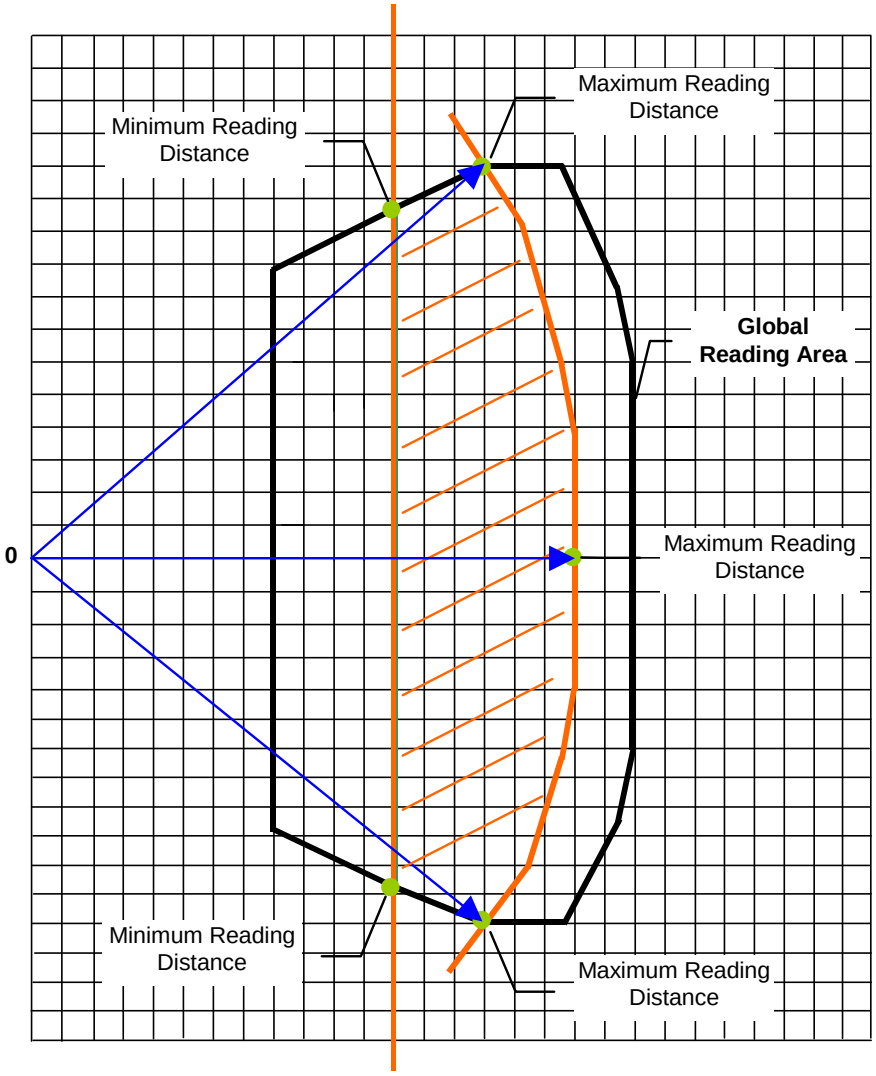

Figure 114 – Calculating a Scanner Reading Area

9.5.1 DS6400 Standard Model

DS6400-100-0XX Resolution: 0.20 mm/8 mils

The diagram shows a global reading area, which includes all possible focus positions, and the reading area obtained for the DS6400-100-0XX operating with focus position = 65 cm and barcode density of 0.20 mm (8 mils).

It is possible to obtain the minimum and maximum distance values by referring to the radial distance curves displayed in Figure 116.

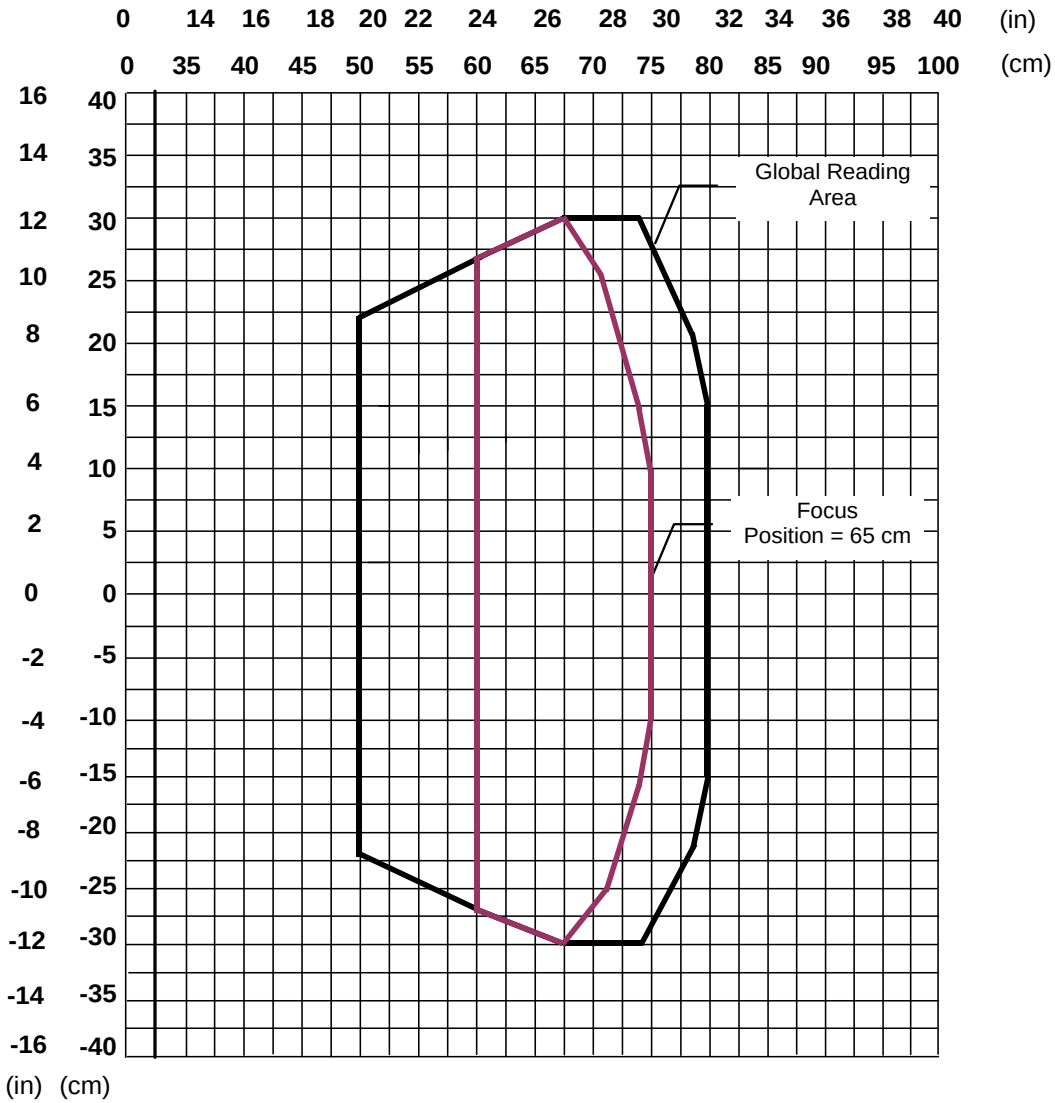

Figure 115 – Standard Model 0.20 mm / 8 mils Reading Diagram

Note: (0,0) is the center of the laser beam output window.

CONDITIONS

Code = Interleaved 2/5 or Code 39

PCS = 0.90

Pitch angle = 0°

Skew angle = 10° - 20°

Tilt angle = 0°

The curves show the minimum and maximum radial distance.

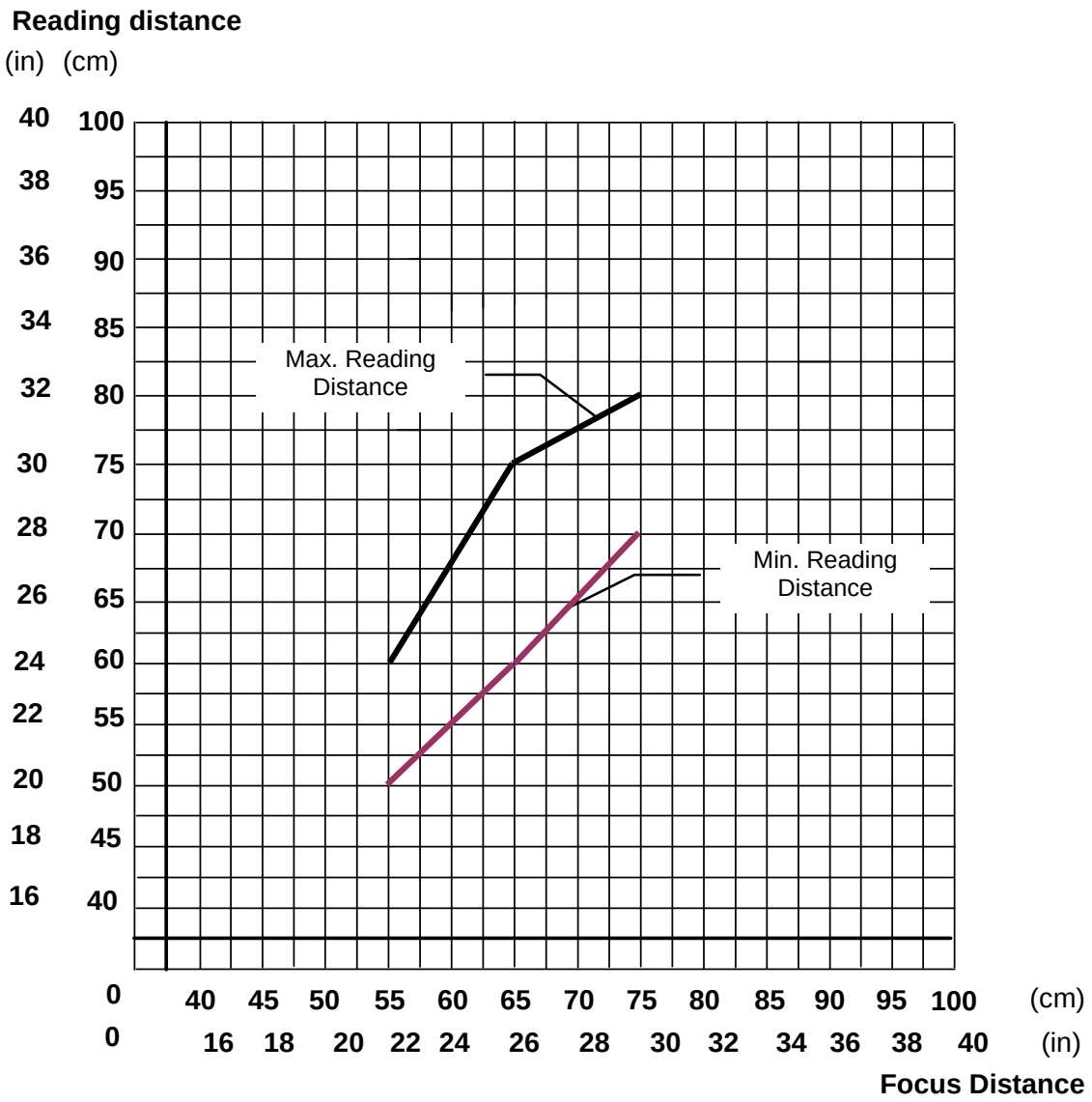

Figure 116 – Standard Model 0.20 mm / 8 mils Radial Distance

DS6400-100-0XX - Resolution: 0.25 mm/10 mils

The diagram shows a global reading area, which includes all possible focus positions, and the reading area obtained for the DS6400-100-0XX operating with focus position = 90 cm and barcode density of 0.25 mm (10 mils).

It is possible to obtain the minimum and maximum distance values by referring to the radial distance curves displayed in Figure 118.

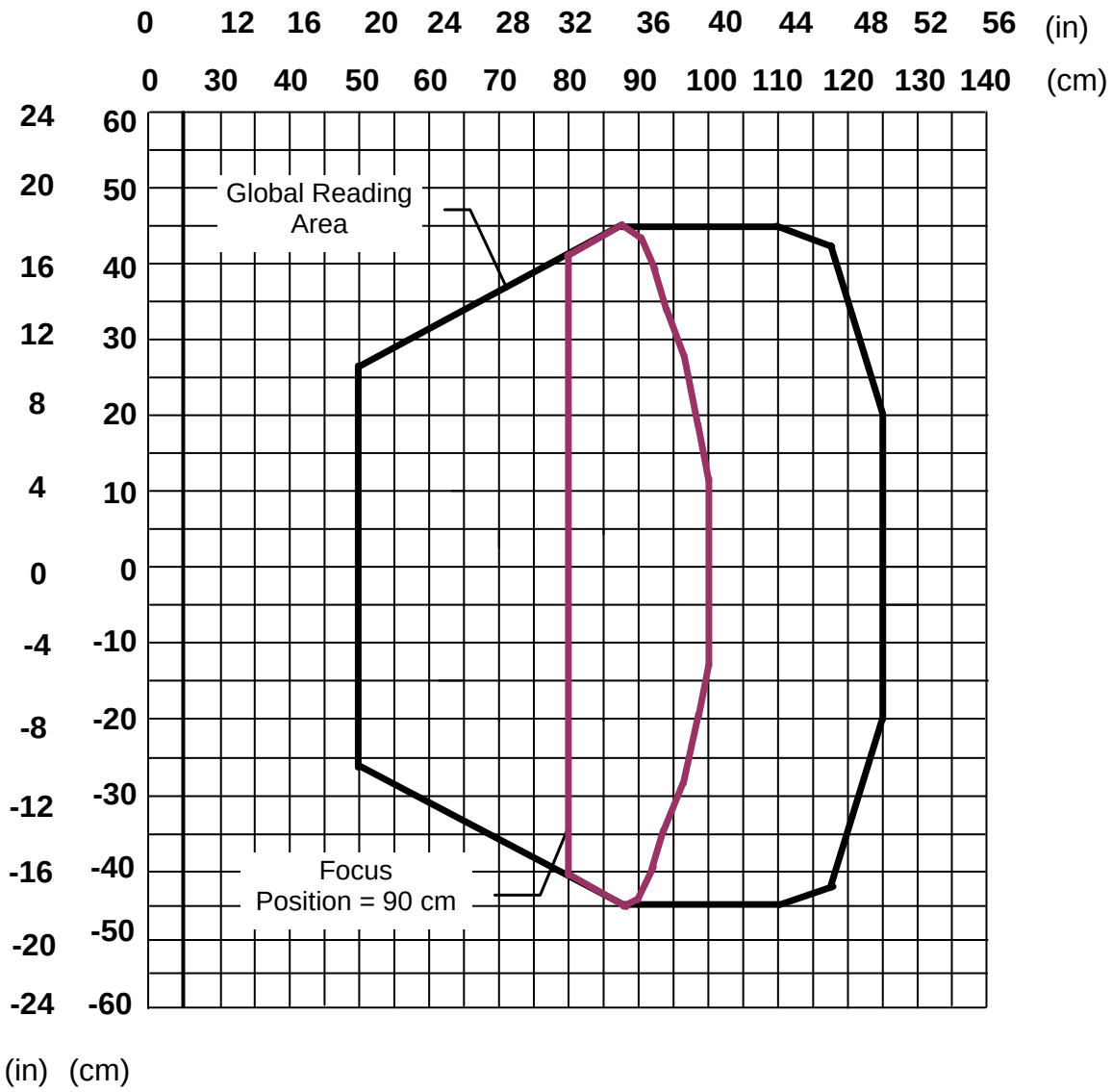

Figure 117 – Standard Model 0.25 mm / 10 mils Reading Diagram

Note: (0,0) is the center of the laser beam output window.

CONDITIONS

Code = Interleaved 2/5 or Code 39

PCS = 0.90

Pitch angle = 0°

Skew angle = 10° - 20°

Tilt angle = 0°

The curves show the minimum and maximum radial distance.

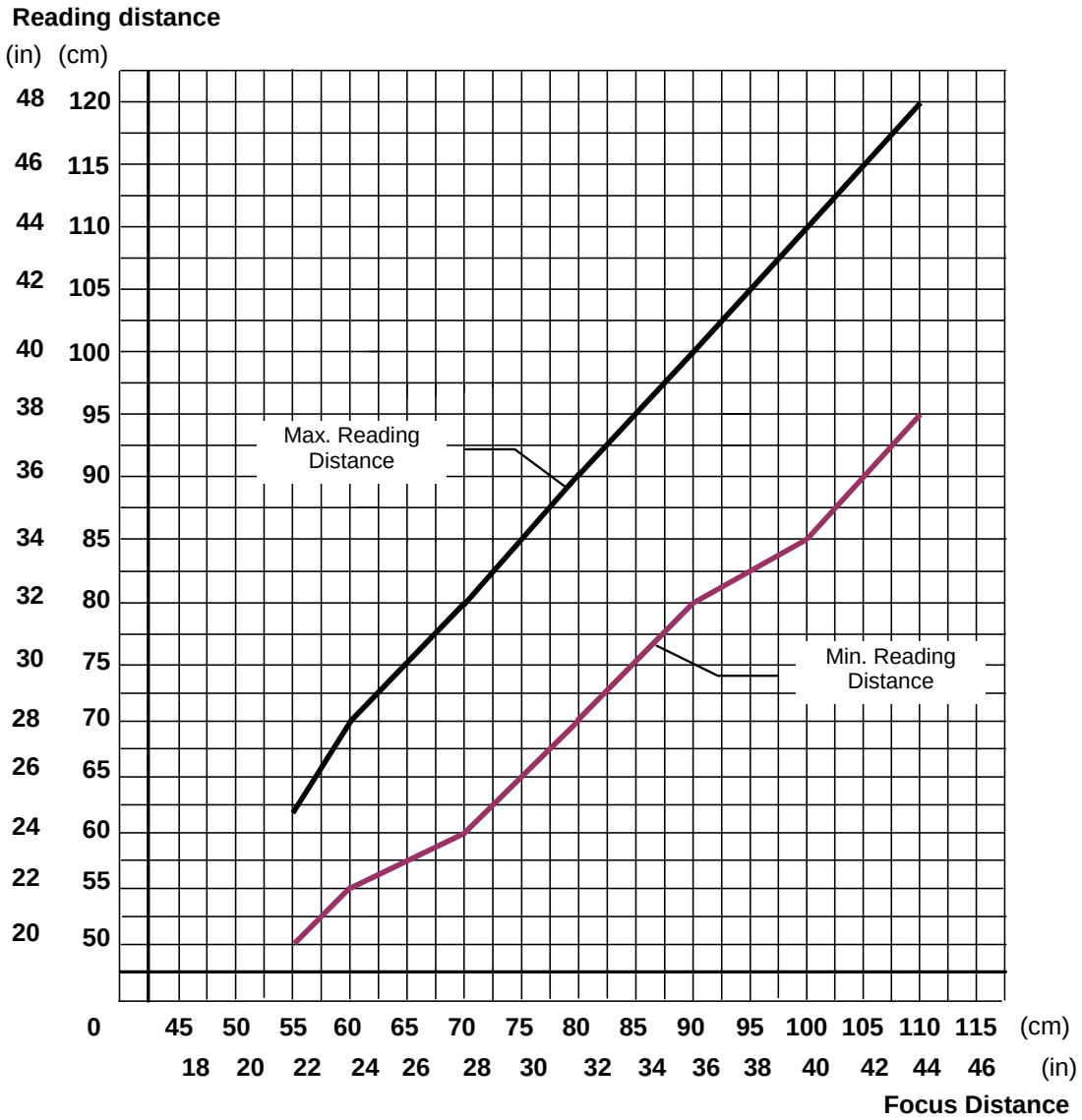

Figure 118 – Standard Model 0.25 mm / 10 mils Radial Distance

DS6400-100-0XX - Resolution: 0.30 mm/12 mils

The diagram shows a global reading area, which includes all possible focus positions, and the reading area obtained for the DS6400-100-0XX operating with focus position = 110 cm and barcode density of 0.30 mm (12 mils).

It is possible to obtain the minimum and maximum distance values by referring to the radial distance curves displayed in Figure 120.

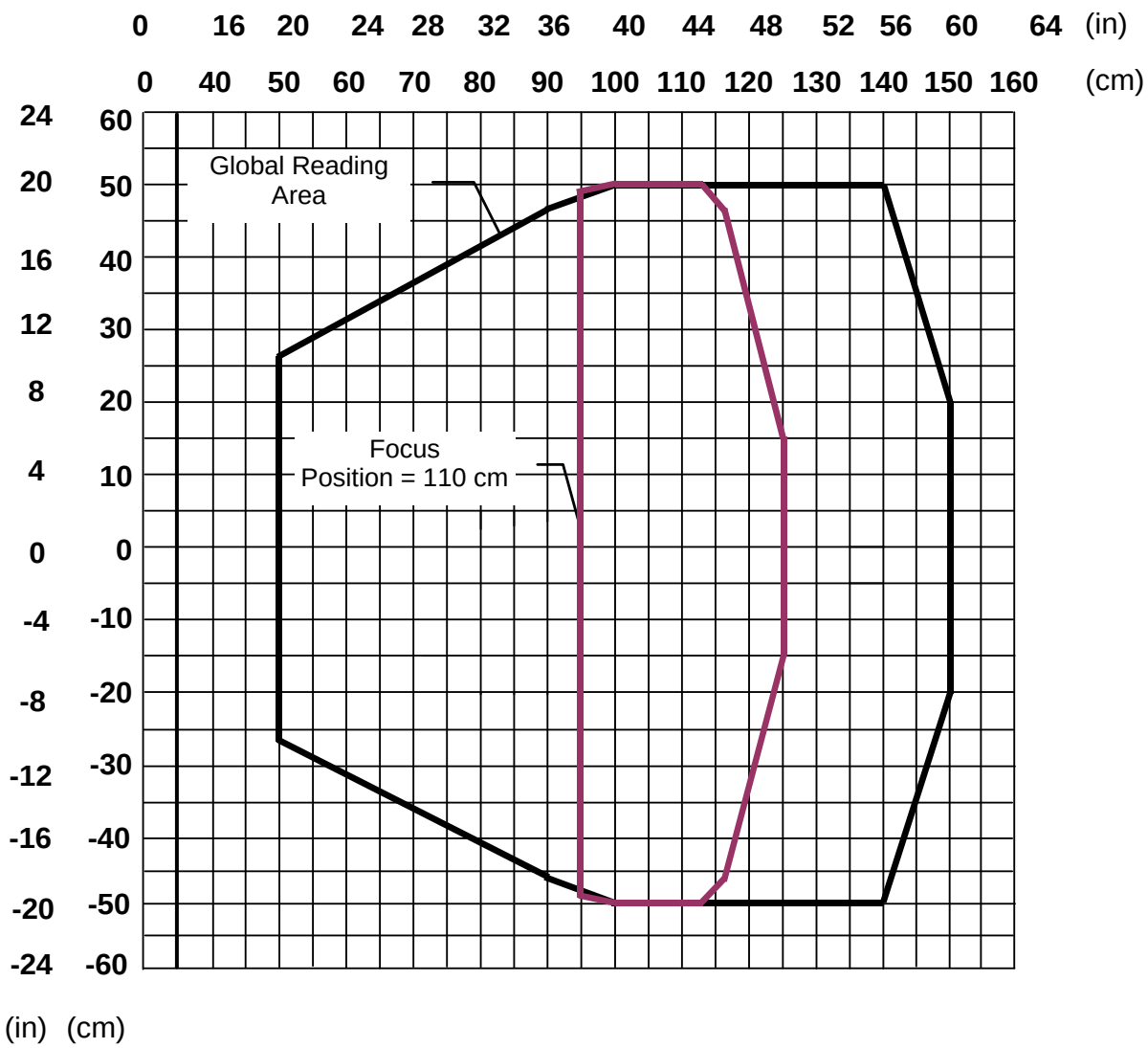

Figure 119 – Standard Model 0.30 mm / 12 mils Reading Diagram

Note: (0,0) is the center of the laser beam output window.

CONDITIONS

Code = Interleaved 2/5 or Code 39
PCS = 0.90
Pitch angle = 0°
Skew angle = 10° - 20°
Tilt angle = 0°

The curves show the minimum and maximum radial distance.

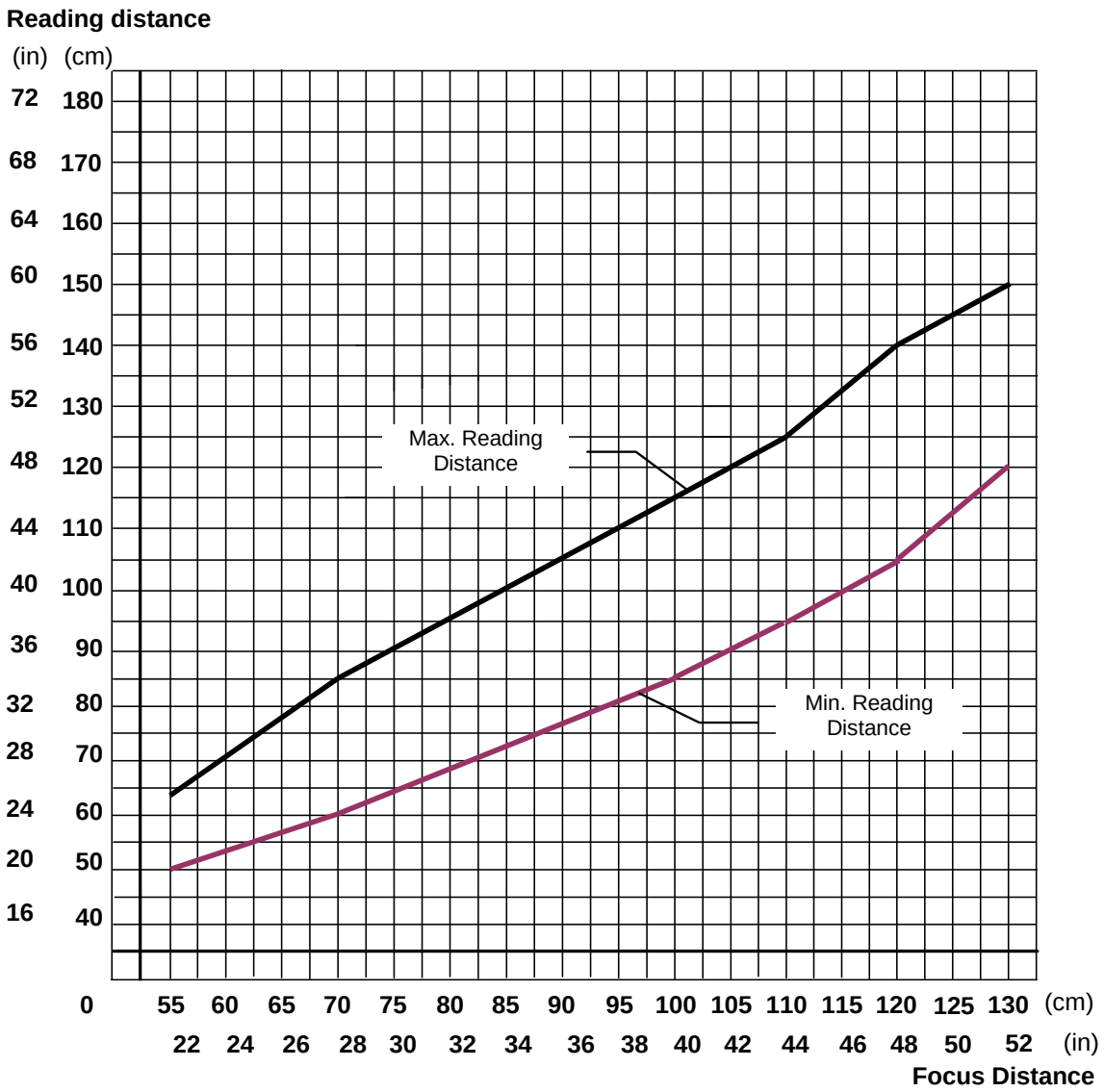

Figure 120 – Standard Model 0.30 mm / 12 mils Radial Distance

DS6400-100-0XX - Resolution: 0.38 mm/15 mils

The diagram shows a global reading area, which includes all possible focus positions, and the reading area obtained for the DS6400-100-0XX operating with focus position = 140 cm and barcode density of 0.38 mm (15 mils).

It is possible to obtain the minimum and maximum distance values by referring to the radial distance curves displayed in Figure 122.

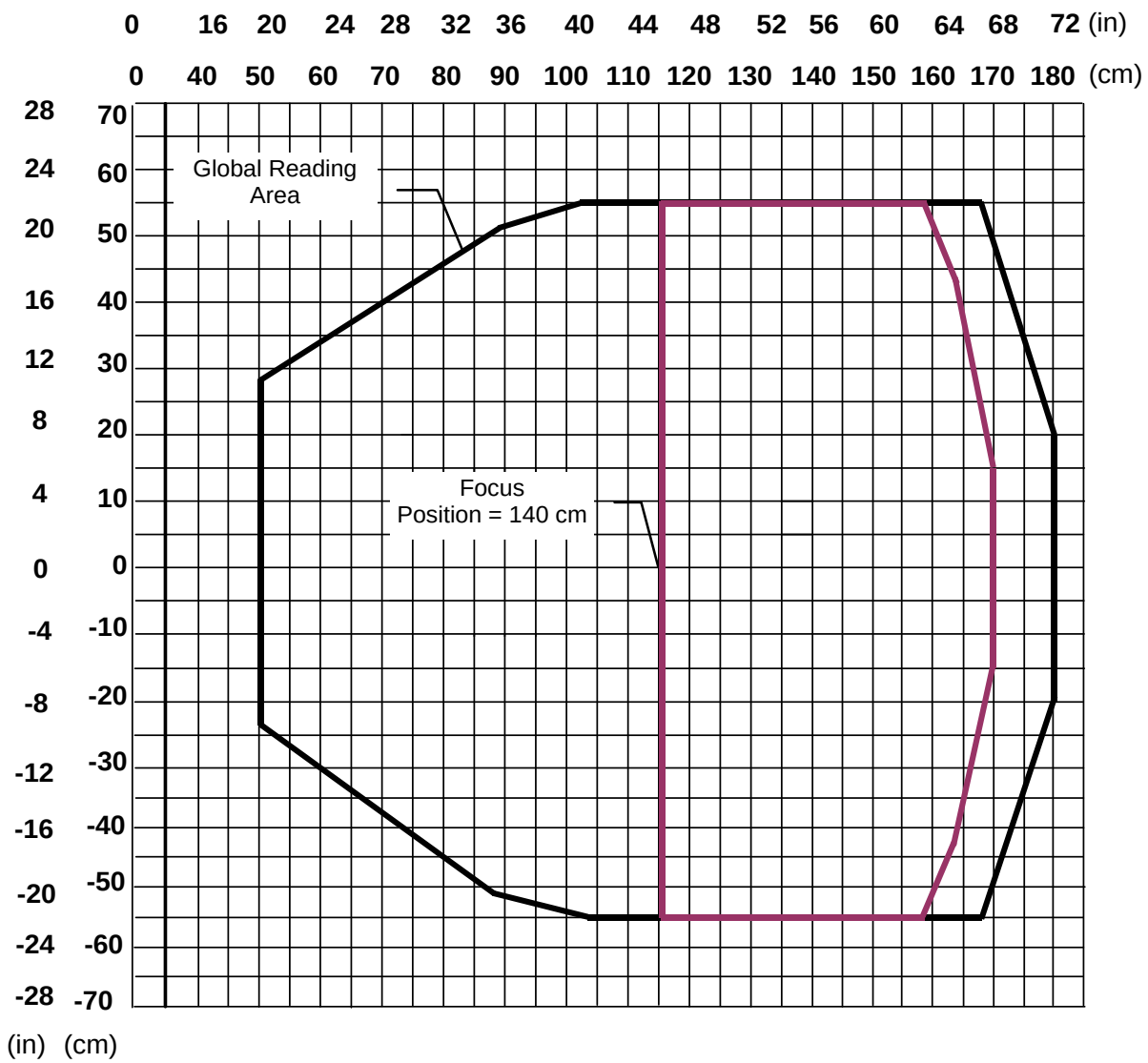

Figure 121 – Standard Model 0.38 mm / 15 mils Reading Diagram

Note: (0,0) is the center of the laser beam output window.

CONDITIONS

Code = Interleaved 2/5 or Code 39

PCS = 0.90

Pitch angle = 0°

Skew angle = 10° - 20°

Tilt angle = 0°

The curves show the minimum and maximum radial distance.

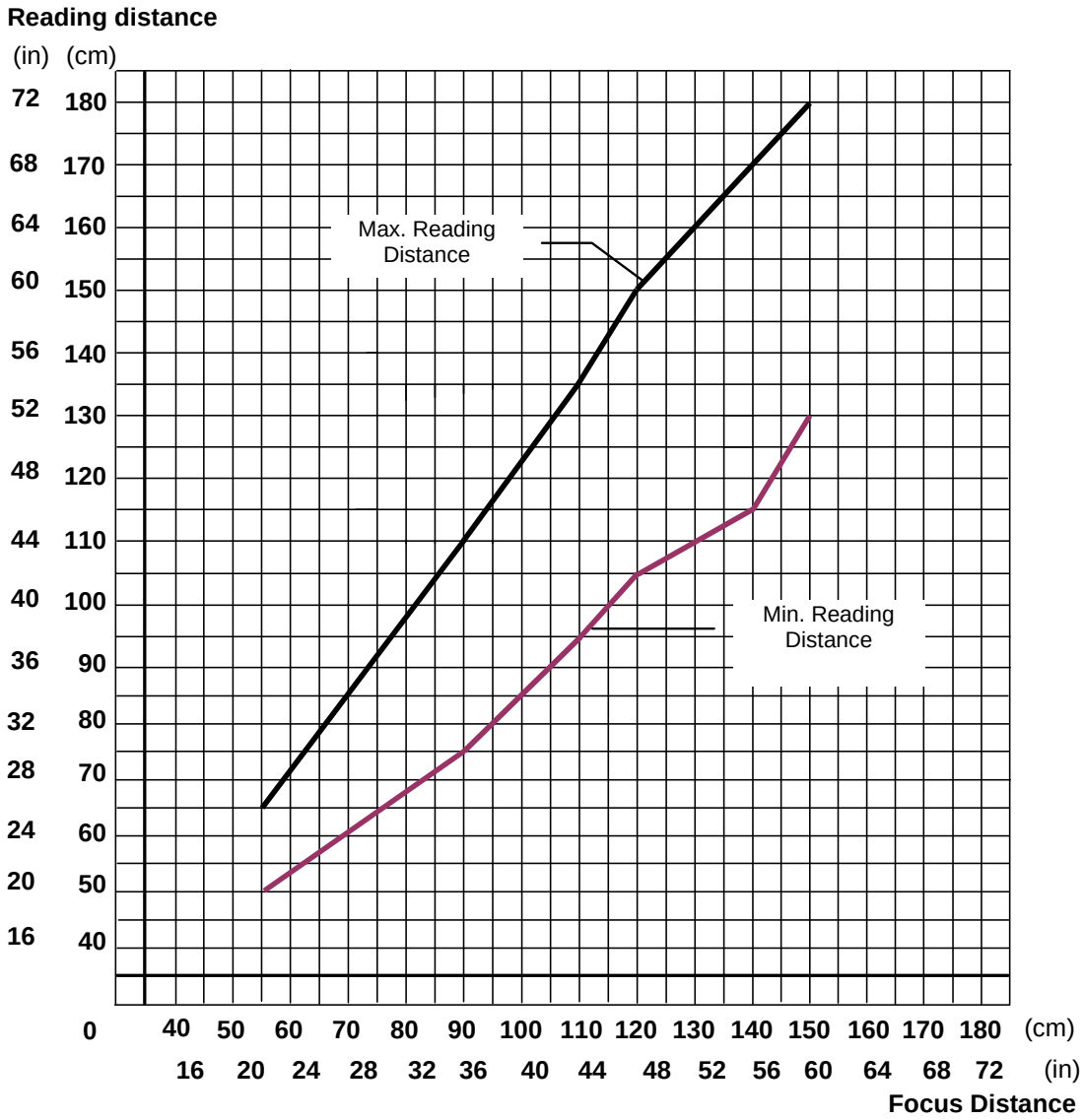

Figure 122 – Standard Model 0.38 mm / 15 mils Radial Distance

DS6400-100-0XX - Resolution: 0.50 mm/20 mils

The diagram shows a global reading area, which includes all possible focus positions, and the reading area obtained for the DS6400-100-0XX operating with focus position = 120 cm and barcode density of 0.50 mm (20 mils).

It is possible to obtain the minimum and maximum distance values by referring to the radial distance curves displayed in Figure 124.

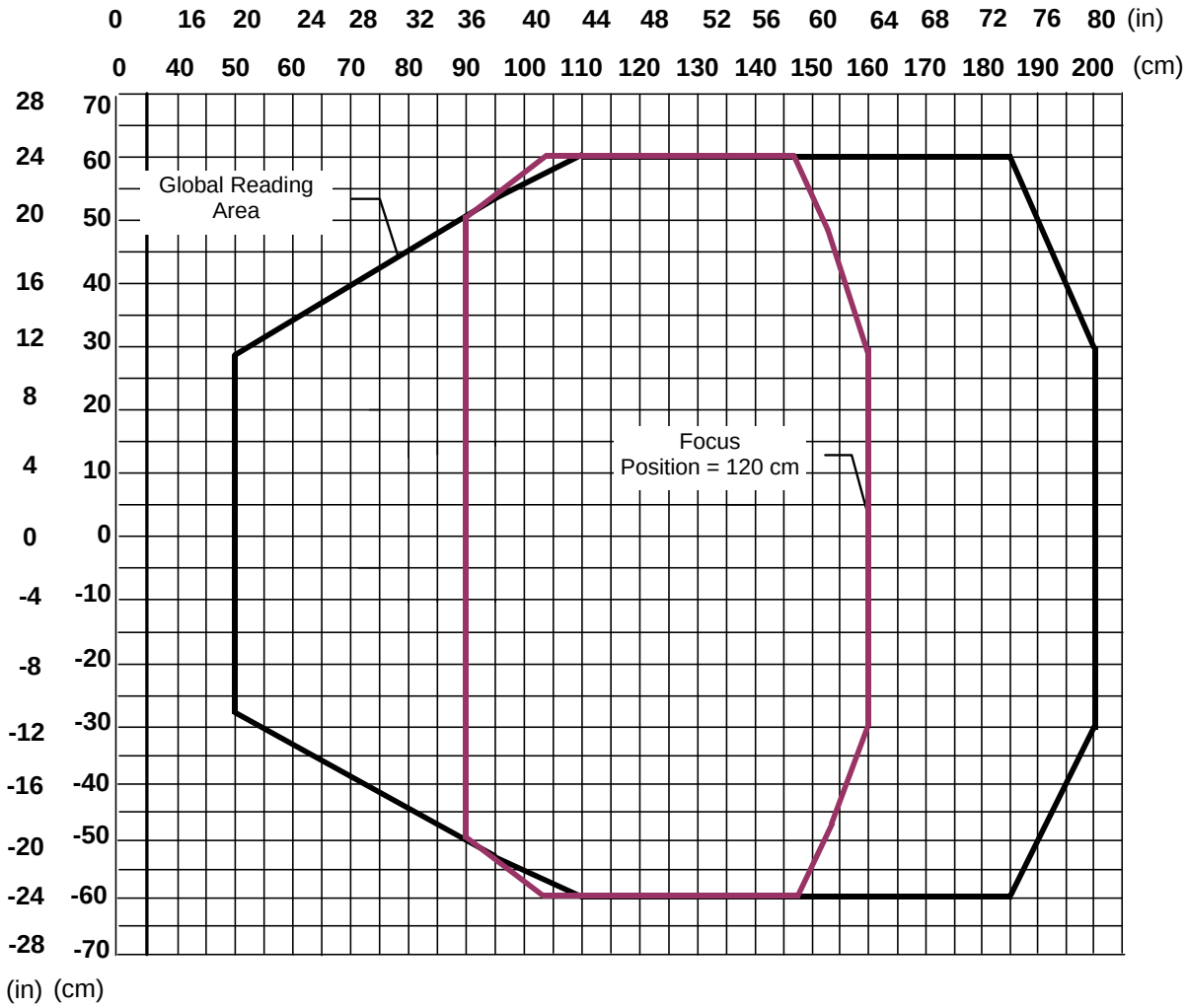

Figure 123 – Standard Model 0.50 mm / 20 mils Reading Diagram

Note: (0,0) is the center of the laser beam output window.

CONDITIONS

Code = Interleaved 2/5 or Code 39
PCS = 0.90
Pitch angle = 0°
Skew angle = 10° - 20°
Tilt angle = 0°

The curves show the minimum and maximum radial distance.

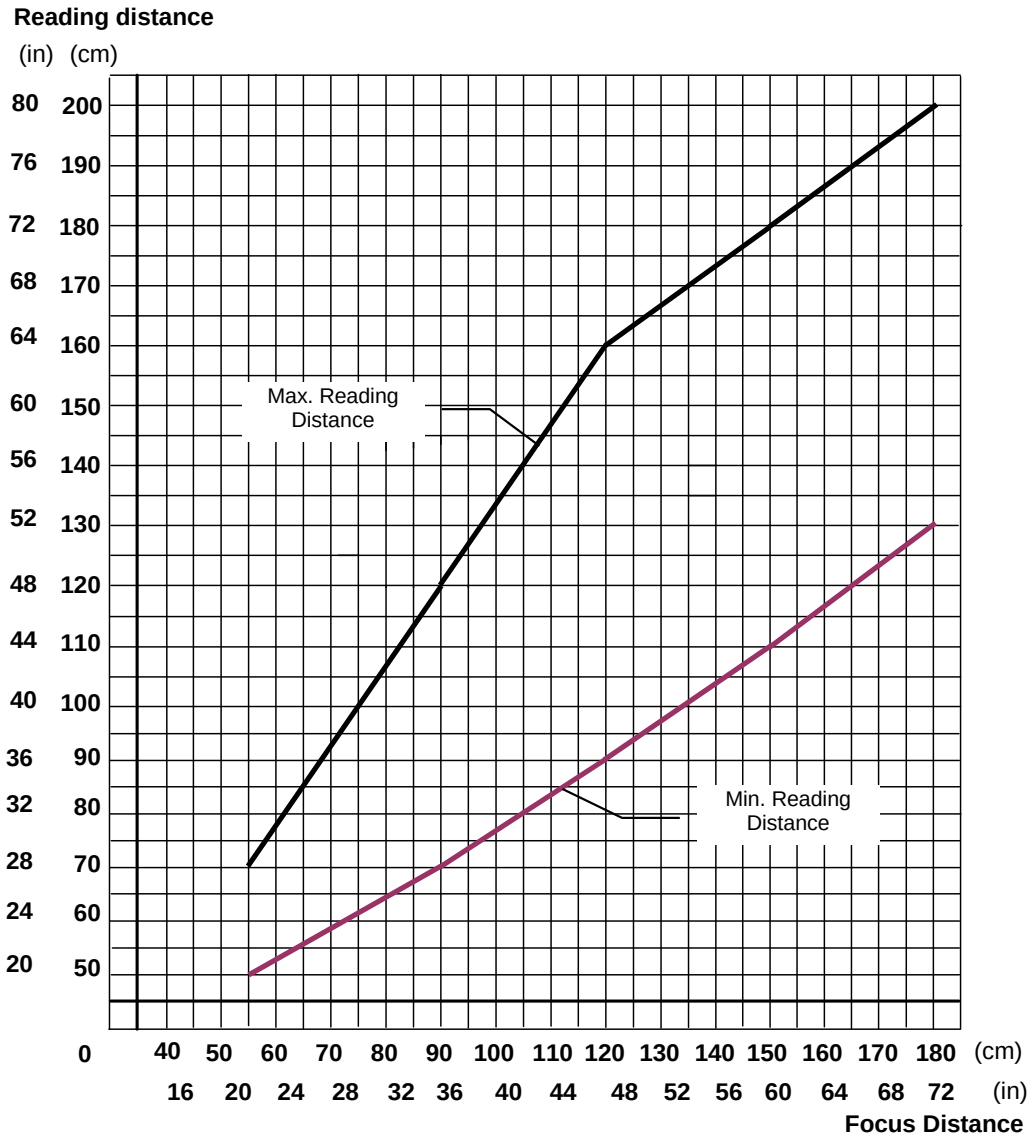

Figure 124 – Standard Model 0.50 mm / 20 mils Radial Distance

9.5.2 DS6400 Oscillating Mirror Model

DS6400-105-0XX - Resolution: 0.20 mm/8 mils

The diagram shows a global reading area, which includes all possible focus positions, and the reading area obtained for the DS6400-105-0XX operating with focus position = 60 cm and barcode density of 0.20 mm (8 mils).

It is possible to obtain the minimum and maximum distance values by referring to the radial distance curves displayed in Figure 126.

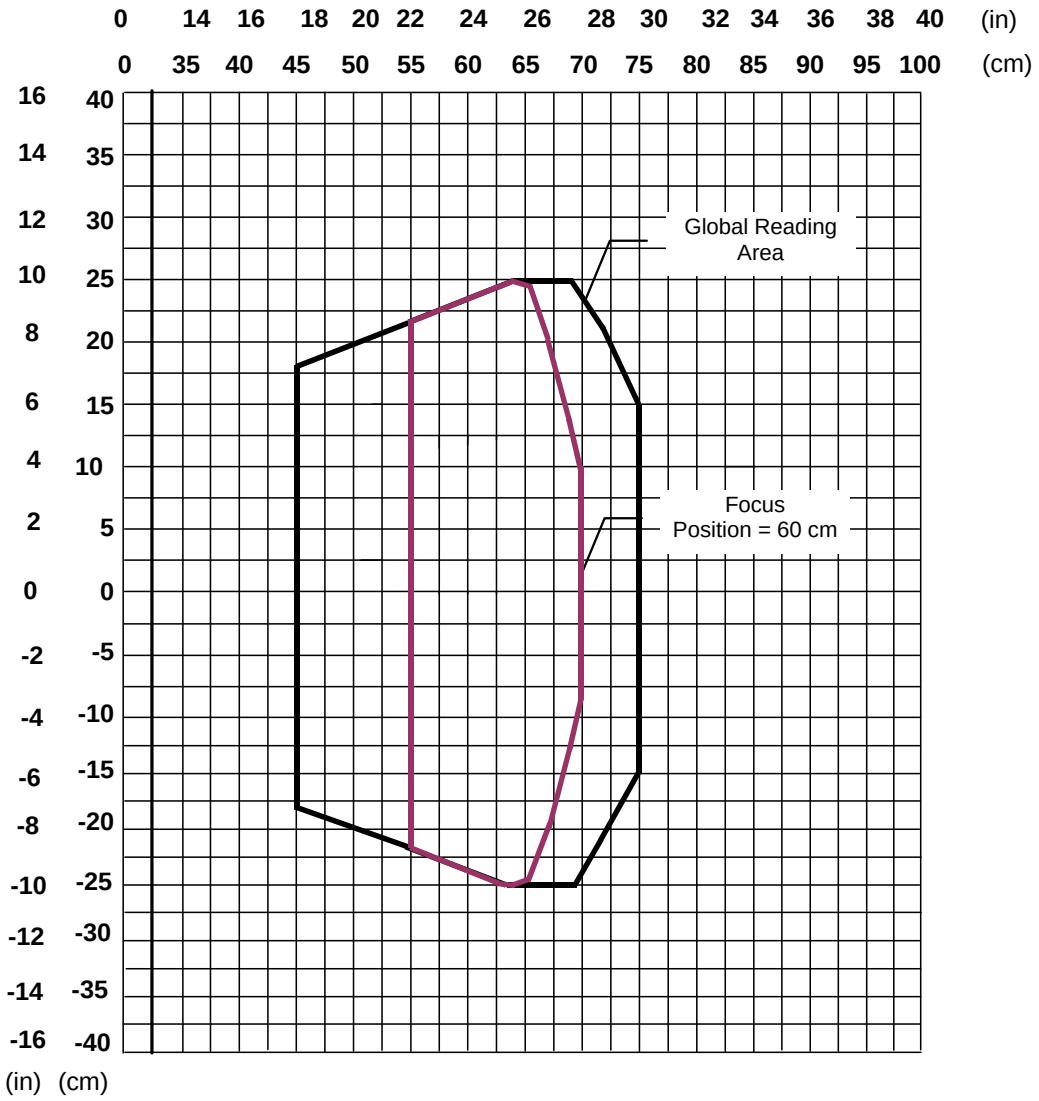

Figure 125 – Oscillating Mirror Model 0.20 mm / 8 mils Reading Diagram

Note: (0,0) is the center of the laser beam output window.

CONDITIONS

Code = Interleaved 2/5 or Code 39

PCS = 0.90

Pitch angle = 0°

Skew angle = 10° - 20°

Tilt angle = 0°

The curves show the minimum and maximum radial distance.

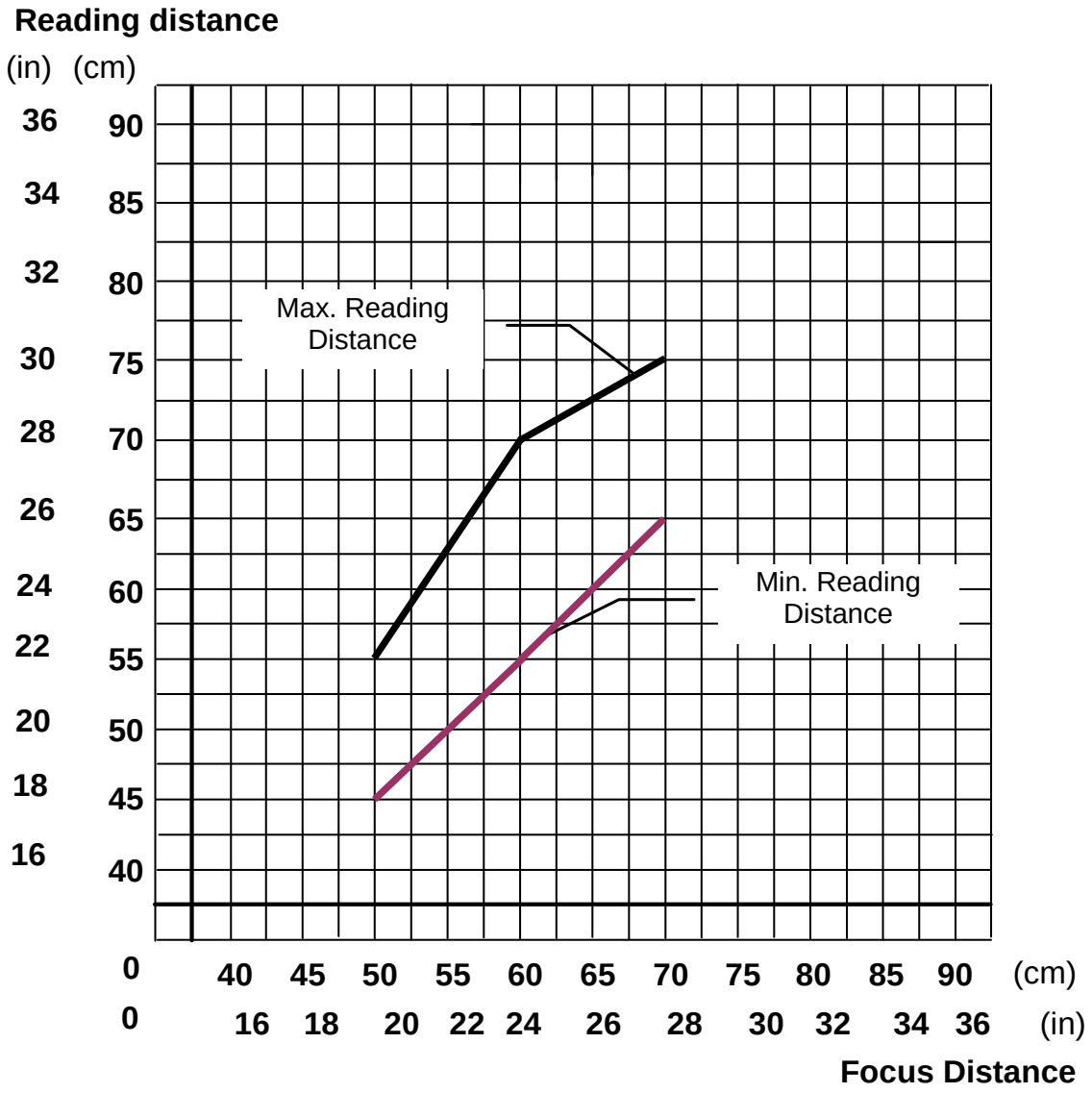

Figure 126 - Oscillating Mirror Model 0.20 mm / 8 mils Radial Distance

DS6400-105-0XX - Resolution: 0.25 mm/10 mils

The diagram shows a global reading area, which includes all possible focus positions, and the reading area obtained for the DS6400-105-0XX operating with focus position = 95 cm and barcode density of 0.25 mm (10 mils).

It is possible to obtain the minimum and maximum distance values by referring to the radial distance curves displayed in Figure 128.

Figure 127 - Oscillating Mirror Model 0.25 mm / 10 mils Reading Diagram

Note: (0,0) is the center of the laser beam output window.

CONDITIONS

Code = Interleaved 2/5 or Code 39
PCS = 0.90
Pitch angle = 0°
Skew angle = 10° - 20°
Tilt angle = 0°

The curves show the minimum and maximum radial distance.

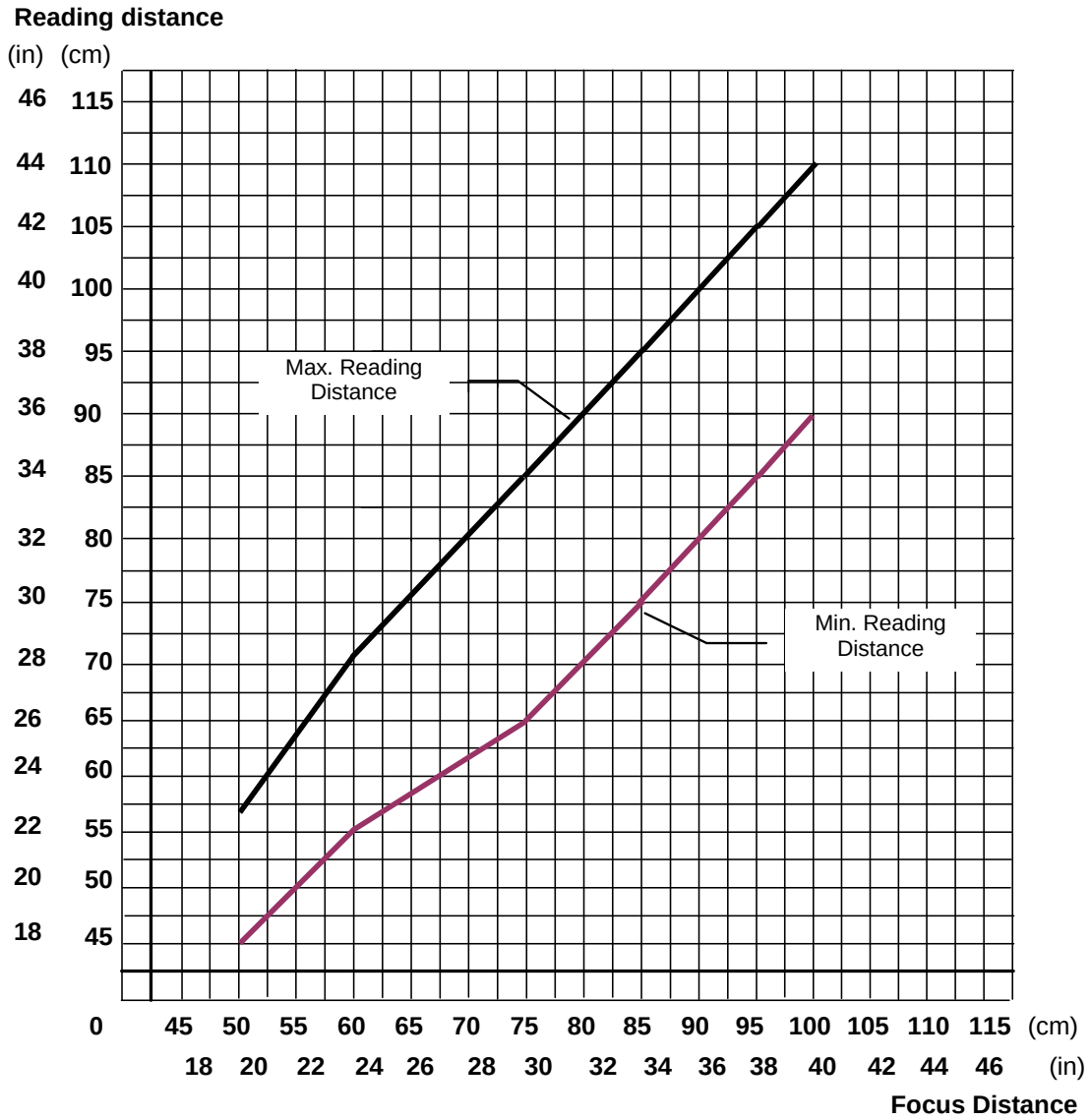

Figure 128 - Oscillating Mirror Model 0.25 mm / 10 mils Radial Distance

DS6400-105-0XX - Resolution: 0.30 mm/12 mils

The diagram shows a global reading area, which includes all possible focus positions, and the reading area obtained for the DS6400-105-0XX operating with focus position = 110 cm and barcode density of 0.30 mm (12 mils).

It is possible to obtain the minimum and maximum distance values by referring to the radial distance curves displayed in Figure 130.

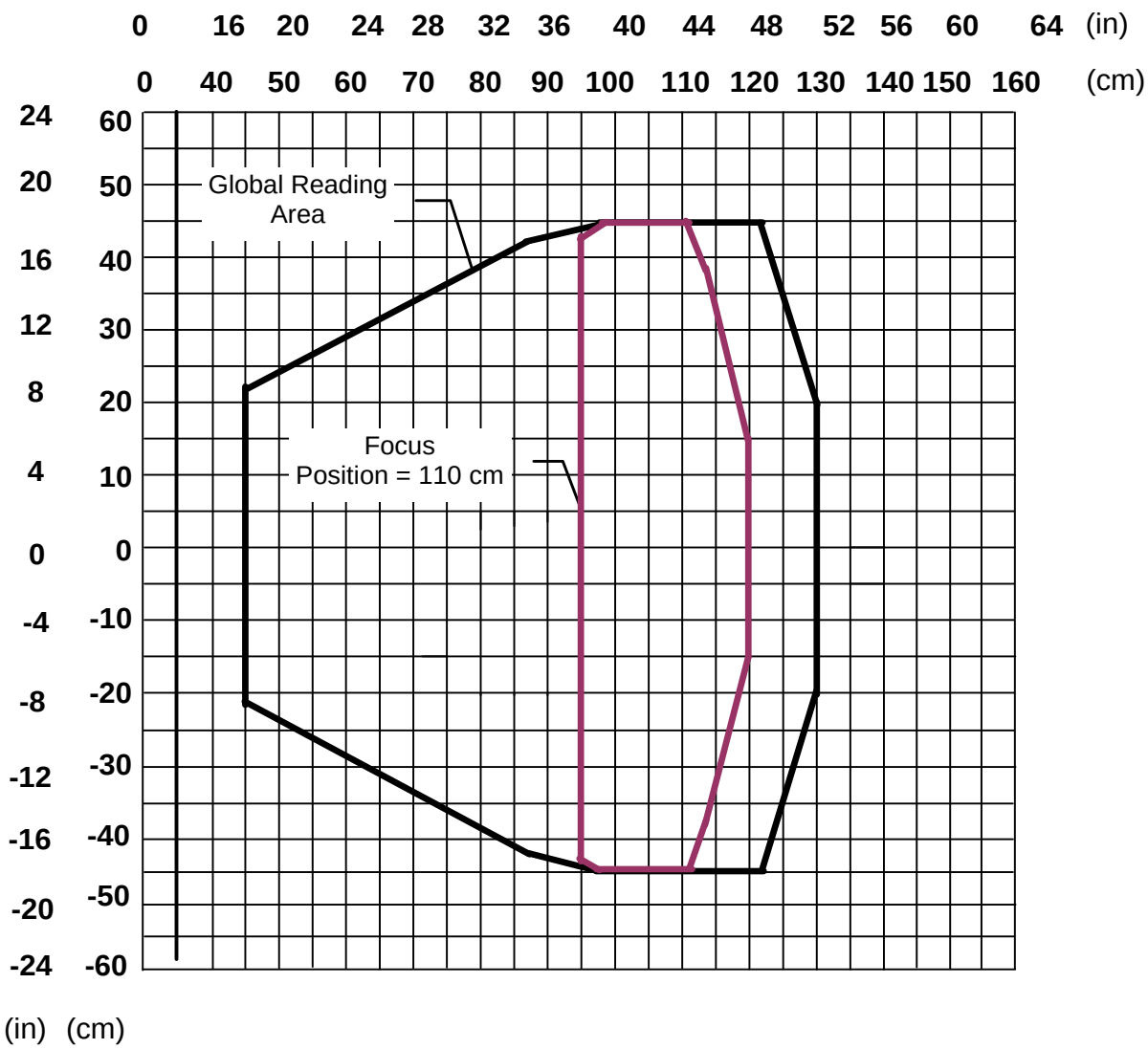

Figure 129 - Oscillating Mirror Model 0.30 mm / 12 mils Reading Diagram

Note: (0,0) is the center of the laser beam output window.

CONDITIONS

Code = Interleaved 2/5 or Code 39

PCS = 0.90

Pitch angle = 0°

Skew angle = 10° - 20°

Tilt angle = 0°

The curves show the minimum and maximum radial distance.

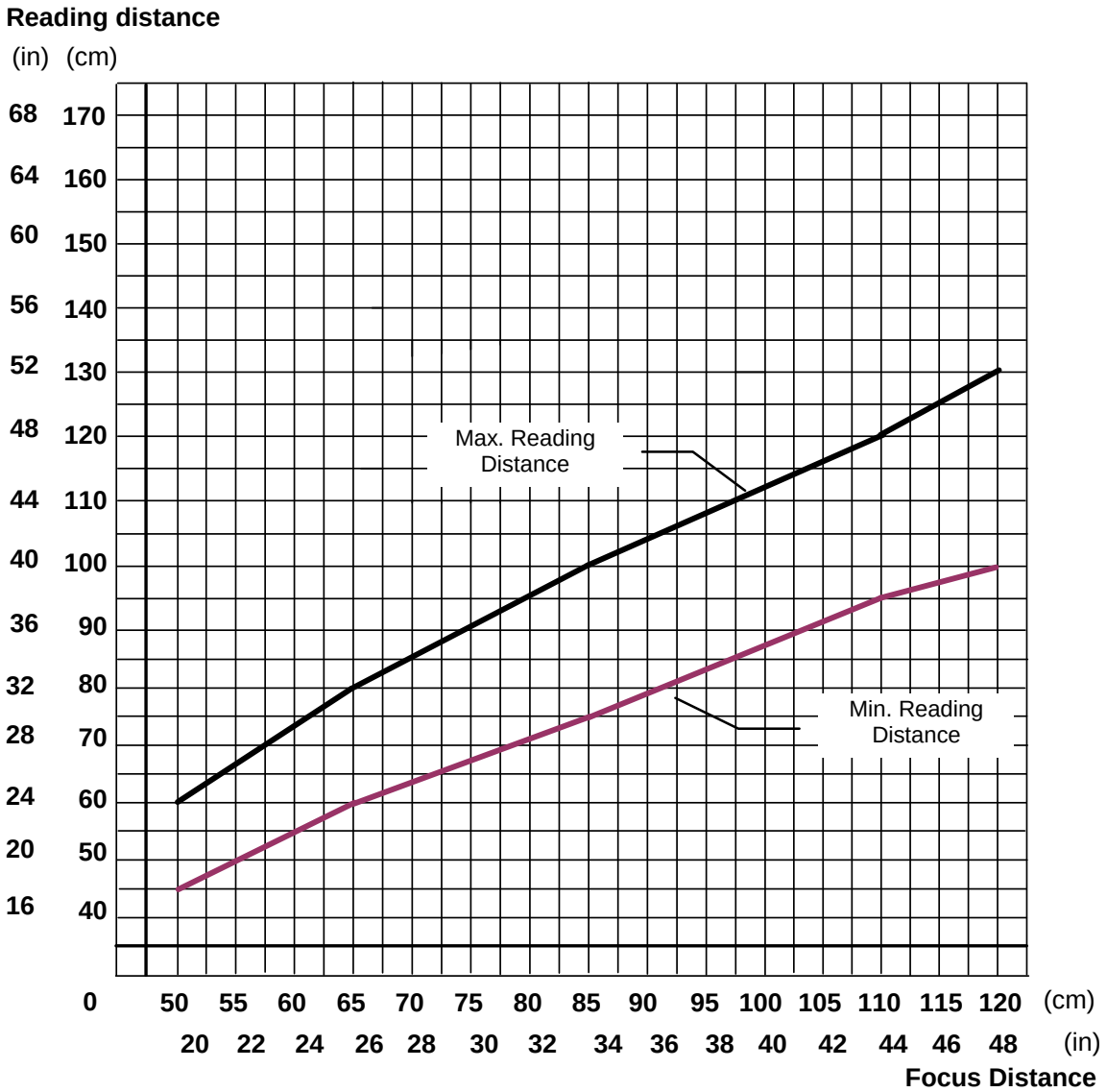

Figure 130 - Oscillating Mirror Model 0.30 mm / 12 mils Radial Distance

DS6400-105-0XX - Resolution: 0.38 mm/15 mils

The diagram shows a global reading area, which includes all possible focus positions, and the reading area obtained for the DS6400-105-0XX operating with focus position = 115 cm and barcode density of 0.38 mm (15 mils).

It is possible to obtain the minimum and maximum distance values by referring to the radial distance curves displayed in Figure 132.

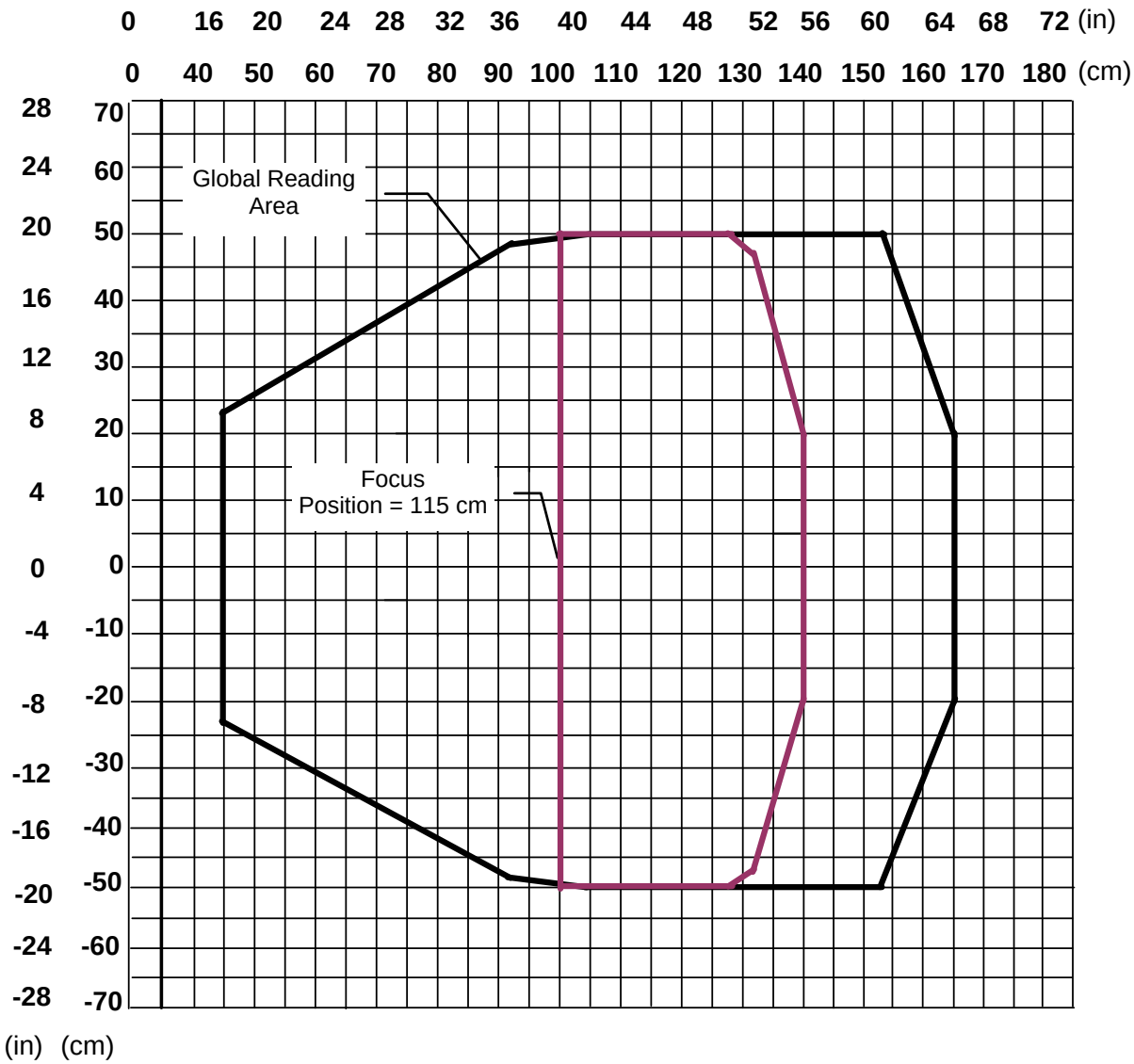

Figure 131 - Oscillating Mirror Model 0.38 mm / 15 mils Reading Diagram

Note: (0,0) is the center of the laser beam output window.

CONDITIONS

Code = Interleaved 2/5 or Code 39

PCS = 0.90

Pitch angle = 0°

Skew angle = 10° - 20°

Tilt angle = 0°

The curves show the minimum and maximum radial distance.

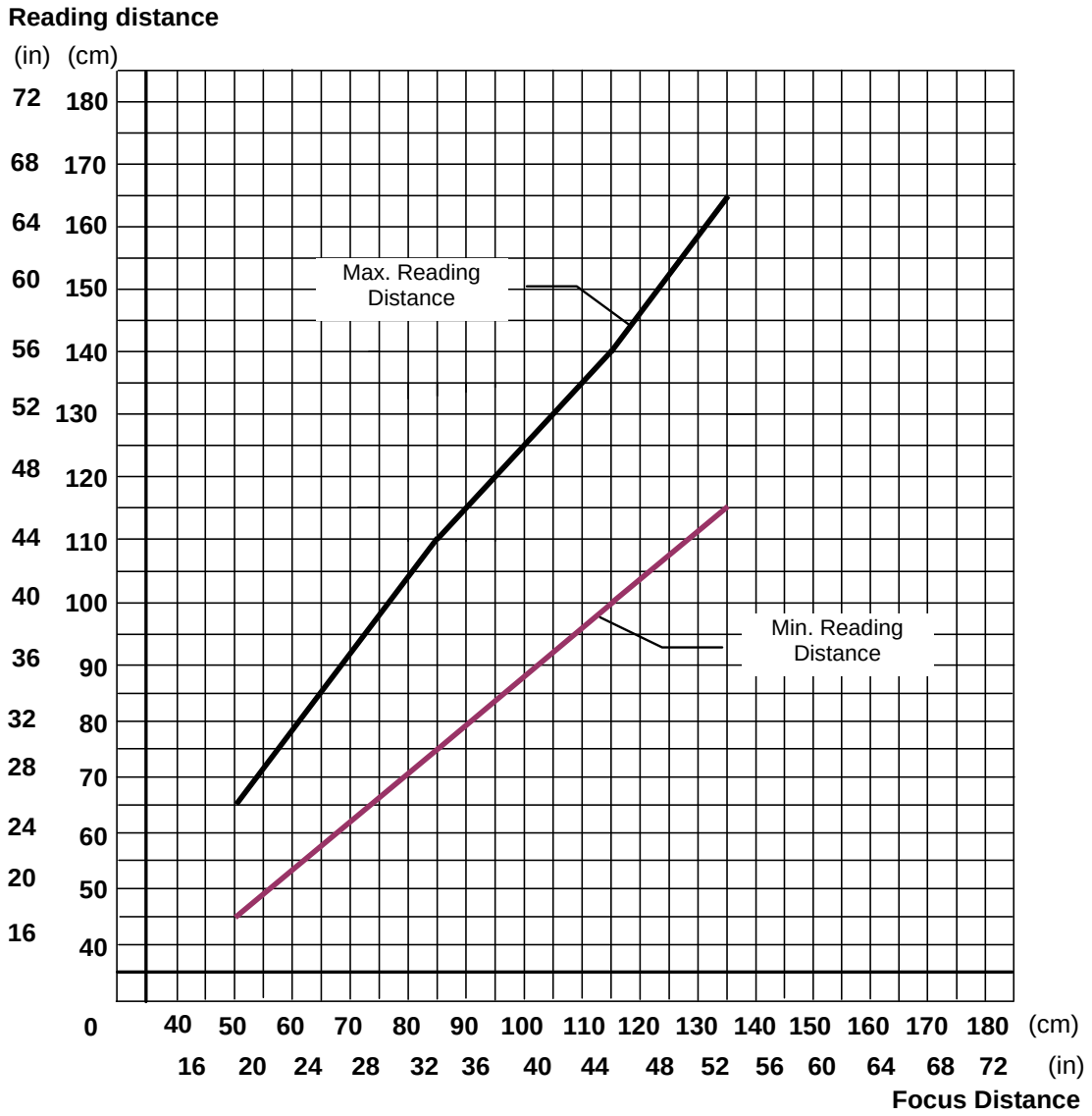

Figure 132 - Oscillating Mirror Model 0.38 mm / 15 mils Radial Distance

DS6400-105-0XX - Resolution: 0.50 mm/20 mils

The diagram shows a global reading area, which includes all possible focus positions, and the reading area obtained for the DS6400-105-0XX operating with focus position = 115 cm and barcode density of 0.50 mm (20 mils).

It is possible to obtain the minimum and maximum distance values by referring to the radial distance curves displayed in Figure 134.

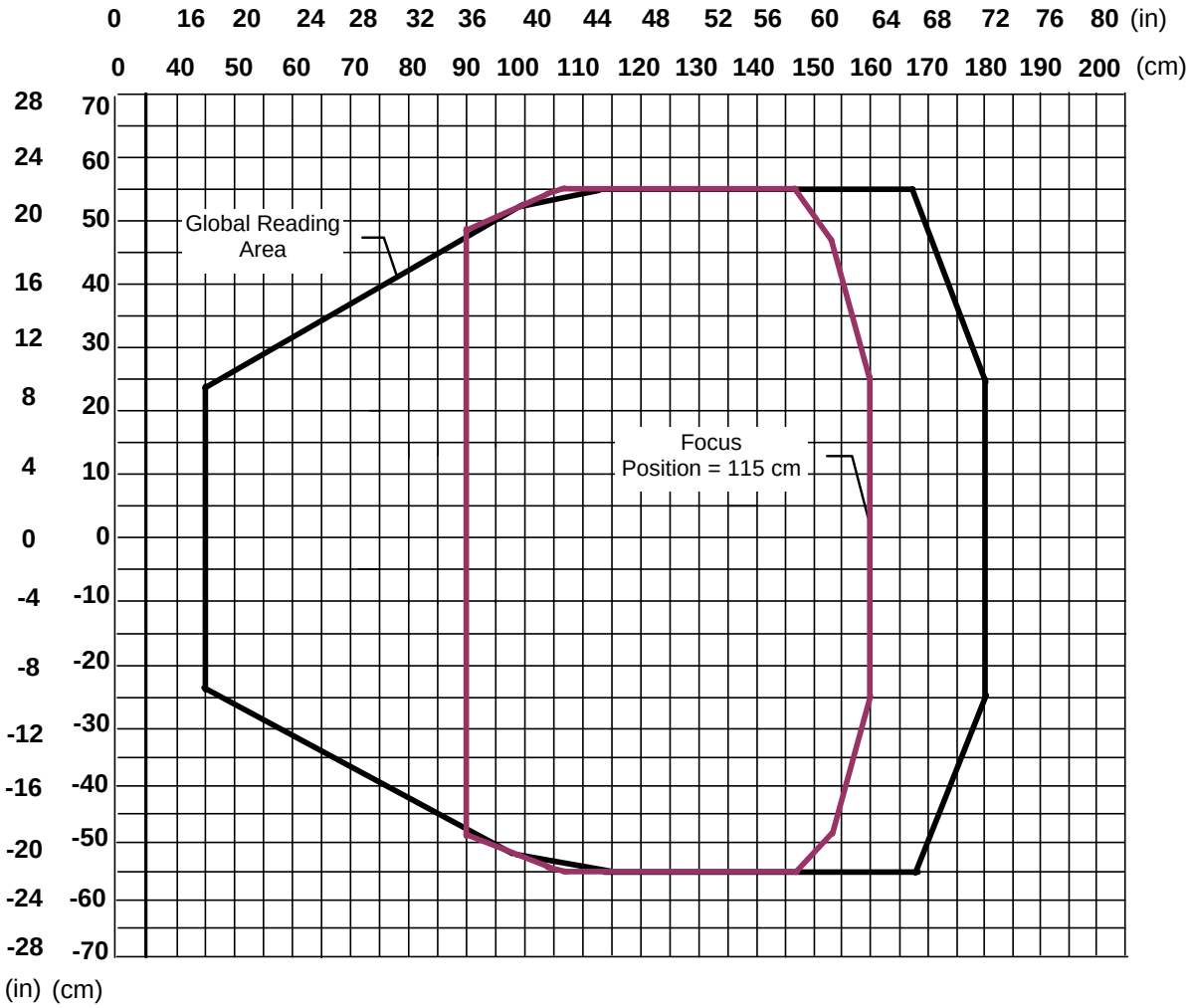

Figure 133 - Oscillating Mirror Model 0.50 mm / 20 mils Reading Diagram

Note: (0,0) is the center of the laser beam output window.

CONDITIONS

Code = Interleaved 2/5 or Code 39

PCS = 0.90

Pitch angle = 0°

Skew angle = 10° - 20°

Tilt angle = 0°

The curves show the minimum and maximum radial distance.

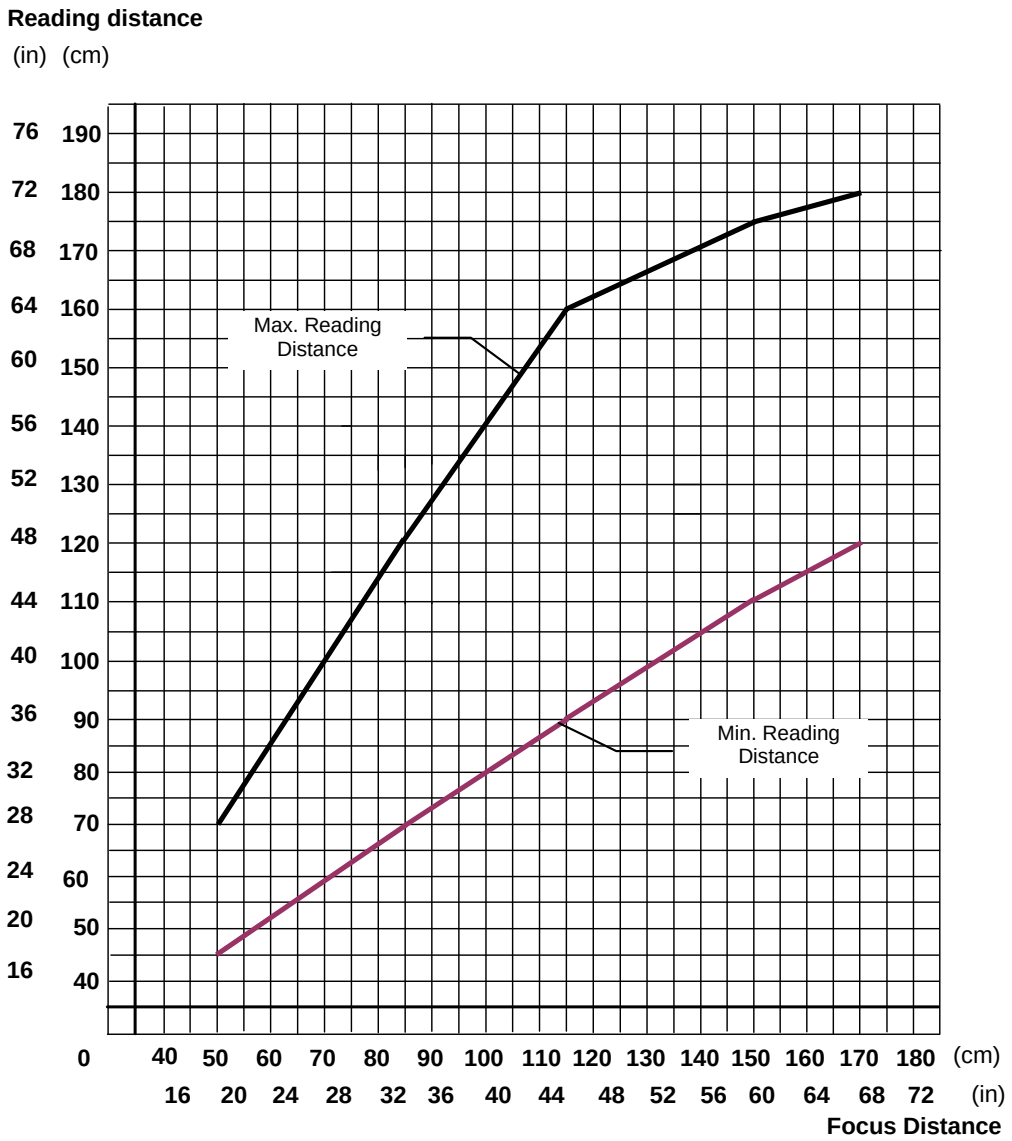

Figure 134 - Oscillating Mirror Model 0.50 mm / 20 mils Radial Distance

10 MAINTENANCE

10.1 CLEANING

Clean the laser beam output window periodically for correct operation of the scanner (see Figure A).

Dust, dirt, etc. on the window may alter the reading performance.

Repeat the operation frequently in particularly dirty environments.

Use soft material and alcohol to clean the window and avoid any abrasive substances.

WARNING

Clean the window of the DS6400 when the scanner is turned off or at least when the laser beam is not active.

10.2 EXTERNAL MEMORY BACKUP & RESTORE

Backup and Restore is vital to all applications in that it provides a method to quickly replace a reader and return the station to full capacity in the event of a failure. The External Memory Backup and Restore procedure is the preferred method since it always provides complete backup and restore functions (Configuration and Environmental parameters).

When the DS6400 scanner is connected through CBX series connection boxes, Backup and Restore is provided through the BM100 accessory module installed inside the CBX100 or CBX500 connection box.

If the DS6400 scanner is integrated into an ID-NET™ network having an SC4000 ID-NET™ controller as Master, then the SC4000 also provides the Backup and Restore procedure.

This procedure can be performed directly from the Genius™ Device menu.

To manually perform the Backup and Restore procedure see the relative BM100 or SC4000 manual for details.

10.3 AUTOMATIC SCANNER REPLACEMENT (ASR)

NOTE

The ASR procedure is available for backward compatibility or for applications that do not use the CBX/SC4000, however it is not the preferred method.

The Datalogic Automatic Scanner Replacement (ASR) procedure allows restoring system functioning automatically after one or more scanners are replaced in a Master/Slave Lonworks network.

The ASR procedure is principally used for PackTrack™ configurations, but it restores only a part of the system parameters: common slave parameters (Code Selection and Reconstruction) plus each single slave PackTrack™ calibration.

The Master must be prepared at the time of installation in order for this procedure to work correctly.

10.3.1 ASR Network Configuration

1. On the Master scanner, **check the Modify & Backup Lon Slave Scanner Configuration parameter** in Genius™ and configure the Lonworks Slave Scanner Common Parameters (Code and Reconstruction Parameters).
2. Enable the ASR procedure through the **Enable A.S.R. parameter** in the Master configuration.
3. Send the configuration to the Master EEPROM to force the Slave Operating Mode, Code Reading Symbologies and Reconstruction parameters and store all the Slave PackTrack™ calibration tables.

   Now the Slave scanners are configured through the Master (ASR parameters stored in the Master) and the ASR procedure is implemented.
4. Save this configuration to file (.ddc).

10.3.2 Scanner Replacement Procedure

NOTE

The ASR procedure requires replacing one scanner at a time.

Slave

1. Power down the entire system.
2. Replace the Slave scanner with a new one (default settings).
3. Power up the system and wait for initialization.

Master

1. Load the saved configuration from file (.ddc) to a new Master scanner.
2. Power down the entire system.
3. Replace the old Master scanner with the new one.
4. Power up the system and wait for initialization.

NOTE

The ASR works only if both the Master and Slave devices have software 6.40 or later.

11 TROUBLESHOOTING

NOTE	*Before contacting your local Datalogic office or Datalogic Partner or ARC, it is suggested to save the device configuration to a *.ddc file by means of the Genius™ software configuration program and check the device exact model and serial number.*

TROUBLESHOOTING GUIDE	
Problem	**Suggestion**
Power On: the “Power On” LED is not lit.	• Is power connected? • If using an external power supply (like PG6000), is it connected to the AC source? • If using rail power, does rail have power? • If using CBX100/CBX500, does it have power (check switch and LED)? Check if you are referring to the 25/26-pin connector or to the CBX100/CBX500 spring clamp connectors. • Measure voltage at pin 13 and 25 (for 25/26-pin connector) or at spring clamp **Vdc** and **GND** (for CBX100/CBX500).
On Line Mode: the Master’s “Phase On” LED is not lit (when external trigger activates).	• Check carefully if you are referring to the 25/26-pin connector or to the CBX100/CBX500 spring clamp connectors. • Is sensor connected to EXT TRIG/PS input? • Is power supplied to photo sensor? • Is power supplied to one out of the two EXT TRIG/PS (NPN output)? • Is one out of the two EXT TRIG/PS grounded (PNP output)? • Are the photo sensor LEDs (if any) working correctly? • Is the sensor/reflector system aligned (if present)?
On Line Mode: the Master’s “Phase On” LED is correctly lit but nothing happens (no reading results).	• Is the software configuration consistent with the application condition (operating mode, etc.)? In the Genius™ software configuration program select the OPERATING MODES folder and check for related parameters.
Serial On Line Mode: the reader is not triggered (no reading results).	• In the Genius™ program select the OPERATING MODE folder and check if serial on line is enabled as “On Line options” parameter value. • Are the Start-Stop string correctly assigned? • Is the serial trigger source correctly connected and configured)?

TROUBLESHOOTING GUIDE	
Problem	**Suggestion**
On Line Mode and Serial On Line Mode: the reader does not respond correctly to the expected external signal end.	• In the Genius™ software configuration program select the OPERATING MODES folder and check the “Reading Phase Timeout” parameterization.

Reading:
it is not possible to read the target barcode (always returns No Read)
	• Check synchronization of reading pulse with object to read.
	• Place barcode in the center of scan line and run TEST MODE (selectable by Genius™ as Operating Modes).
	If you still have troubles, check the following:
	  • Is the reading distance within that allowed (see reading diagrams)?
	  • Choose the CODE tab and enable different code types (except Pharmacode). LENGTH = Variable.
	  • Is the barcode quality sufficient?
	• If you had no success, try to perform the test using the BARCODE TEST CHART included with the product.
	• If working in PackTrack™ mode, verify that the coordinates (in particular the Y axis) are correct.

Communication: the device is not transmitting anything to the host.	• Is serial cable connected? • Is correct wiring respected? • If using MAIN RS232 or RS485 interface, is the reference ground connected to proper SGND Main Isolated (also referred to as GND_ISO)? Be careful that it is not completely different from GND power ground. • If using CBX100/CBX500, be sure the RS485 termination switch is positioned to OFF. • Are serial host settings equivalent to serial device settings?
Communication: data do not appear on the terminal.	• In the Genius™ program enable the DATA COMMUNICATION SETTINGS/MAIN-AUXILIARY PORT\DATA TX parameter.
Communication: data transferred to the host are incorrect, corrupted or incomplete.	• In the Genius™ program select the DATA COMMUNICATION SETTINGS/DATA FORMAT folder and check for HEADER, TERMINATOR, SEPARATOR and FILL CHAR values. • Check the CODE FIELD LENGTH value, too. • Are the COM port parameters correctly assigned?

TROUBLESHOOTING GUIDE	
Problem	**Suggestion**
How do I obtain my units' serial numbers?	• The device serial number is printed on a label that is affixed above the connector panel of the reader. • The serial number is also displayed when connecting the device through the Genius™ program. • Serial numbers consist of 9 characters: one letter, 2 numbers, another letter followed by 5 numbers.

12 TECHNICAL FEATURES

ELECTRICAL FEATURES		
Supply Voltage	15 to 30 Vdc	
Power Consumption	15 W typical 1.5 to 0.7 A max. (including startup current)	
Common Communication Interfaces	**Main**	**Baud Rate**
	RS232	1200 to 115200
	RS485 full-duplex	
	RS485 half-duplex	
	Auxiliary	
	RS232	1200 to 115200
	Other	
	Lonworks	1.25 Mb/s
Model–Dependent Communication Interfaces	Ethernet DeviceNet Profibus	100 Mb/s up to 500 Kb/s up to 12 Mb/s
Inputs Ext. Trigger 1, Encoder 2 aux. digital inputs	(optocoupled NPN or PNP)	
Outputs 3 software programmable digital outputs	(optocoupled)	
OPTICAL FEATURES		
Light Receiver	Avalanche photodiode	
Wavelength	630 to 680 nm	
Safety Class	Class 2 - EN60825-1; Class II - CDRH	
Laser Control	Security system to turn laser off in case of motor slow down	
READING FEATURES		
Scan Rate	600-1200 scans/s	
Maximum Resolution Max. Reading Distance Max. Reading Width Max. Depth of Field	(see reading diagrams in par. 9.5)	
USER INTERFACE		
LCD Display	2 lines by 16 characters LCD	
Keypad	3 keys	
LED Indicators	Power On (red) Phase On (yellow) TX Data (green)	

SOFTWARE FEATURES		
Readable Codes	Interleaved 2/5 Code 39 Standard Codabar Code 128 GS1-128 (ex EAN 128) Code 93 (standard and full ASCII) EAN/UPC (including Add-on 2 and Add-on 5) GS1 DataBar (including Limited and Expanded)	
Code Selection	Up to 10 codes during one reading phase	
Headers and Terminators	Up to 128-byte headers and 128-byte terminators	
Operating Modes	On Line, Serial On Line, Automatic, Test, PackTrack™, Continuous	
Configuration Modes	Genius™ utility program	
Parameter Storage	Non-volatile internal FLASH	
ENVIRONMENTAL FEATURES		
Operating Temperature Storage Temperature Humidity	0° to +40 °C (+32° to +104 °F) -20° to +70 °C (-4° to +158 °F) 90% non condensing	
Ambient Light Immunity	3500 lux	
Vibration Resistance: EN 60068-2-6 2 hours on each axis	14 mm @ 2 to 10 Hz 1.5 mm @ 13 to 55 Hz 2 g @ 70 to 200 Hz	
Shock Resistance: EN 60068-2-27 3 shocks on each axis	30 g; 11 ms	
Protection Class – EN 60529	IP64*	
PHYSICAL FEATURES	**Standard Models**	**Oscillating Mirror Models**
Mechanical Dimensions	110 x 113 x 99 mm (4.33 x 4.45 x 3.9 in)	113 x 180 x 104.5 mm (4.45 x 7.08 x 4.11 in)
Weight	1.5 kg. (3.3 lb)	2.0 kg. (4.4 lb)

* IP50 grade for older RJ45 Ethernet versions.

A ALTERNATIVE LAYOUTS

POINT-TO-POINT

Using a Point-to-Point layout, the data is transmitted on the Main interface as well as on the Auxiliary interface. The Main interface can be selected for RS232 or RS485 full-duplex communications. Two different layouts are available according to the DS6400 reader model used for the connection.

Standard Models

When On-Line operating mode is used, the reader is activated by an External Trigger/PS (photoelectric sensor) when the object enters its reading zone. In the following case, the signal is passed to the DS6400 through the CBX100/CBX500, which also passes power to the system from the power supply (i.e. PWR-120).

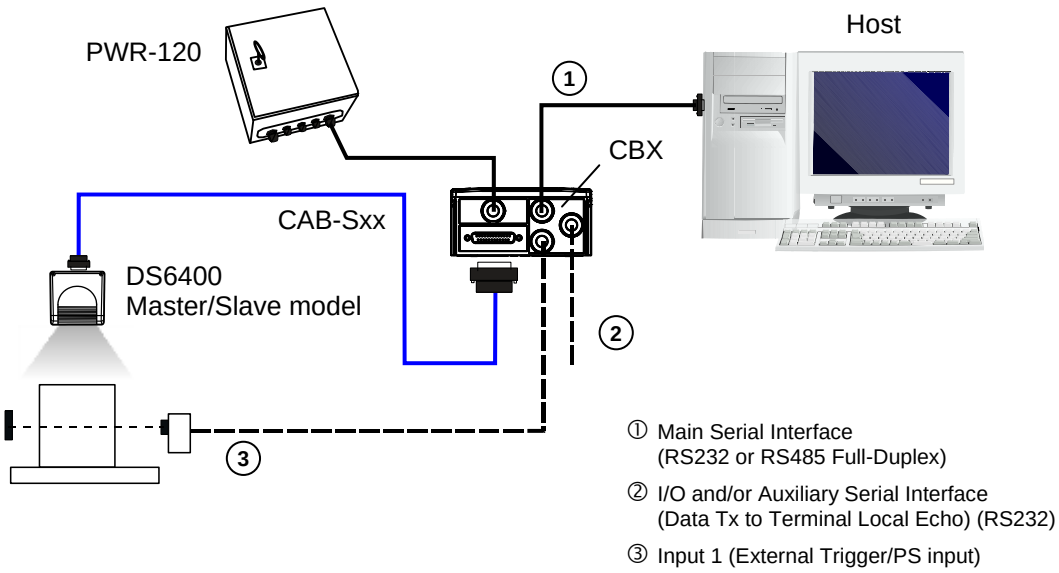

Figure 135 – Point-to-Point for Master/Slave Models

Fieldbus Models

In this case no External Trigger is used and the CBX100/CBX500 only passes power to the reader. The DS6400 Fieldbus models (Ethernet, DeviceNet or Profibus) are connected to a remote Host. It can be activated by a signal generated by the remote Host or always be active if working in Automatic operating mode.

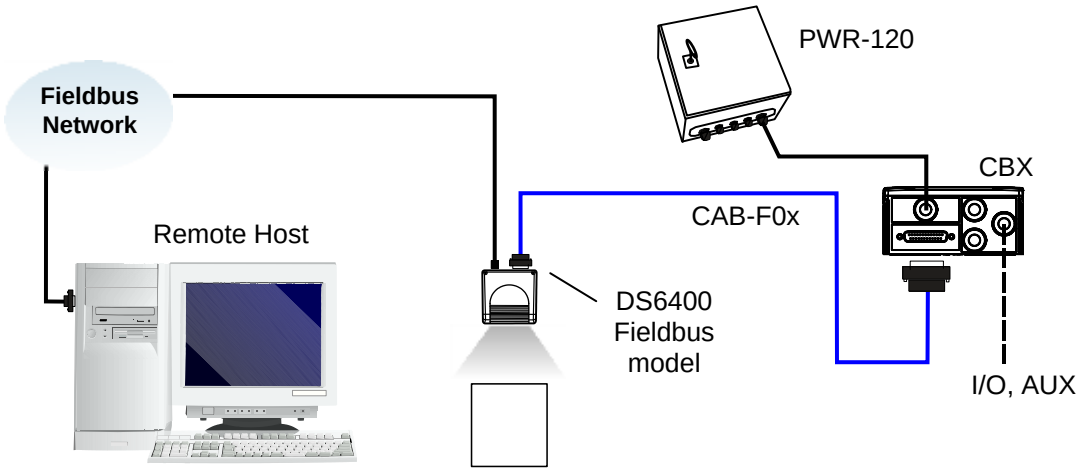

Figure 136 – Point-to-Point for Fieldbus Models

ID-NET™ GATEWAY

The CBX800 Gateway can be used to integrate a DS6400 reader into a high speed ID-NET™ network consisting of different scanners not provided with a Lonworks interface.

In this case the DS6400 uses its main RS232/RS485 interface to communicate with the CBX800.

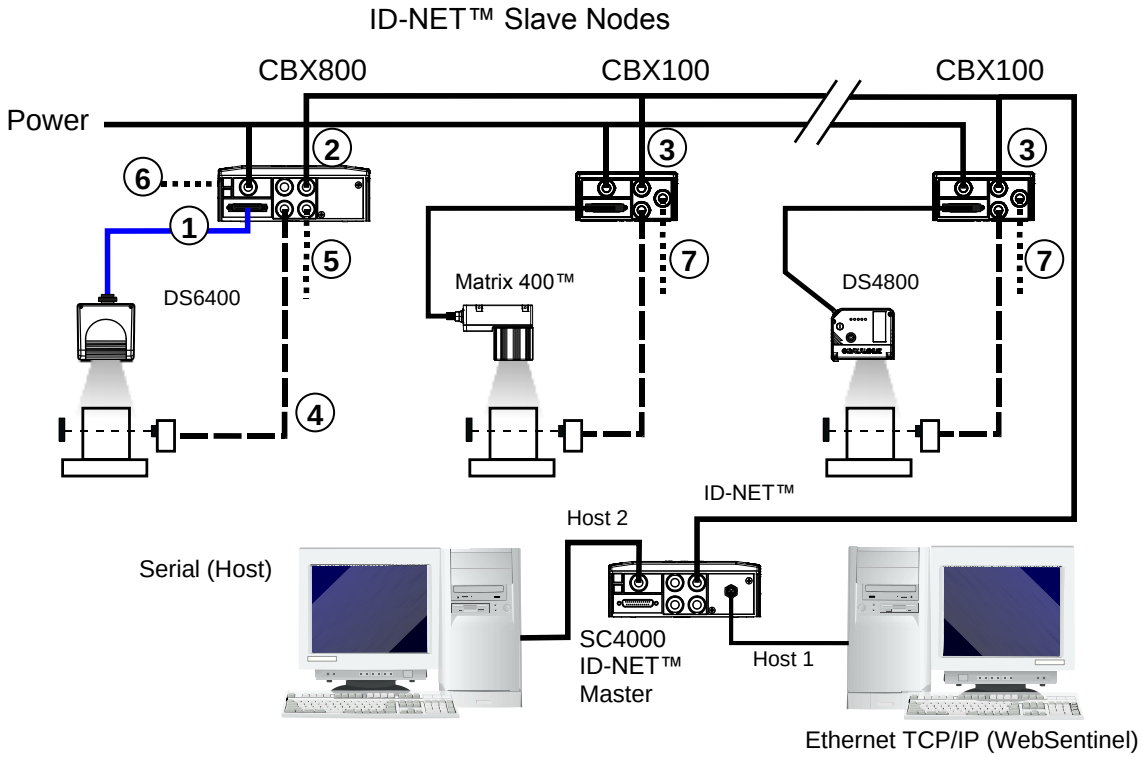

① CBX800 Source Interface (CAB-Sxx)
② CBX800 ID-NET™ Interface
③ Reader ID-NET™ Interface
④ External Trigger (for On-Line Mode)
⑤ Host Aux for CBX800 Configuration
⑥ Source Aux for Source Reader Configuration
⑦ Reader Auxiliary Interface for Reader Configuration

Figure 137 – DS6400 Slave/CBX800 Gateway in an ID-NET™ High Speed Network

NOTE

For 6K family scanners having software version 6.80 or later, an alternative fixed speed (57600 baud) ID-NET™ layout can be made without the use of the CBX800 provided:

- *the 6K scanner is only an ID-NET™ slave device*
- *the ID-NET™ master is only an SC4000 Controller*

See the ID-NET™ Application Note for details.

PASS THROUGH

When Pass Through is activated on the Auxiliary interface, the DS6400 reader can be integrated in a network consisting of different scanners not provided with a Lonworks interface.

This connection mode allows two or more devices to be connected to a single external serial interface. The DS6400 transmits the messages received by its auxiliary interface onto its main interface. The received data is transmitted "as is", (passed-through), and therefore any data formatting requirements must be made at each individual reader.

In this configuration a series of scanners can be connected together using RS232 on the main interface and all messages will be passed through this chain to the host. The reading phase of each scanner is independent from the others. In Pass Through connections each scanner is provided with its relative External Trigger (multi P.S.).

Applications can be implemented to connect a device such as a hand-held reader to the Auxiliary port for manual code reading capability.

For the RS232 connections the maximum cable length is 15 m (50 ft).

The scanners represented in the following figures are configured in Pass Through mode.

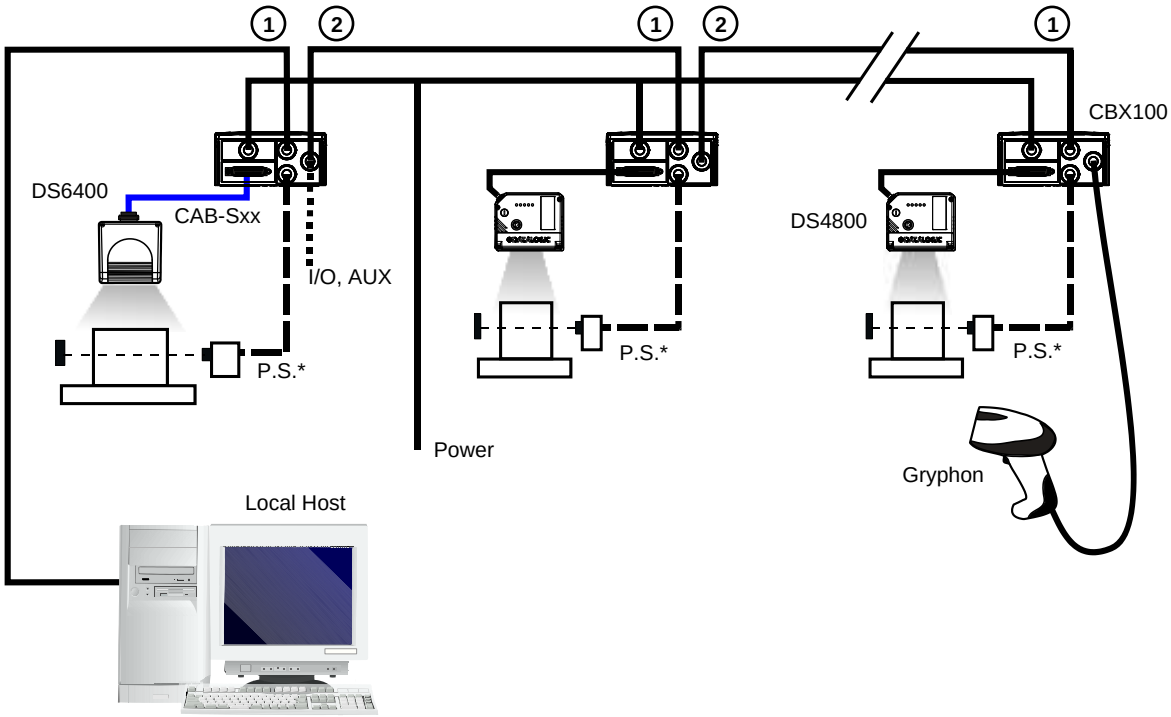

(1) Main Serial Interface

(2) Auxiliary Serial Interface

* P.S. (Presence Sensor) connected to Input 1 (External Trigger/PS) input.

Figure 138 – Pass Through Connection for DS6400 Master/Slave Models

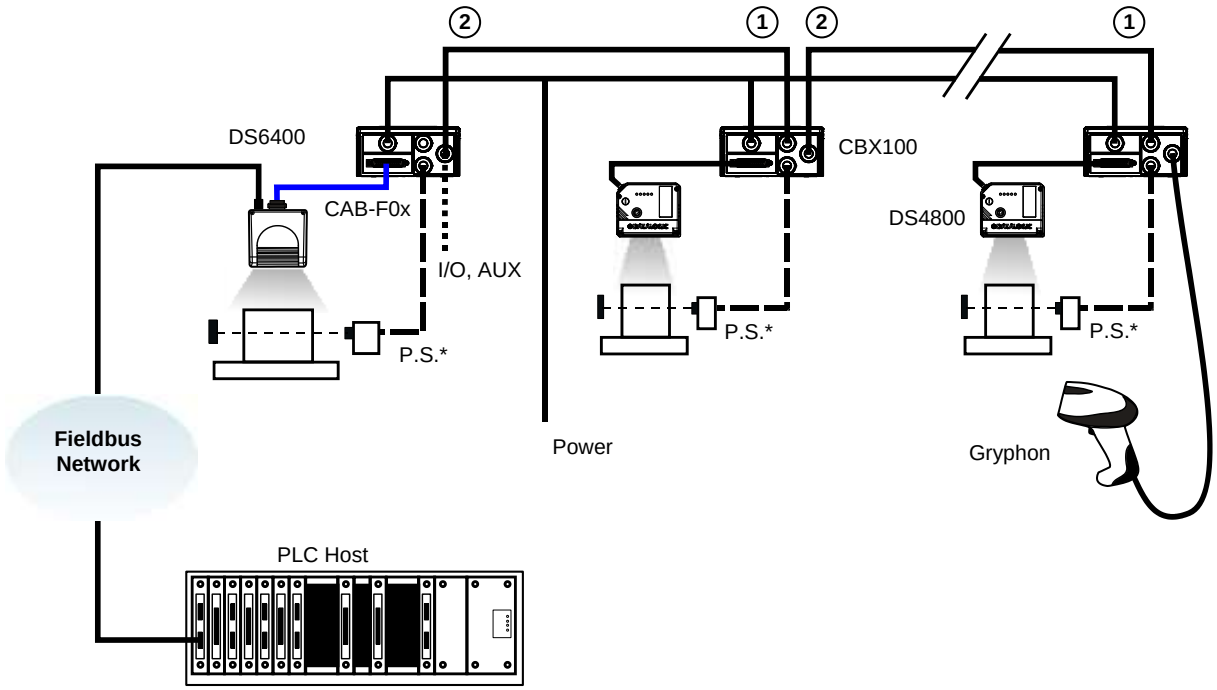

(1) Main Serial Interface (2) Auxiliary Serial Interface

* P.S. (Presence Sensor) connected to Input 1 (External Trigger/PS) input.

Figure 139 – Pass Through Connection for Fieldbus Models

RS232 MASTER/SLAVE

The RS232 master/slave connection is used to integrate a DS6400 reader in a network consisting of different scanners not provided with a Lonworks interface.

The Slave scanners use RS232 only on the main and auxiliary interfaces. Each slave scanner transmits the messages received by the auxiliary interface onto the main interface. All messages will be transferred towards the master.

The master scanner is connected to the Host PC on the main RS232 serial interface through the CBX connection box.

In RS232 Master/Slave connections the External Trigger/PS signal is unique to the system (single P.S.).

NOTE	*The **DS6400 Standard model**, working as Master in an RS232 network, may be simultaneously connected to a Lonworks network consisting of DS6400 slave scanners. Be careful when assigning the slave address, since the number of the first Lonworks slave must be a progressive number with respect to the address number defined for the last slave scanner of the RS232 network. For example, if the RS232 network consists of Slave 1 and Slave 2, the address to be assigned to the first Lonworks slave scanner will be Slave 3 (not Slave 1).*

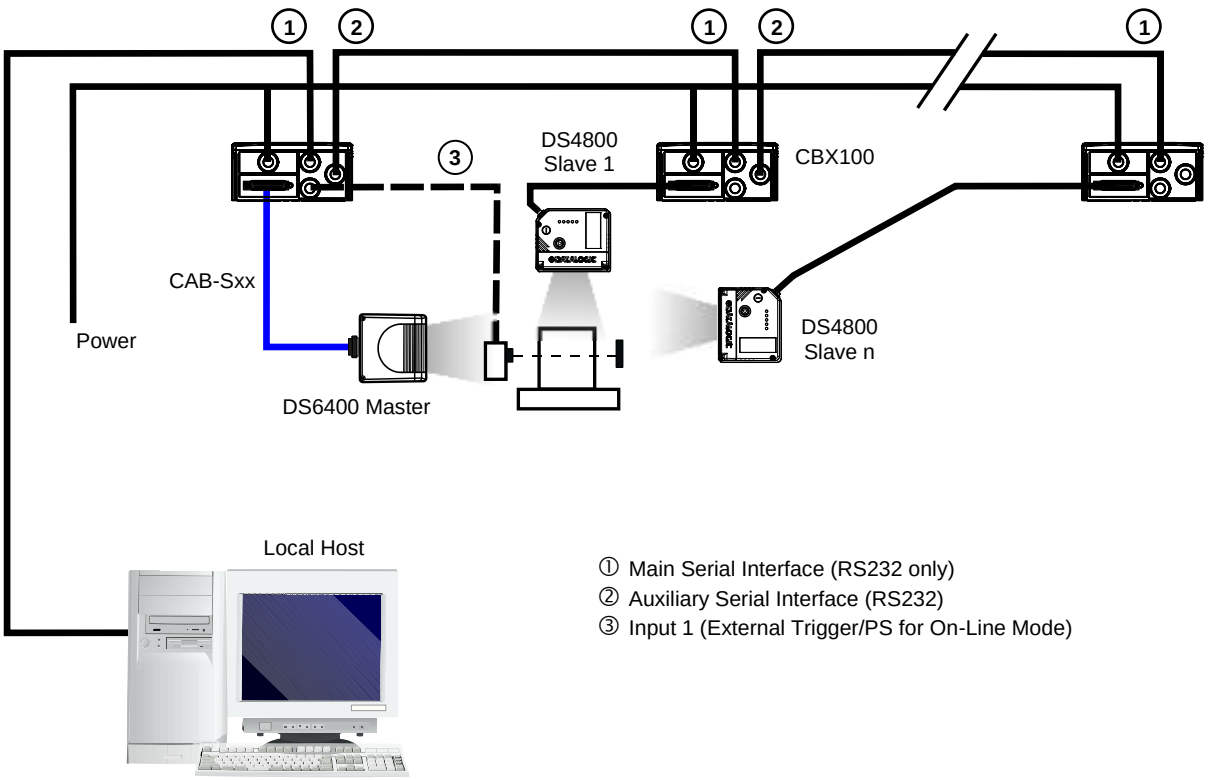

Figure 140 – RS232 Master/Slave for DS6400 Master/Slave Models

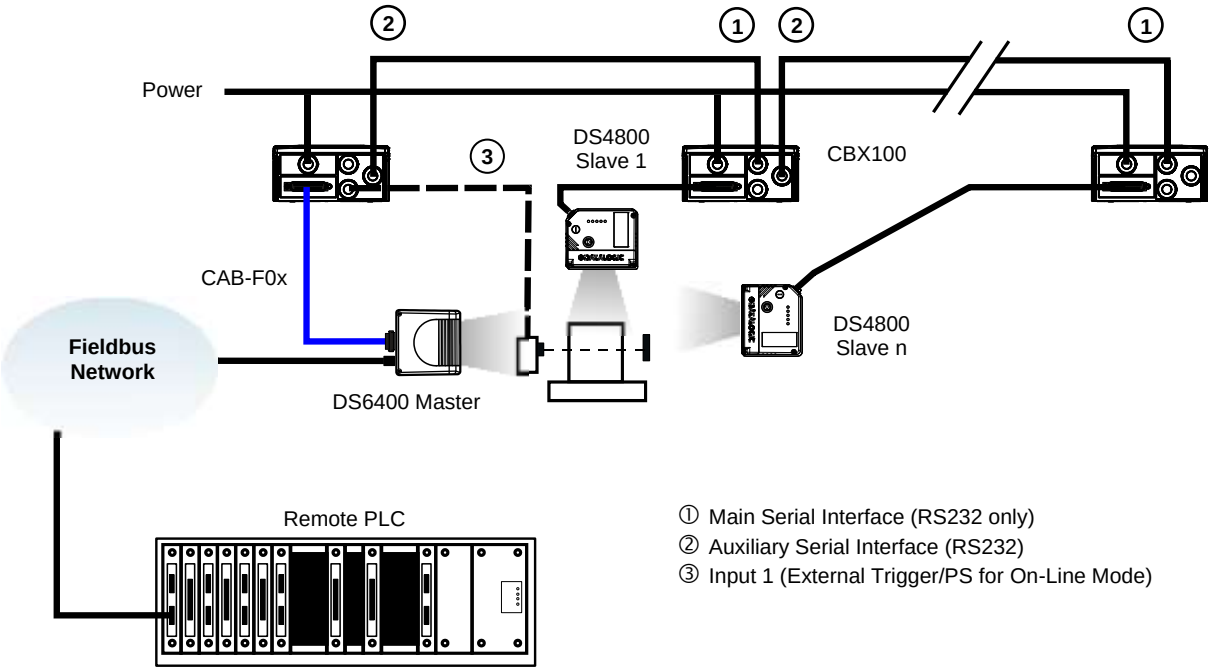

Figure 141 – RS232 Master/Slave for DS6400 Fieldbus Models

MULTIPLEXER

The Multiplexer connection is used to integrate a DS6400 slave reader in a Multidrop network consisting of different scanners not provided with a Lonworks interface.

Each scanner is connected to a Multiplexer (MX4000) with the RS485 half-duplex main interface.

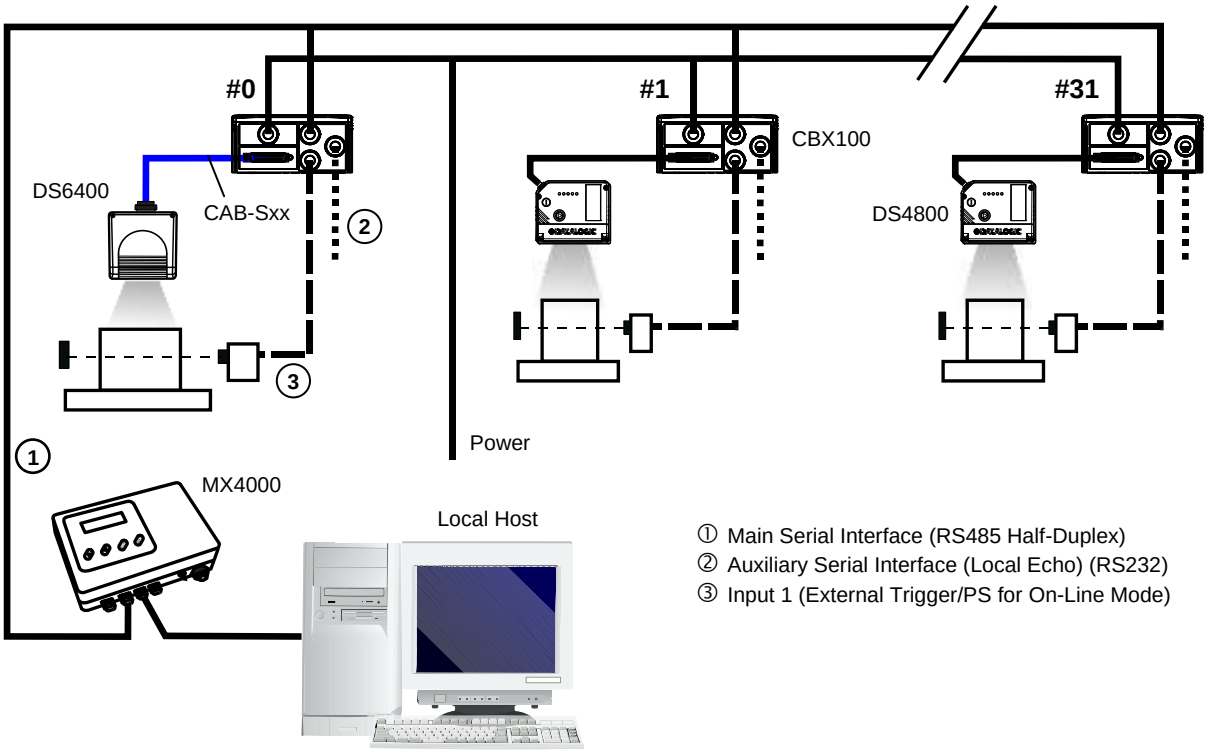

Figure 142 – Multiplexer for DS6400 Master/Slave Models

The auxiliary serial interface of the slave scanners can be used to visualize collected data or to configure it using the Genius™ utility.

When On-Line operating mode is used, the scanner is activated by an External Trigger/PS when the object enters its reading zone.

GLOSSARY

ACR™ 4

Each version of the base has the powerful code reconstruction technology (ACR™ 4). The new fourth generation ACR™ considerably increases the code reconstruction reading capability in the case of damaged or very tilted barcodes.

Aperture

Term used on the required CDRH warning labels to describe the laser exit window.

Barcode

A pattern of variable-width bars and spaces which represents numeric or alphanumeric data in machine-readable form. The general format of a barcode symbol consists of a leading margin, start character, data or message character, check character (if any), stop character, and trailing margin. Within this framework, each recognizable symbology uses its own unique format.

Barcode Label

A label that carries a barcode and can be affixed to an article.

Baud Rate

A unit used to measure communications speed or data transfer rate.

CDRH (Center for Devices and Radiological Health)

This organization (a service of the Food and Drug Administration) is responsible for the safety regulations governing acceptable limitations on electronic radiation from laser devices. Datalogic devices are in compliance with the CDRH regulations.

EEPROM

Electrically Erasable Programmable Read-Only Memory. An on-board non-volatile memory chip.

Full Duplex

Simultaneous, two-way, independent transmission in both directions.

Half Duplex

Transmission in either direction, but not simultaneously.

Host

A computer that serves other terminals in a network, providing services such as network control, database access, special programs, supervisory programs, or programming languages.

Interface

A shared boundary defined by common physical interconnection characteristics, signal characteristics and meanings of interchanged signals.

LED (Light Emitting Diode)

A low power electronic device that can serve as a visible or near infrared light source when voltage is applied continuously or in pulses. It is commonly used as an indicator light and uses less power than an incandescent light bulb but more than a Liquid Crystal Display (LCD). LEDs have extremely long lifetimes when properly operated.

Multidrop Line
A single communications circuit that interconnects many stations, each of which contains terminal devices. See RS485.

PackTrack™
PackTrack™ is a Datalogic patented parcel tracking system which improves the reading features in omnidirectional stations. In particular, PackTrack™ manages 6-sided reading systems when it is impossible to detect the real position of the code on the parcel, thus overcoming the need for external accessories essential in traditional tracking systems.

Parameter
A value that you specify to a program. Typically parameters are set to configure a device to have particular operating characteristics.

Position
The position of a scanner or light source in relation to the target of a receiving element.

Protocol
A formal set of conventions governing the formatting and relative timing of message exchange between two communicating systems.

Resolution
The narrowest element dimension which can be distinguished by a particular reading device or printed with a particular device or method.

RS232
Interface between data terminal equipment and data communication equipment employing serial binary data interchange.

RS485
Interface that specifies the electrical characteristics of generators and receivers for use in balanced digital multipoint systems such as on a Multidrop line.

Scanner
A device that examines a printed pattern (barcode) and either passes the uninterpreted data to a decoder or decodes the data and passes it onto the Host system.

Serial Port
An I/O port used to connect a scanner to your computer.

Signal
An impulse or fluctuating electrical quantity (i.e.: a voltage or current) the variations of which represent changes in information.

Symbol
A combination of characters including start/stop and checksum characters, as required, that form a complete scannable barcode.

Trigger Signal
A signal, typically provided by a photoelectric sensor or proximity switch, which informs the scanner of the presence of an object within its reading zone.

UPC
Acronym for Universal Product Code. The standard barcode type for retail food packaging in the United States.

Visible Laser Diode
A light source used in scanners to illuminate the barcode symbol. Generates visible red light at wavelengths between 630 and 680 nm.

INDEX

A

Accessories, 14
ACR™ 4, 86
Alternative Layouts, 130
Auto PackTrack
  Conditions and Limits, 9, 89
  Parameter Descriptions, 10, 90
  Report, 95
  Setup Procedure, 11, 92
  Setup using Keypad, 8
Auxiliary RS232 Interface, 32, 48

C

CBX Electrical Connections, 25
CE Compliance, ix
Cleaning, 123
Code Verifier, 37, 51
Compliance, vii
Custom Cable Electrical Connections, 41

D

DeviceNet Connector Panel, xiii
DeviceNet Interface, 61

E

Electrical Safety, vii
Ethernet Interface, 58
Ethernet Interface (older models), 59
Ethernet M12 Connector Panel, xii
Ethernet RJ45 Connector Panel, xii

F

FCC Compliance, ix
Fieldbus Connections, 58
Flash™ Dynamic Focus, 84

G

Genius™
  Advanced Configuration, 77
  Installation, 69
  Wizard for Quick Reader Setup, 69
Glossary, 137
Guide to Installation, xiv

I

ID-NET™ Gateway, 132
Indicators, 6
Inputs, 33, 48
Installation, 16
Internal Net, 7

K

Keypad and Display, 6

L

Laser Safety, vii
LEDs, 6
Local Lonworks Network Layouts, 63
Lonworks Connections, 54
Lonworks Interface, 55

M

Main Serial Interface, 27, 43
Master/Slave Connector Panel, xii
Model Description, 3
Mounting the Scanner, 17
Mounting with Accessories, 20
Multiplexer, 136

N

Network Setup, 72
Network Termination, 55

O

Operating Mode
  Automatic, 71
  On Line, 71
  Test, 70
Oscillating Mirror Models, 4
Outputs, 37, 51
Overall Dimensions, 18

P

Package Contents, 16
PackTrack™, 87
PackTrack™ Calibration
  Auto Using DLAPC, 89
  Manual Using SPY, 96
Parameter Explorer Window, 77
Parameter Groups
  Default Values, 80
Pass Through, 133
Patents, vi
Pitch Angle, 22

Point-to-Point, 130
Positioning, 22
  16° Skew Positioning, 23
  45° Skew Positioning, 24
Power Supply, viii, 27, 43
Profibus Connector Panel, xiii
Profibus Interface, 62

R

Reading Diagrams, 102
  Oscillating Mirror Models, 113
Reading Features, 84
Reference Documentation, vi
RS232 Interface, 28, 44
RS232 Master/Slave, 134
RS485 Full-Duplex, 29, 45
RS485 Half-Duplex, 30, 46

S

Scanner Assignment using Keypad, 7
Scanner Replacement, 123
Skew Angle, 22
Software Configuration, 69
Support Through The Website, vi

T

Technical Features, 128
Terminators, 55
Test Mode using Keypad, 7
Tilt Angle, 23
Troubleshooting, 125
Typical Layouts, 63

DATALOGIC

www.datalogic.com