DS4800 OM Subzero

QUICK REFERENCE GUIDE

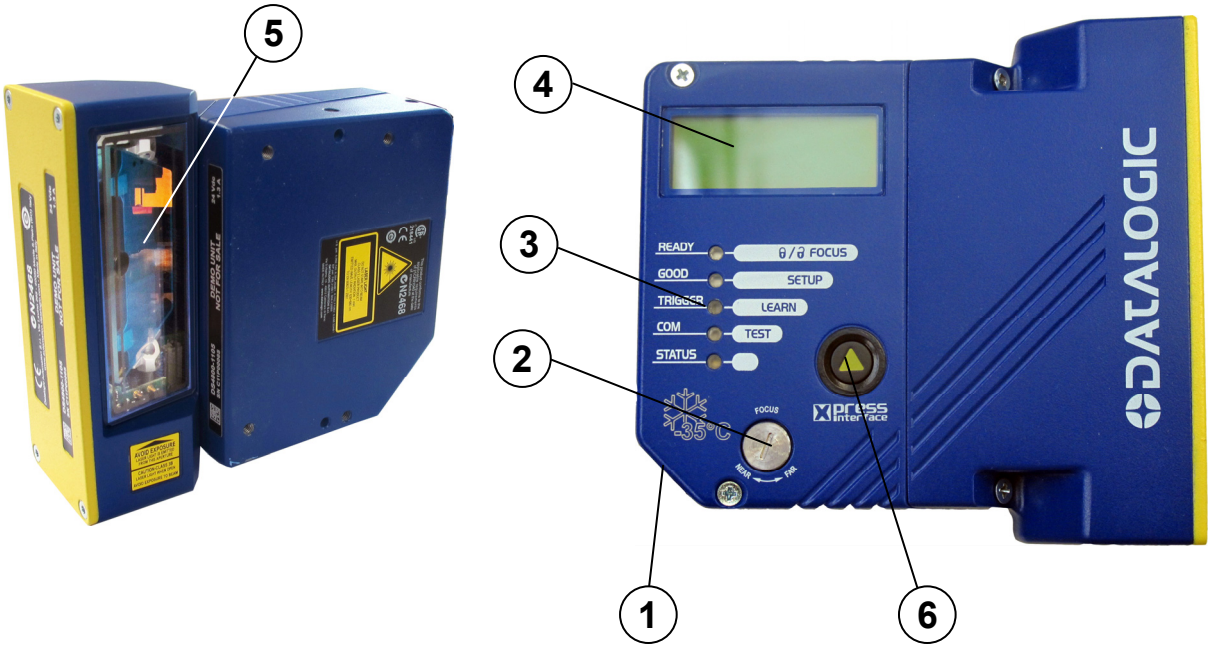

Figure A

1	"POWER ON" LED	4	Display
2	Focus Adjustment	5	Laser Beam Output Window
3	Indicator LEDs	6	Push Button

NOTE

This manual illustrates a Stand Alone application. For other types of installations, such as ID-NET™, Pass-Through, Multiplexer Layout, etc. and for a complete scanner configuration using Genius™ configuration program, refer to the DS4800 Reference Manual available on the CD. This manual is also downloadable from the Web at ***www.automation.datalogic.com****.*

821001900

UPDATES AVAILABILITY

UK/US The latest drivers and documentation updates for this product are available on Internet.
Log on to: www.automation.datalogic.com

I Su Internet sono disponibili le versioni aggiornate di driver e documentazione di questo prodotto.
Collegarsi a: www.automation.datalogic.com

F Les versions mises à jour de drivers et documentation de ce produit sont disponibles sur Internet.
Cliquez sur : www.automation.datalogic.com

D Im Internet finden Sie die aktuellsten Versionen der Treiber und Dokumentation von diesem Produkt.
Adresse : www.automation.datalogic.com

E En Internet están disponibles las versiones actualizadas de los drivers y documentación de este producto.
Dirección Internet : www.automation.datalogic.com

SERVICES AND SUPPORT

Datalogic provides several services as well as technical support through its website. Log on to **www.automation.datalogic.com** and click on the links indicated for further information:

- **PRODUCTS**

  Search through the links to arrive at your product page which describes specific Info, Features, Applications, Models, Accessories, and Downloads including the Genius™ utility program, which allows device configuration using a PC. It provides RS232 and Ethernet interface configuration.

- **SERVICE**
  - **Overview -** Warranty Extensions and Maintenance Agreements
  - **Sales Network-** Listing of Subsidiaries, Repair Centers, Partners
  - **Helpdesk**
  - **Material Return Authorization**

PRODUCT DESCRIPTION

The DS4800 OM Subzero scanner is an industrial scanner designed to operate in industrial refrigerator/freezer cells or other stable subzero degree environments, which are below the operating range of standard industrial scanners. It is not designed to move between subzero and normal environments (rapid temperature changes).
It has a patent-pending intelligent microprocessor-driven and very efficient internal heating system which constantly monitors and automatically controls internal temperature, heating only the necessary temperature-sensitive components and thereby keeping them functioning within their designed operating range even though the outside temperature is below this value. This results in very low overall power consumption. Part of this system also heats the Laser Beam Output window to eliminate ice and/or condensation build-up from negatively affecting the reading results.
Upon power-up in a subzero environment, the scanner waits until these internal components are heated to within their operating temperature range. For example, power-up at -35 °C can take about 20 minutes before the scanner is ready to read barcodes. During this time the laser, motor, and display remain off and the Ready LED blinks, indicating the warm-up phase. Scanner communication is however operative and it can be configured through Genius™ or through Host Mode Programming during this phase.
It can be connected to the CBX100 LT subzero connection box which can also withstand the same subzero environment.

STEP 1 – CONNECT THE SYSTEM

To connect the system in a Stand Alone configuration, you need the hardware indicated in Figure 1. In this layout the data is transmitted to the Host on the main serial interface. In Local Echo communication mode, the RS232 auxiliary interface can be used to transmit data independently from the main interface selection. When On-Line Operating mode is used, the scanner is activated by an External Trigger (photoelectric sensor) when the object enters its reading zone.

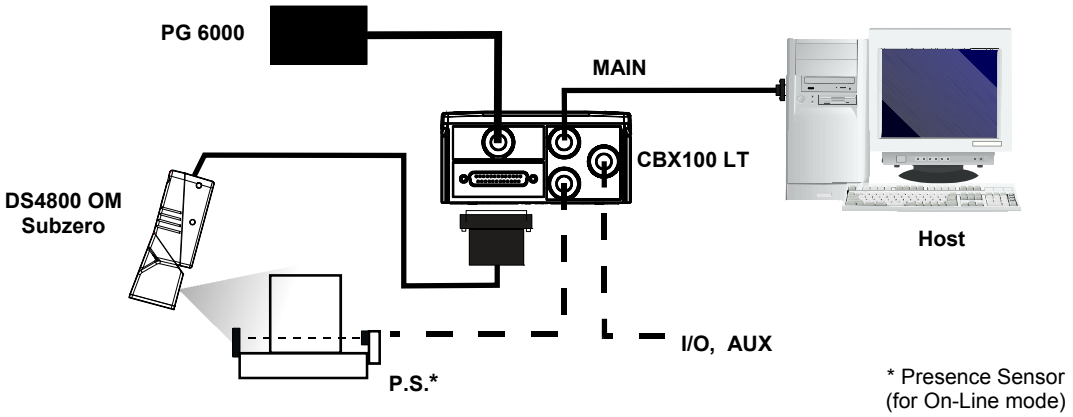

Figure 1 – DS4800 OM Subzero in Stand Alone Layout

CBX100 LT Pinout for DS4800 OM Subzero

The table below gives the pinout of the CBX100 LT terminal block connectors. Use this pinout when the DS4800 OM Subzero reader is connected by means of the CBX100 LT:

CBX100 LT Terminal Block Connectors			
Power		**Outputs**	
Vdc	Power Supply Input Voltage +	+V	Power Source - Outputs
GND	Power Supply Input Voltage -	-V	Power Reference - Outputs
Earth	Protection Earth Ground	O1+	Output 1 +
		O1-	Output 1 -
Inputs		O2+	Output 2 +
+V	Power Source – External Trigger	O2-	Output 2 -
I1A	External Trigger A (polarity insensitive)	**Auxiliary Interface**	
I1B	External Trigger B (polarity insensitive)	TX	Auxiliary Interface TX
-V	Power Reference – External Trigger	RX	Auxiliary Interface RX
+V	Power Source – Inputs	SGND	Auxiliary Interface Reference
I2A	Input 2 A (polarity insensitive)	**ID-NET™**	
I2B	Input 2 B (polarity insensitive)	REF	Network Reference
-V	Power Reference – Inputs	ID+	ID-NET™ network +
Shield		ID-	ID-NET™ network -
Shield	Network Cable Shield		

Main Interface			
	RS232	**RS485 Full-Duplex**	**RS485 Half-Duplex**
	TX	TX+	RTX+
	RTS	TX-	RTX-
	RX	*RX+	
	CTS	*RX-	
	SGND	SGND	SGND

* Do not leave floating, see Reference Manual for connection details.

CAUTION

Do not connect GND, SGND and REF to different (external) ground references. GND, SGND and REF are internally connected through filtering circuitry which can be permanently damaged if subjected to voltage drops over 0.8 Vdc.

25-pin Connector Pinout for DS4800 OM Subzero

The table below gives the pinout of the 25-pin male D-sub connector for connection to the power supply and input/output signals. Use this pinout when the DS4800 OM Subzero reader is connected by means of the 25-pin connector:

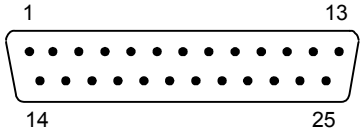

Figure 2 - 25-pin Male D-sub Connector

25-pin D-sub male connector pinout				
Pin	**Name**	**Function**		
13, 9	Vdc	Power supply input voltage +		
25, 7	GND	Power supply input voltage -		
1	CHASSIS	Cable shield connected to chassis		
18	I1A	External Trigger A (polarity insensitive)		
19	I1B	External Trigger B (polarity insensitive)		
6	I2A	Input 2 A (polarity insensitive)		
10	I2B	Input 2 B (polarity insensitive)		
8	O1+	Output 1 +		
22	O1-	Output 1 -		
11	O2+	Output 2 +		
12	O2-	Output 2 -		
20	RX	Auxiliary RS232 RX		
21	TX	Auxiliary RS232 TX		
23	ID+	ID-NET™ network +		
24	ID-	ID-NET™ network -		
14, 15, 16, 17	NC	Not Connected		
Pin	**Name**	**RS232**	**RS485 Full-Duplex**	**RS485 Half-Duplex**
2	MAIN INTERFACE (SW SELECTABLE)	TX	TX+	RTX+
3		RX	*RX+	
4		RTS	TX-	RTX-
5		CTS	*RX-	

* Do not leave floating, see Reference Manual for connection details.

STEP 2 – MOUNT AND POSITION THE SCANNER

1. To mount the DS4800 OM Subzero, use the mounting bracket to obtain the most suitable position for the reader as shown in the figures below.

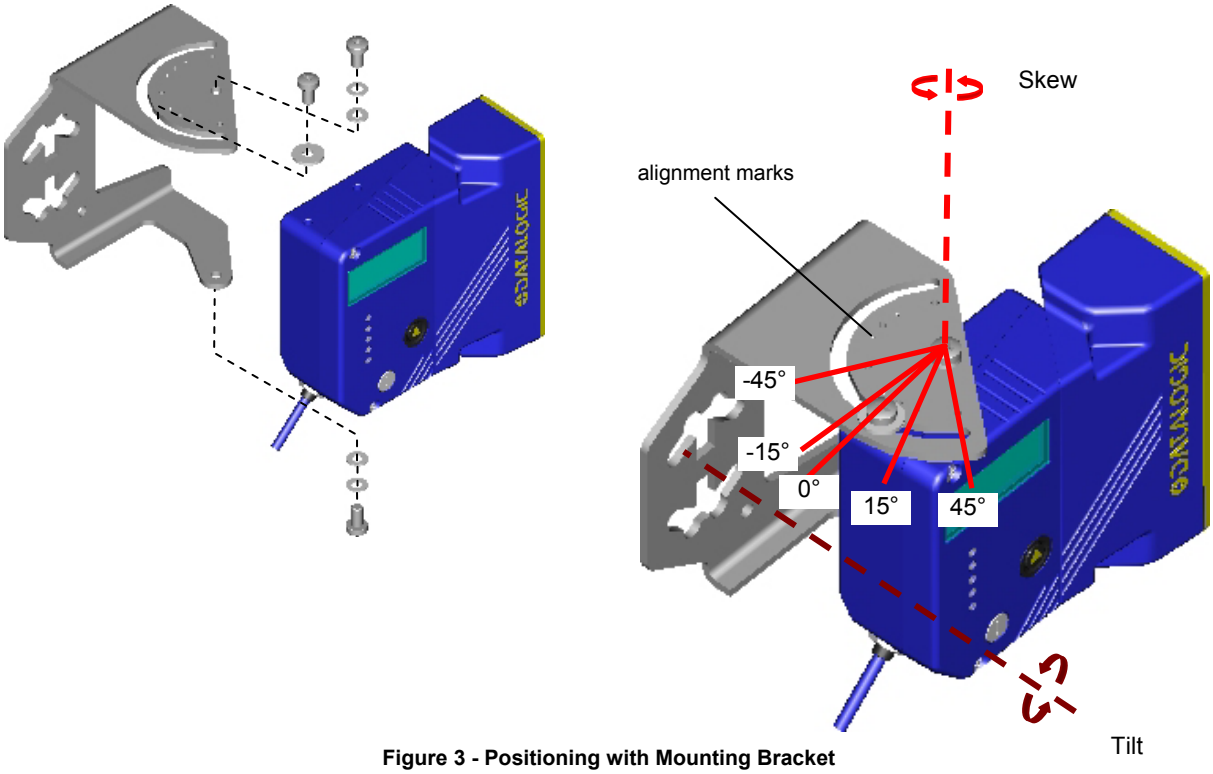

Figure 3 - Positioning with Mounting Bracket

2. When mounting the DS4800 OM Subzero take into consideration these three ideal label position angles: **Skew 15° to 30°, Tilt 0° and Pitch 0°**. The Skew angle refers to the most inclined or external raster line, so that all other raster lines assure **more** than 15° Skew.

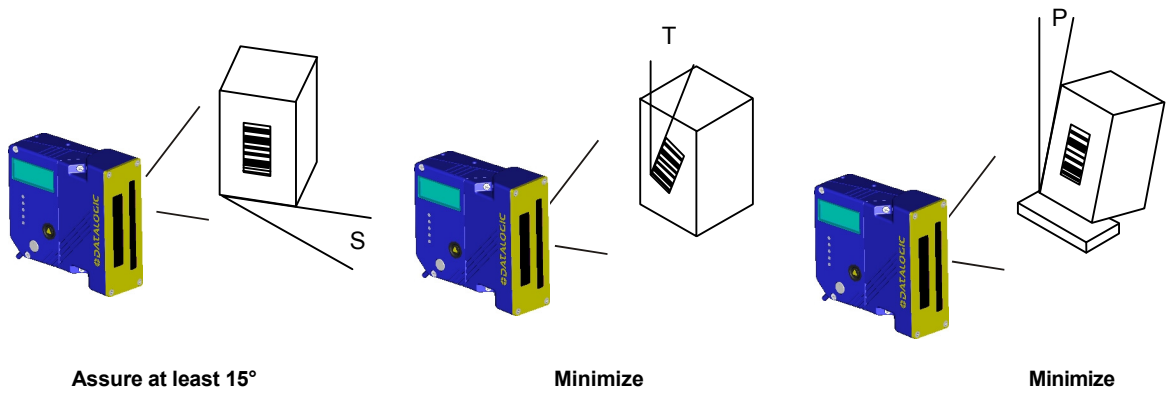

Figure 4 –Skew, Tilt and Pitch Angles

3. Refer to the Reading Diagrams in the Appendix of this Quick Reference Guide to decide the distance your scanner should be positioned at.

The DS4800 OM Subzero is completely software controlled and software programmable through Genius™ which allows adjusting the oscillating frequency and the minimum and maximum oscillation angles of two separate reading zones.

When the oscillating mirror is programmed to read barcode labels at small angles, position the reader to **assure at least 15°** for the Skew angle. This angle refers to the most inclined or external laser line, so that all other laser lines assure more than 15° Skew. This avoids the direct reflection of the laser light emitted by the reader.

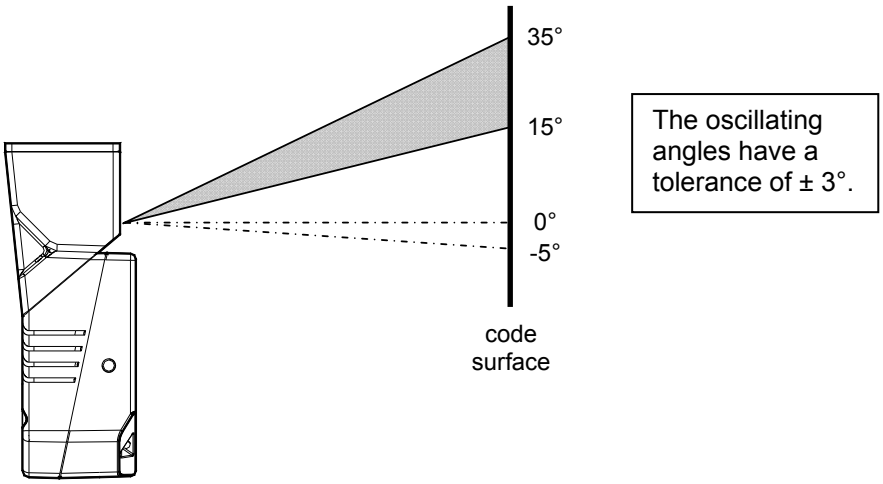

Figure 5 – Oscillating Mirror Skew Angle

Otherwise, the scanner can be mounted at an angle of inclination of 15° in order to attain symmetrical deflection ranges.

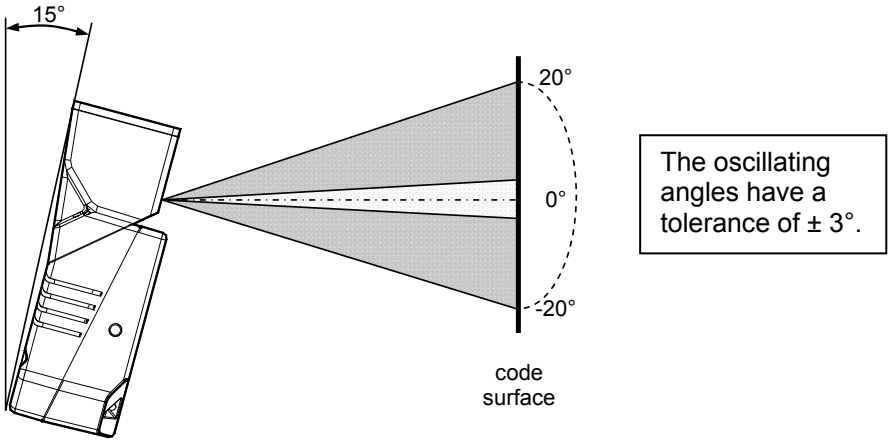

Figure 6 - Oscillating Mirror Reading Position

In the above case, the zone where the scan line is perpendicular to the reflecting surface corresponds to a neutral zone at the center of the reading field.

NOTE

By limiting the raster width to the minimum necessary, the number of scans on the reading surface is increased.

STEP 3 – FOCUS THE SCANNER

The reading distance depends on the focus distance of the scanner and should be set according to the application requirements. The Focus Position is set directly through the focus adjustment screw on the front panel of the scanner. This screw moves the internal lens of the scanner to change the focal length of the scanner. The setting is continuous but should not be set beyond the limits "Too Far" or "Too Near" which appear on the display at the extremes of the focus range. Although the scanner reads across the entire focus range, there are three guaranteed positions which correspond to the reading diagrams in the Appendix of this Quick Reference Guide.

1. Power up the scanner. **At -35 °C, a 20-minute warm-up period is required before the scanner is ready to read barcodes, the Ready LED blinks.** Wait for the power up sequence to finish. By default the scanner focus is in the Unlocked position. The alternating message on the display shows the mechanical Focus Position.
2. Using a screwdriver turn the focus adjustment screw in the desired direction clockwise (focus nearer to the scanner) or counterclockwise (focus farther from the scanner). The focus position in centimeters and inches is shown on the scanner display.

NOTE *The value of the Focus Position must be stored in memory. If the mechanical position changes by more than the allowed tolerance of the value in memory, an alarm will be sent. See the Focus Lock function in step 4, X-PRESS™ Configuration.*

As an additional visual aid during focusing, the indicator LEDs show the relative focus position as follows:

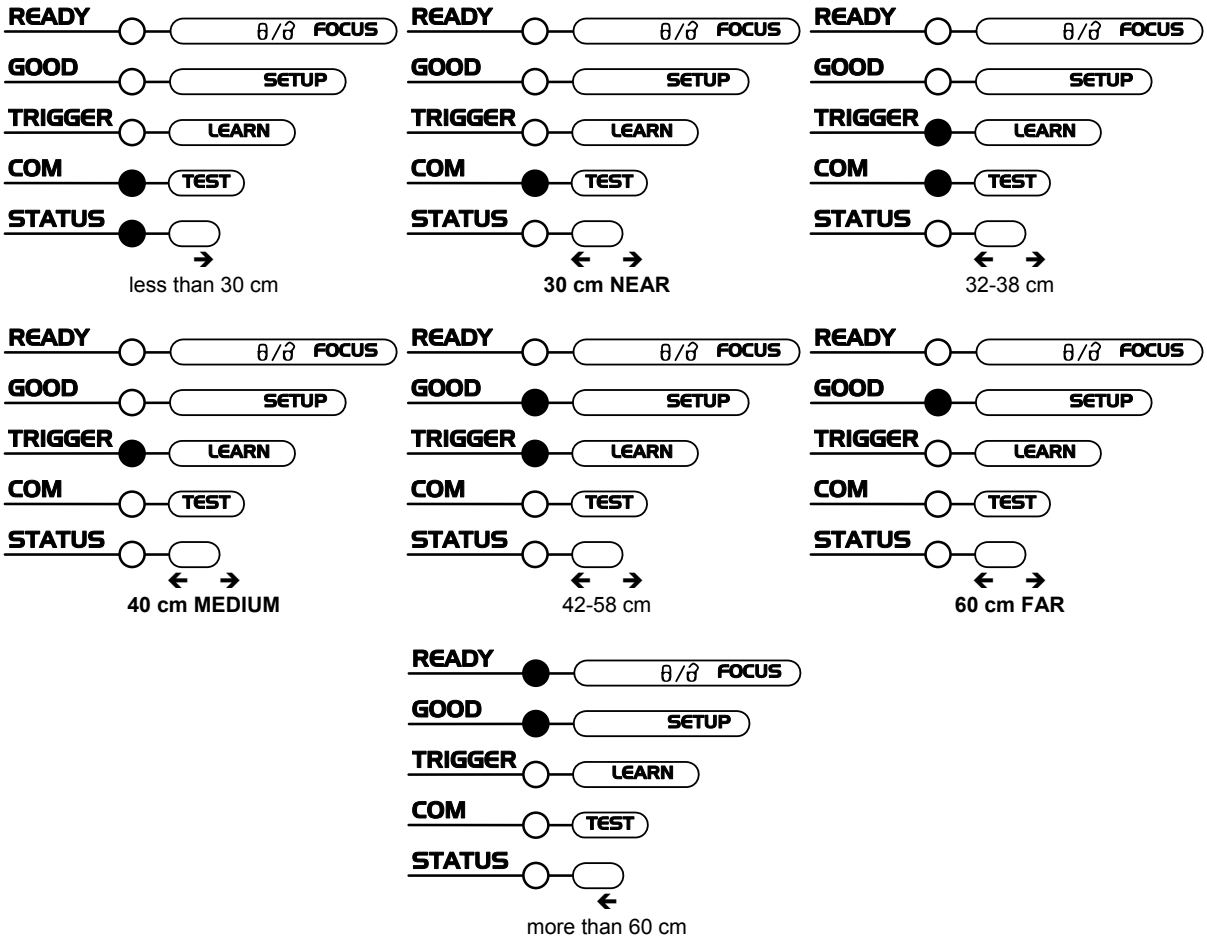

STEP 4 – X-PRESS™ CONFIGURATION

X-PRESS™ is the intuitive Human Machine Interface designed to improve ease of installation and maintenance.

Status and diagnostic information are clearly presented on the display (which can be configured in various languages) and by means of the five colored LEDs, whereas the single push button gives immediate access to the following relevant functions:

- *AutoSetup* to self-optimize and auto-configure reading performance in demanding applications
- *AutoLearn* to self-detect and auto-configure for reading unknown barcodes (by type and length)
- *Focus Lock* to memorize the mechanical focus position
- *Test Mode with bar-graph visualization to check static reading performance*

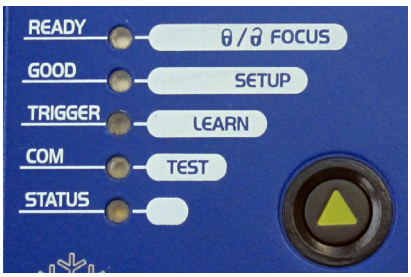

The colors and meaning of the five LEDs are illustrated in the following table:

READY (green)	This LED indicates the device is ready to operate. Blinks during warm-up phase.
GOOD (green)	This LED confirms successful reading.
TRIGGER (yellow)	This LED indicates the status of the reading phase.
COM (yellow)	This LED indicates active communication on main serial port.
STATUS (red)	This LED indicates a NO READ result.

During the reader startup (reset or restart phase), all the LEDs blink for one second.

On the back of the reader near the cable, the “POWER ON” LED indicates the laser scanner is correctly powered.

NOTE

*When entering the X-PRESS™ interface on the DS4800 Oscillating Mirror remains in the default **fixed position** (0°) in order to make barcode reading easier while performing the X-PRESS™ functions.*

AUTO LEARN

If you are configuring your scanner using X-PRESS™, you must start with the *Auto Learn* procedure.

1. Enter the *Auto Learn* function by holding the X-PRESS™ push button pressed until the LEARN LED is on.
2. Release the button to enter the *Auto Learn* function.
   Once entered, the reader starts a procedure to automatically detect and recognize barcodes (by type and length), which are presented to it (*). The laser turns on and the LEARN LED blinks to indicate the ongoing process.

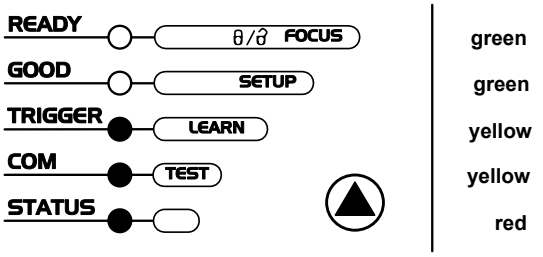

Figure 5 – X-PRESS™ Interface: Auto Learn Function

The procedure is as follows:

A) **place** the desired barcode on the scanline.

B) **wait** until the LEARN LED stays steady on (indicating the reader has detected the barcode).

C) **repeat**, if needed, the above two steps to program up to 10 different barcodes (the LEARN LED returns to the blinking state for the next code). If more than one barcode is detected in the scan line, the Multi Label mode is enabled (refer to the “2K/4K Family Software Configuration Parameter Guide” Help file).

3. **Exit** the process by pressing the X-PRESS™ push button once. The scanner will restart at the end of the process, and then the detected barcodes are automatically configured in scanner memory.

* In case of Programming Barcodes, refer to the “Setup Procedure Using Programming Barcodes” document in the product CD.

NOTE

If the barcode cannot be read because of low contrast or excessive ambient light, you can perform the AutoSetup function to optimize the optical parameters. Then you can perform AutoLearn to recognize the barcode symbology.

NOTE

On exit from Autolearn, the following parameters are forced: Code Combination = Single Label, Reading Mode = Linear. If necessary, these parameters can be changed through Genius™.

AUTO SETUP (OPTIONAL)

At the end of the *Auto Learn* procedure, you can perform the *Auto Setup* procedure to set up the reading parameters.

1. Enter the *Auto Setup* function by holding the X-PRESS™ push button pressed until the SETUP LED is on.
2. Release the button to enter the *Auto Setup* function.
   Once entered, if a barcode label is positioned in front of the scanline, the scanner automatically performs the optimal setup of the reading parameters for that specific barcode.

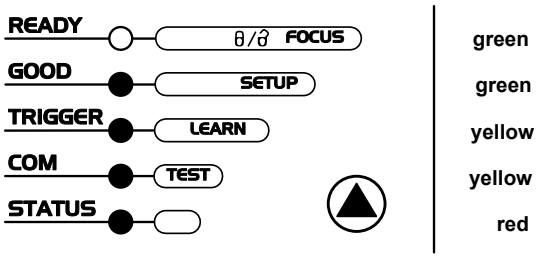

Figure 6 – X-PRESS™ Interface: Auto Setup Function

The procedure is as follows:

A) **place** the desired barcode on the scanline.

B) **enter** the AutoSetup function (the laser turns on and the SETUP LED blinks to indicate the ongoing process)

C) **wait** until the SETUP LED stays steady on (indicating the reader has detected the barcode)

This procedure ends either when the barcode is successfully decoded or after a timeout of about 7 (seven) seconds. The scanner will restart at the end of the process, and then the optimized reading parameters for that barcode are automatically configured in scanner memory.

FOCUS LOCK/UNLOCK

You must perform the *Focus Lock* procedure to save the mechanical focus position to memory. If the mechanical focus position is changed by more than the allowed tolerance of the value in memory, a diagnostic alarm will be sent to the display.

1. Enter the Focus Lock function by holding the X-PRESS™ push button pressed until the FOCUS LOCK LED is on.
2. Release the button to enter the *Focus Lock* function.
   Once entered, the scanner automatically performs the Lock (saving) or Unlock procedure depending on the previous state of the Locked Position parameter.

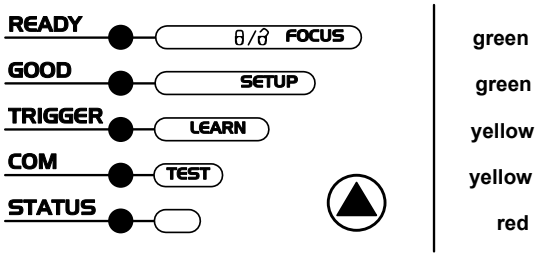

Figure 7 – X-PRESS™ Interface: Focus Lock/Unlock Function

The procedure is as follows:

A) **enter** the Focus Lock function

B) **wait** until the "Focus locked at..." message appears on the display (indicating the focus position has been saved to memory). The following parameters are set:

- Locked Position = your mechanical setting
- Focus Displacement (Alarm) = set (default to display only)

The scanner will restart at the end of the process.

NOTE

If your application has been configured using X-PRESS™, go to STEP 6.

RESET SCANNER TO FACTORY DEFAULT (OPTIONAL)

If it ever becomes necessary to reset the scanner to the factory default values, you can perform this procedure by holding the X-PRESS™ push button pressed while powering up the scanner. At the end of the procedure (about 5-6 seconds), the Configuration and Environmental parameters are reset, all LEDs blink simultaneously 3 times and the message "Default Set" is shown on the display.

STEP 5 – INSTALL GENIUS™ CONFIGURATION PROGRAM

Genius™ is a Datalogic scanner configuration tool providing several important advantages:

- Wizard approach for new users;
- Multi-language version;
- Defined configuration directly stored in the reader;
- Communication protocol independent from the physical interface allowing to consider the reader as a remote object to be configured and monitored.

To install Genius™, turn on the PC that will be used for the configuration, running Windows 98, 2000/NT, XP, Vista or 7, then insert the Genius™ CD-ROM, wait for the CD to autorun and follow the installation procedure.

This configuration procedure assumes scanner connection to a CBX100 LT. Genius™, running on a laptop computer, is connected to the scanner auxiliary port through the CBX100 LT 9-pin connector. To communicate with the scanner, Genius™ performs an auto baudrate detection starting from its default parameters which are 115200, 8, N, 1. These parameters can also be set in the Genius™ Tools>Options>Communications window.

WIZARD FOR QUICK READER SETUP

After installing the Genius™ software program the following window appears asking the user to choose the desired configuration level.

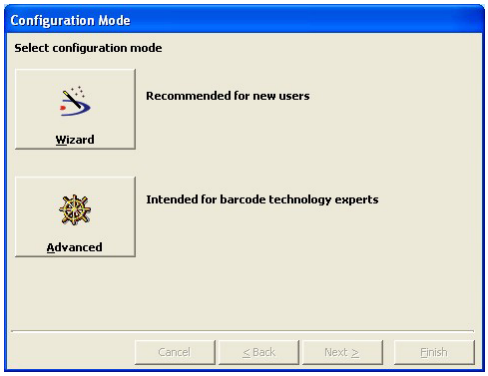

Figure 8 - Genius™ Wizard Opening Window

The Wizard option is advised for rapid configuration or for new users, since it shows a step-by-step scanner configuration.

1. Select the *Create a new configuration* button.

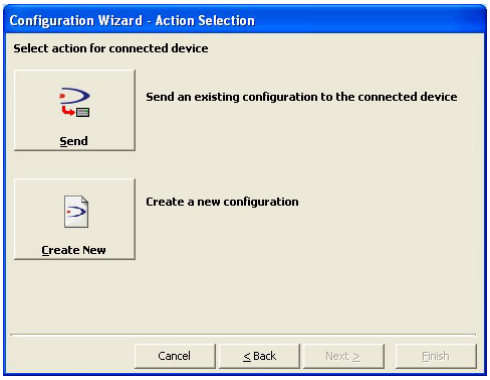

You will be guided through the configuration being asked to define the following parameters:

a. Barcode selection and definition

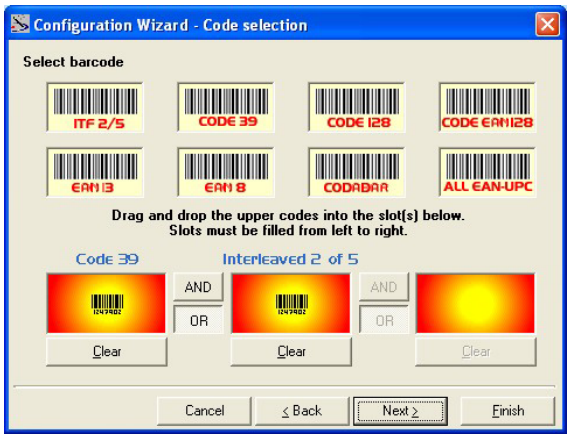

b. Operating mode selection and definition

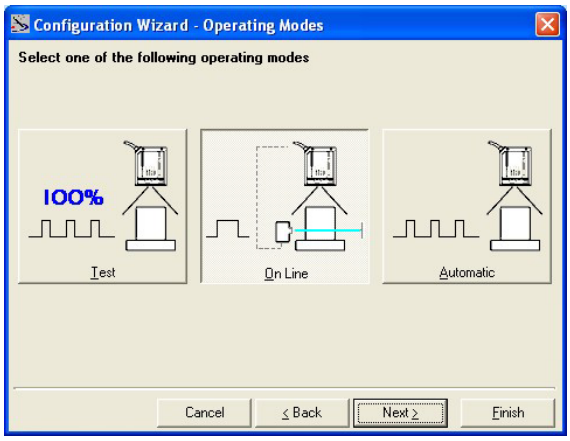

c. Digital Outputs configuration

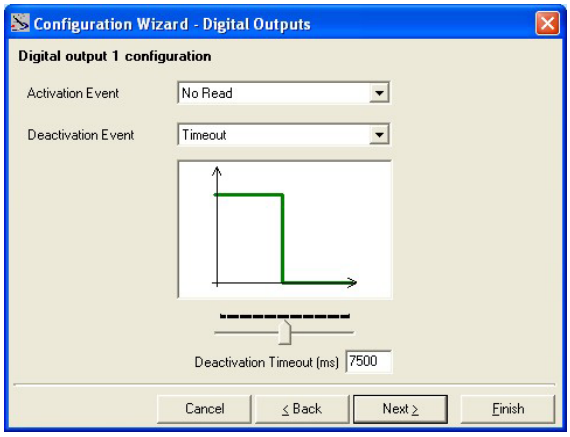

d. Hardware interface selection

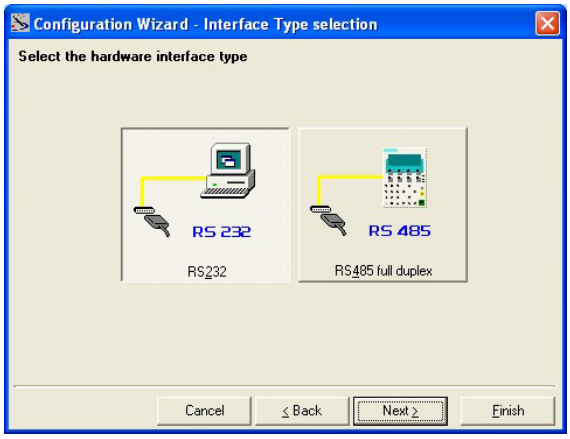

e. Output data format configuration

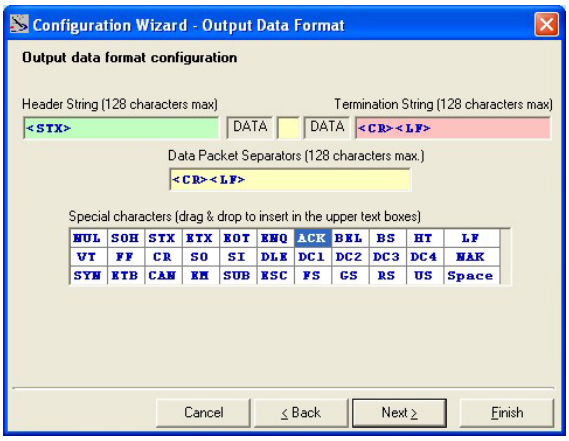

The **On Line** operating Mode requires the reader to be connected to an External Trigger/Presence Sensor using I1A and I1B inputs.

The **Automatic** operating mode does not require connection to an external Presence Sensor. When working in this mode the reader is continuously scanning, while the reading phase is activated each time a barcode enters the reader reading zone. The reader stops reading after an N number of scans without a code. Barcode characters are transmitted on the serial interface. In case of a failed reading phase no message is sent to the host computer.

2. After defining the parameter values the following window appears allowing to complete the reader configuration as follows:
   - Saving the configuration to disk;
   - Switching to Advanced mode;
   - Sending the configuration to the scanner.

3. After sending the configuration to the scanner you have completed the configuration process.

4. By clicking Finish, the System Information window will be displayed with specific information concerning the scanner.

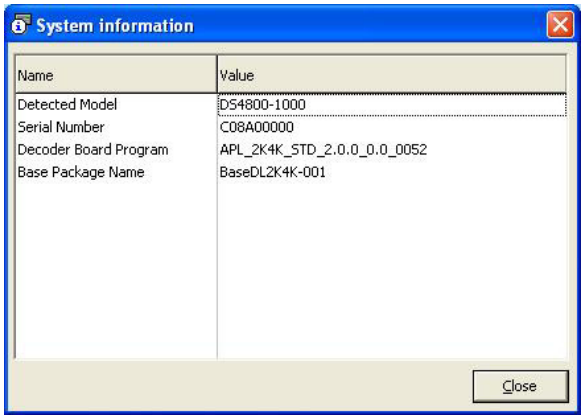

OM CONFIGURATION PARAMETERS

NOTE

The DS4800 OM Subzero scanner is configurable exclusively through the Genius™ utility program. The DS4800 scanner must have software version 004 or later.

The following software configuration parameters are available through Genius™ and described below for reference:

Oscillating Mode

This parameter defines the oscillating mode of the scanner mirror:

Selections:	**Fixed**	the oscillating mirror deflects the scan line at a fixed **Angle** (default 0°).
	Continuous	the scan line is deflected according to the **Min-Max Angle** and **Frequency** settings.

Angle (degrees)

This parameter is available only when working in **Fixed** oscillating mode.
It defines the angle in degrees with respect to the angle perpendicular to the scanner (0°) The angle tolerance is ± 3°.

Selections: a value from **-5°** to **35°**:

Min Angle (degrees)

This parameter is available only when working in **Continuous** oscillating mode.
It defines the minimum angle for the deflection range with respect to the angle perpendicular to the scanner (0°). The angle tolerance is± 3°.

Selections: a value from **-5°** to **35°**:

Max Angle (degrees)

This parameter is available only when working in **Continuous** oscillating mode.
It defines the maximum angle for the deflection range with respect to the angle perpendicular to the scanner (0°). The angle tolerance is± 3°.

Selections: a value from **-5°** to **35°**:

Frequency (Hz)

This parameter is available only when working in **Continuous** oscillating mode.
It defines the oscillating frequency in Hertz:

Selections: a value from **0.2** to **20.0** Hertz

NOTE

The maximum allowable frequency for the given oscillating amplitudes is:

30.5° to 40°	5 Hz
20.5° to 30°	7 Hz
10.5° to 20°	10 Hz
0.5 to 10°	20 Hz

Triggered

If checked, it allows assigning a trigger through which the oscillating mirror can be activated to work in a second reading zone according to the defined parameters.

Second Zone Trigger

This parameters defines the number of the input or the phase working as trigger.

Selections: **Phase** (available only when working in **On Line** operating mode)
Input 1
Input 2

Second Zone Trigger Level

This parameter allows setting the active state of the trigger. When the selected state is active, the oscillating mirror starts working in the second reading zone according to the parameters set:

Selections: **Active Open**
Active Closed

Second Zone Oscillating Mode

This parameter defines the oscillating mode of the scanner mirror to be used in the second reading zone:

Selections:	**Fixed**	the oscillating mirror deflects the scan line at a fixed **Second Zone Angle** (default 10°).
	Continuous	the scan line is deflected according to the **Second Zone Min-Max Angle** and **Second Zone Frequency** settings.

Second Zone Angle (degrees)

This parameter is available only when the second reading zone is working in **Fixed Second Zone Oscillating Mode**.
It defines the angle in degrees with respect to the angle perpendicular to the scanner (0°). The default value is 10°. The angle tolerance is ± 3°.

Selections: a value from **-5°** to **35°**:

Second Zone Min Angle (degrees)

This parameter is available only when the second reading zone is working in **Continuous Second Zone Oscillating Mode**.
It defines the minimum angle for the second zone deflection range with respect to the angle perpendicular to the scanner (0°). The angle tolerance is± 3°.

Selections: a value from **-5°** to **35°**:

Second Zone Max Angle (degrees)

This parameter is available only when the second reading zone is working in **Continuous Second Zone Oscillating Mode**.
It defines the maximum angle for the second zone deflection range with respect to the angle perpendicular to the scanner (0°). The angle tolerance is± 3°.

Selections: a value from **-5°** to **35°**:

Second Zone Frequency (Hz)

This parameter is available only when working in **Continuous Second Zone Oscillating Mode**.
It defines the oscillating frequency in Hertz for the second oscillating zone:

Selections: a value from **0.2** to **20.0** Hertz:

NOTE

The maximum allowable frequency for the given oscillating amplitudes is:

30.5° to 40°	5 Hz
20.5° to 30°	7 Hz
10.5° to 20°	10 Hz
0.5 to 10°	20 Hz

STEP 6 – TEST MODE

Use a code suitable to your application to test the system. Alternatively, you can use the Datalogic Test Chart (Code 128).

NOTE

*When entering the X-PRESS™ interface on the DS4800 Oscillating Mirror remains in the default **fixed position** (0°) in order to make barcode reading easier while performing the X-PRESS™ functions.*

1. Enter the *Test mode* function by holding the X-PRESS™ push button pressed until the TEST LED is on.
2. Release the button to enter the *Test mode* function.
   Once entered, the Bar-Graph on the five LEDs is activated and if the scanner starts reading barcodes the Bar-Graph shows the Good Read Rate. In case of no read condition, only the STATUS LED is on and blinks.

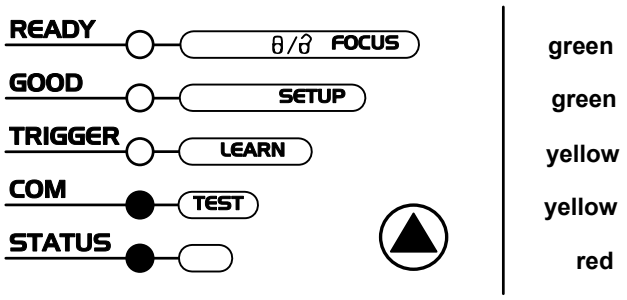

Figure 9 – X-PRESS™ Interface: Test Mode Function

3. To exit the Test Mode, press the X-PRESS™ push button once.

NOTE

By default, the Test Mode exits automatically after two minutes.

ADVANCED SCANNER CONFIGURATION

For further details on advanced product configuration, refer to the complete Reference Manual on the installation CD-ROM or downloadable from the web site at: **www.automation.datalogic.com**.

The following are alternative or advanced scanner configuration methods:

ADVANCED GENIUS™ CONFIGURATION

The ADVANCED selection available when starting the Genius™ program is addressed to expert users being able to complete a detailed scanner configuration. By choosing this option it is possible either to start a new scanner configuration or to open and modify an old one. The desired parameters can be defined in the following window, similar to the MS Explorer:

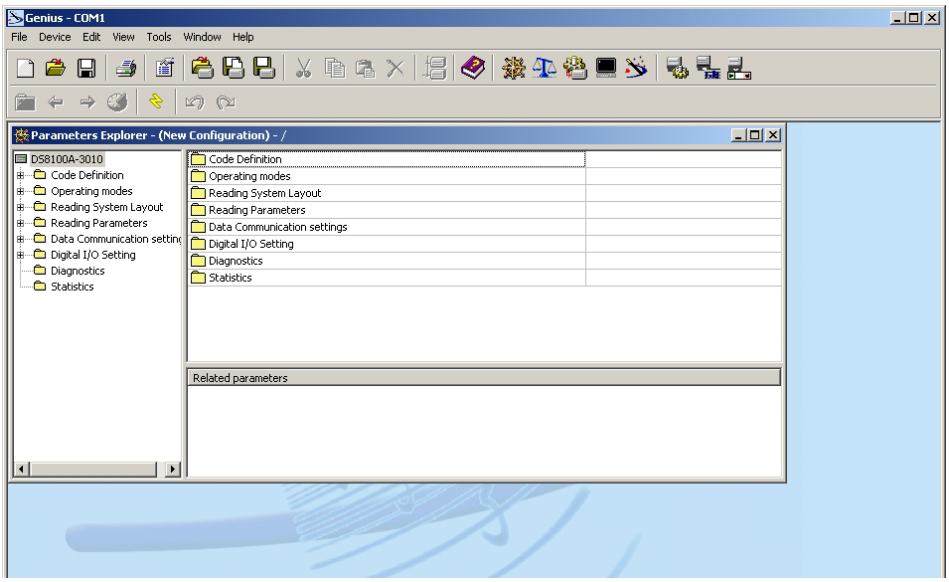

Figure 10 - Genius™ Parameter Explorer Window

HOST MODE PROGRAMMING

The scanner can also be configured from a host computer using the Host Mode programming procedure, by commands via the serial interface. See the Host Mode Programming file on the CD-ROM.

ALTERNATIVE LAYOUTS

- The ID-NET™ network is a built-in high-speed interface dedicated for high-speed scanner interconnection. ID-NET™ is in addition to the Main and Auxiliary serial interfaces. If you need to install an ID-NET™ network refer to the DS4800 Reference Manual.

  The scanner can also be configured for alternative layouts by reading programming barcodes. See the "Setup Procedure Using Programming Barcodes" printable from the CD-ROM.

- If you need to install an Ethernet network, Fieldbus network, Pass-Through network, Multiplexer network or an RS232 Master/Slave network refer to the DS4800 Reference Manual.

APPENDIX

READING DIAGRAMS

CONDITIONS

Code = Code 128
PCS = 0.90
Pitch angle = 0°
Skew angle = 15°
Tilt angle = 0° to 30°
*Scan Speed = 800 scans/sec
*Reading Conditions = Standard
*Reading Mode = Linear

* Parameter selectable in Genius™

(0,0) corresponds to the scanner output window

DS4800-1105 Focus Distance 30 cm (Near)

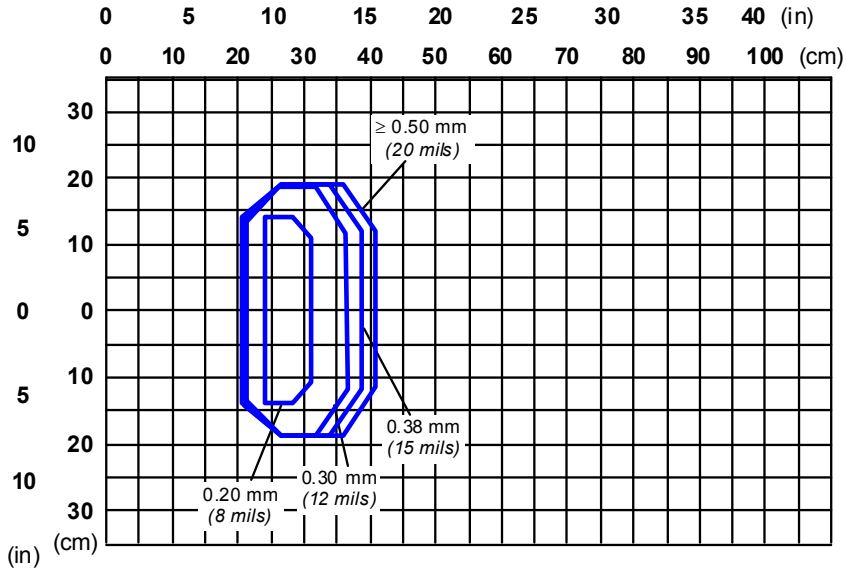

CONDITIONS

Code = Code 128
PCS = 0.90
Pitch angle = 0°
Skew angle = 15°
Tilt angle = 0° to 30°
*Scan Speed = 800 scans/sec
*Reading Conditions = Standard
*Reading Mode = Linear

* Parameter selectable in Genius™

(0,0) corresponds to the scanner output window

DS4800-1105 Focus Distance 40 cm (Medium)

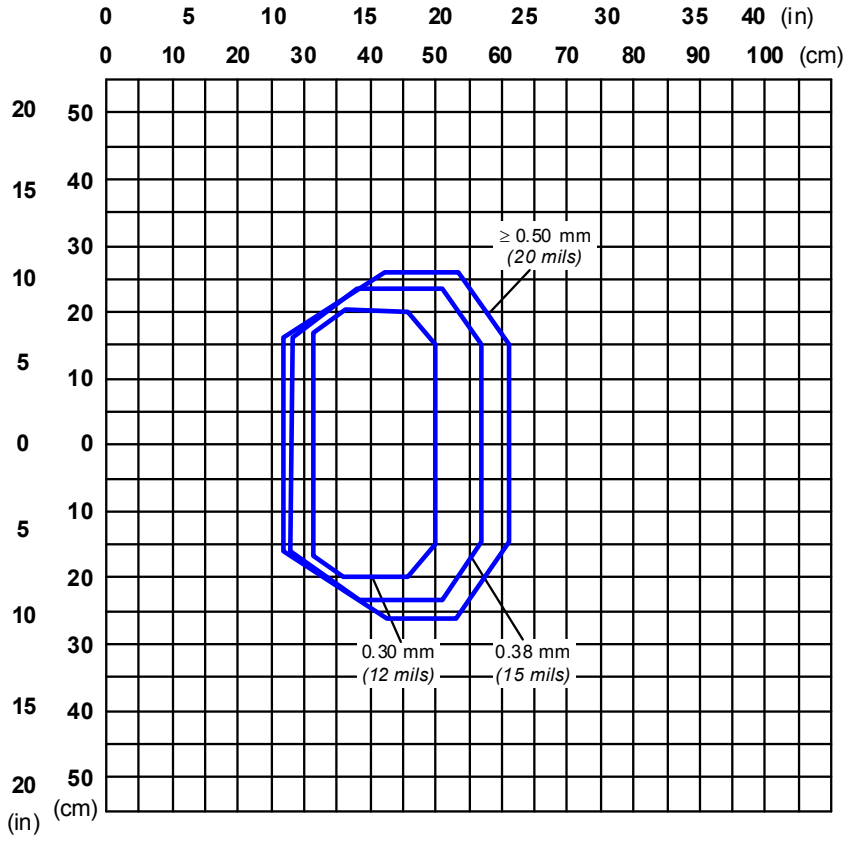

CONDITIONS

Code = Code 128
PCS = 0.90
Pitch angle = 0°
Skew angle = 15°
Tilt angle = 0° to 30°
*Scan Speed = 800 scans/sec
*Reading Conditions = Standard
*Reading Mode = Linear

* Parameter selectable in Genius™

(0,0) corresponds to the scanner output window

DS4800-1105 Focus Distance 60 cm (Far)

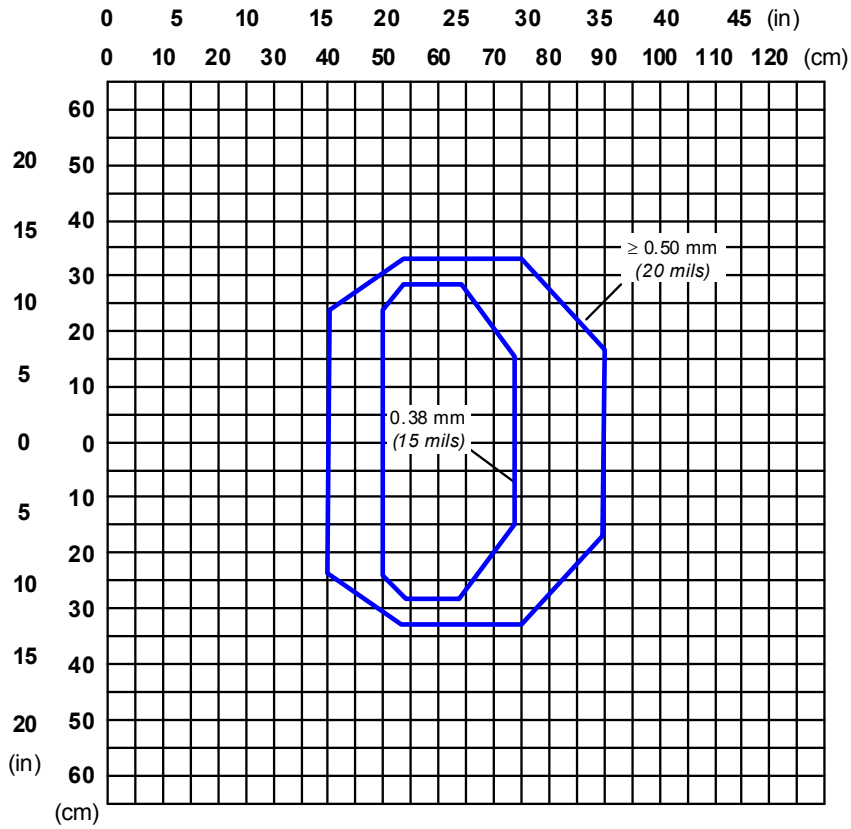

READING PERFORMANCE

Version	Reading Distance	Max Code Resolution mm (mils)	Speed scans/s
F = 30 Near	20 cm (7.9 in) - 43 cm (16.9 in) on 0.50 mm (20 mils) codes	0.20 (8)	800
F = 40 Medium	26 cm (10.2 in) - 64 cm (25.2 in) on 0.50 mm (20 mils) codes	0.30 (12)	800
F = 60 Far	39 cm (15.4 in) - 95 cm (37.4 in) on 0.50 mm (20 mils) codes	0.38 (15)	800

TECHNICAL FEATURES

ELECTRICAL FEATURES	
Power Supply	24 Vdc ±10%
Max. Consumption	1.3 A; 31.2 W
Main Serial Interfaces **Baud Rate**	Programmable: RS232, RS485 FD and HD 1200 to 115200
Auxiliary Interface **Baud Rate**	RS232 1200 to 115200
ID-NET™ Interface **Baud Rate**	RS485 Half Duplex Up to 1Mbaud
Inputs **Input 1 (External Trigger), Input 2** **Voltage** **Current Consumption** **Minimum Pulse Duration**	 Optocoupled, polarity insensitive 10 to 30 Vdc 12 mA max. 5 ms
Outputs **Output 1, Output 2** **V_{CE}** **Collector Current** **$V_{CE\ Saturation}$** **Power Dissipation**	 Optocoupled 30 Vdc max. 40 mA continuous max.; 130 mA pulsed max. 1V max. at 10 mA 80 mW max. at 45 °C (ambient temperature)
OPTICAL FEATURES	
Light Source	Semiconductor laser diode
Wavelength	In the range 630 to 680 nm
Product Safety Class	Class 2 – IEC 60825-1; CDRH
READING FEATURES	
Scan Rate (software programmable)	600 to 900 scans/sec
Aperture Angle	50°
Oscillating Amplitude	40° (-5° to 35°)
Oscillating Frequency	0.2 to 20 Hz; 5 Hz max @ 40°; 20 Hz max @ 10°
Maximum Reading Distance Maximum Resolution	See reading diagrams
ENVIRONMENTAL FEATURES	
Operating Temperature ①	-35° to +50 °C (-31° to +122 °F)
Storage Temperature	-35° to +70 °C (-31° to +158 °F)
Humidity max.	90% non condensing
Vibration Resistance EN 60068-2-6	14 mm @ 2 to 10 Hz; 1.5 mm @ 13 to 55 Hz; 2 g @ 70 to 200 Hz; 2 hours on each axis
Shock Resistance EN 60068-2-27	30 g; 11 ms; 3 shocks on each axis
Protection Class – EN 60529	IP65
Ambient Light Rejection	30,000 LUX
PHYSICAL FEATURES	
Dimensions	123 x 117 x 48 mm (4.8 x 4.6 x 1.9 in)
Weight	780 g (27.9 oz)
USER INTERFACE	
LED Indicators	Ready, Good, Trigger, Com, Status, Power On
Multi-function Key	X-PRESS™ button
Display	2 lines x 16 characters menu and diagnostic messages configurable in various languages

① The Operating Temperature is guaranteed under the following conditions:

- no direct ventilation on the scanner
- fixed working environment (no rapid temperature changes)

At -35 °C, a 20 min warm-up period is required before the scanner is ready to read barcodes.

MECHANICAL INSTALLATION

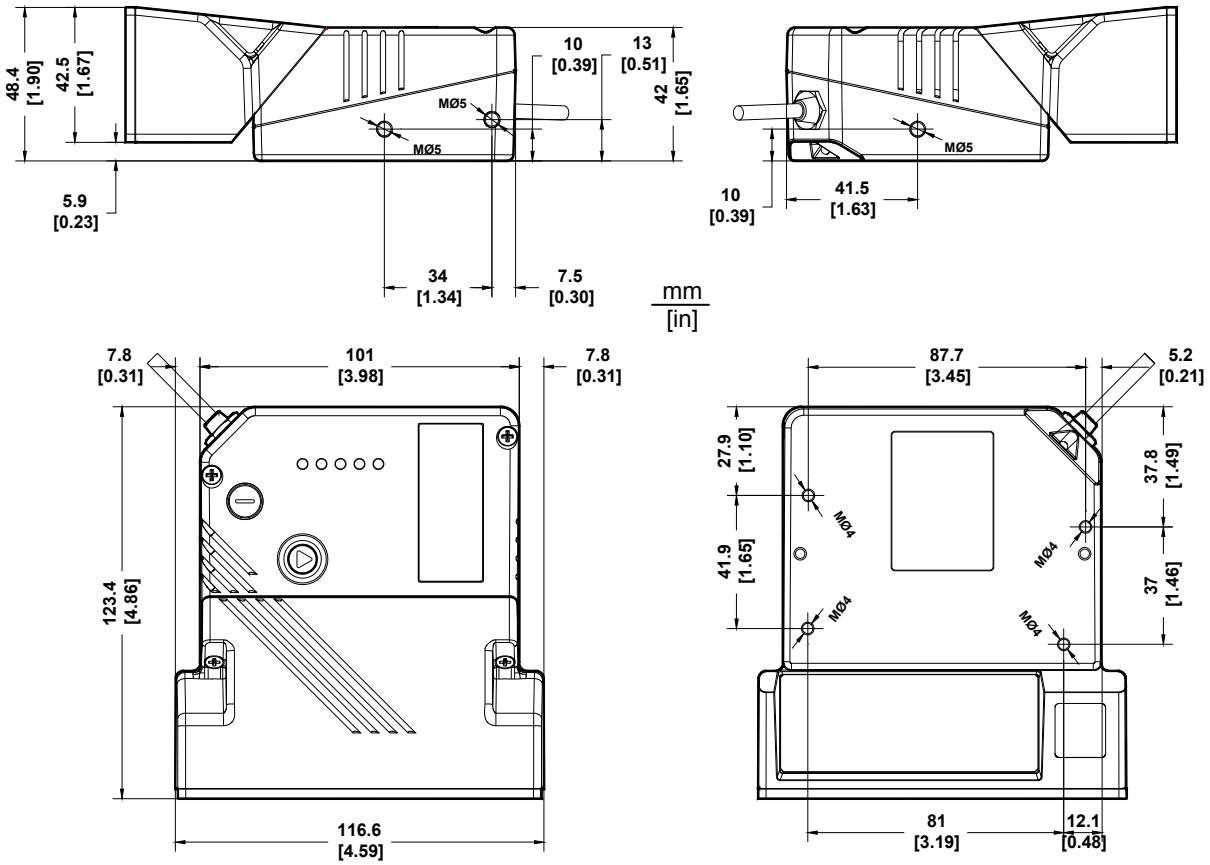

Figure 11 – DS4800 OM Subzero Overall Dimensions

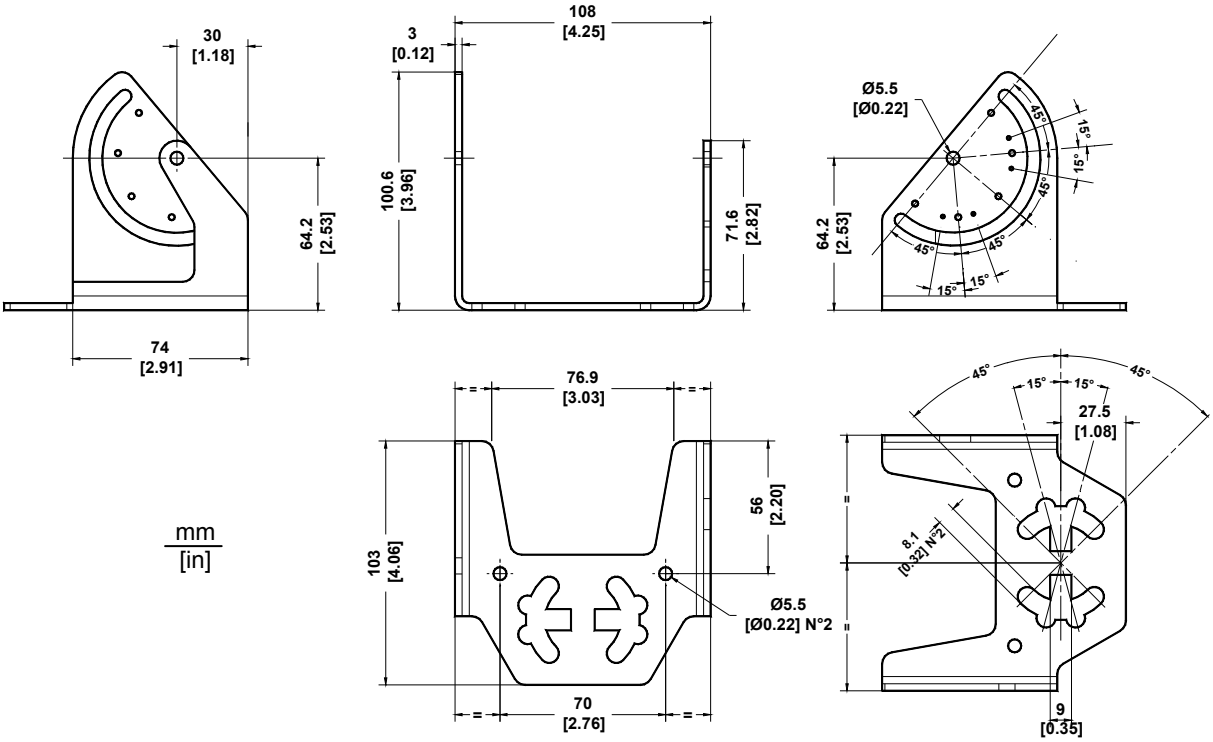

Figure 12 – Mounting Bracket Overall Dimensions

COMPLIANCE

See the DS4800 Reference Manual for the Declaration of Conformity.

LASER SAFETY

This product conforms to the applicable requirements of IEC 60825-1 and complies with 21 CFR 1040.10 except for deviations pursuant to Laser Notice N° 50, date June 24, 2007. The scanner is classified as a Class 2 laser product according to IEC 60825-1 regulations.

Disconnect the power supply when opening the device during maintenance or installation to avoid exposure to hazardous laser light.

There is a safety device, which allows the laser to be switched on only if the motor is rotating above the threshold for its correct scanning speed.

The laser beam can be switched off through a software command (see also the Genius Help On Line).

The laser diode used in this device is classified as a class 3B laser product according to EN 60825-1 regulations and as a Class IIIb laser product according to CDRH regulations.

Any violation of the optic parts in particular can cause radiation up to the maximum level of the laser diode (40 mW at 630 to 680 nm).

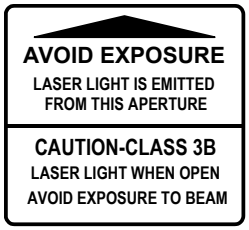

Figure 13 - Warning and Device Class Labels

FCC COMPLIANCE

Modifications or changes to this equipment without the expressed written approval of Datalogic could void the authority to use the equipment.

This device complies with PART 15 of the FCC Rules. Operation is subject to the following two conditions: (1) This device may not cause harmful interference, and (2) this device must accept any interference received, including interference which may cause undesired operation.

This equipment has been tested and found to comply with the limits for a Class A digital device, pursuant to part 15 of the FCC Rules. These limits are designed to provide reasonable protection against harmful interference when the equipment is operated in a commercial environment. This equipment generates, uses, and can radiate radio frequency energy and, if not installed and used in accordance with the instruction manual, may cause harmful interference to radio communications. Operation of this equipment in a residential area is likely to cause harmful interference in which case the user will be required to correct the interference at his own expense.

POWER SUPPLY

This product is intended to be installed by Qualified Personnel only.

This accessory device is intended to be supplied by a UL Listed or CSA Certified Power Unit with «Class 2» or LPS power source, which supplies power directly to the scanner via the 25-pin connector.

CE COMPLIANCE

Warning: This is a Class A product. In a domestic environment this product may cause radio interference in which case the user may be required to take adequate measures.

PATENTS

This product is covered by one or more of the following patents:

U.S. patents: 5,992,740; 6,394,352 B1; 6,742,710 B2; 6,688,524 B1

European patents: 789,315 B1; 959,426 B9; 1,096,416 B1.

Japanese patents: 4,376,353.

Additional patents pending.

LEGAL NOTICES

© 2011 Datalogic Automation S.r.l. ◆ ALL RIGHTS RESERVED. ◆ Protected to the fullest extent under U.S. and international laws. Copying, or altering of this document is prohibited without express written consent from Datalogic Automation S.r.l.

Datalogic and the Datalogic logo are registered trademarks of Datalogic S.p.A. in many countries, including the U.S.A. and the E.U.

ID-NET, Genius and X-PRESS are trademarks of Datalogic Automation S.r.l. All other brand and product names mentioned herein are for identification purposes only and may be trademarks or registered trademarks of their respective owners.

Datalogic shall not be liable for technical or editorial errors or omissions contained herein, nor for incidental or consequential damages resulting from the use of this material.